proj: **XENON TPC**
Xenon Pressure Chamber
title: **Pressure Safety Note**

DRAFT, for review

Prepared by:_____
Responsible Designer - Derek Shuman

Reviewed by:_____
EH&S Pressure Safety Subject Matter Expert - Joe Dionne

Approved by:_____
Engineering Division Director - Peter Denes or Designee

Table of Contents **PDF page #**

1. Introduction....1
2. System Description, Basic operation, Hazards Analysis, and Main Vessel description....3
3. Basic System Calcs, (Stored Energy, Xe Mass, Reclamation Cyl. Pressure Calculation)....6
4. Vacuum Valve....9
5. Spool, with CF Flange calculations....11
6. Octagon....20
7. Source insertion tube....23
8. Gas System....24
9. Test Procedures....30
10. Appendix....34
Main Pressure Vessel Pressure Tests (LLNL)....35
Main Pressure Vessel Design Safety Note MESN-99-020-OA (LLNL)....47
Gas Delivery System and Reclamation Cylinder Safety Note MESN99-38--OA (LLNL)....186
LLNL Note on use of CF flanges for pressure Applications....249
ANL Note on Tightening of CF flanges for Pressure Use....264
Pressure Test Reports for Spool, Octagon, Source Tube, Gas System....272-281

1. Introduction

This Safety Note covers a pressure vessel and associated inert gas system for a physics research experiment involving neutrinoless double beta decay, using Xenon gas. The heart of the system is a pressure vessel recently acquired by LBNL from LLNL. There are new components both purchased, and LBNL designed (in accordance with ASME Boiler and Pressure Vessel Code Section VIII, Div. 1, 2007), which will be attached to this pressure vessel, which are treated in this note. This Safety Note is to assure that the Experiment meets LBNL Pressure Safety requirements of PUB-3000. Under PUB3000, sec 7.6.1, it is classified as a High Hazard Pressure System, since there are gas pressures above 150 psig. An AHD is not required for the Xenon or Argon gases, nor any of the other materials inside, but there may be pressure and process hazards, so an AHD will be formulated.

The pressure vessel will enclose a small detector called a Time Projection Chamber (TPC) with Xenon gas used as both the electron drift volume and for electrical insulation. The vessel was designed by LLNL, and used at LLNL from 2000-2009 for a similar purpose, and has not been modified from the original design. LLNL Mechanical Engineering Safety Note MESN99-020-OA (1999) contains the vessel design calculations, performed in accordance with ASME Boiler and Pressure Vessel Code Section VIII (1995), and is included here in the Appendix. It includes pressure testing procedures. Also included is a copy of the original pressure test at LLNL for the vessel and head. The attached components consist of a 2" diameter high vacuum/high pressure valve, a Kimball physics octagonal vacuum chamber, a spool connecting the octagon to the vessel lid, assorted cabling feedthroughs, and a gas handling system composed of small diameter high pressure metal tubing, purifiers, valves, and pumps. The gas system includes a cryogenic Xenon reclamation cylinder, which was designed, built, and tested by Acme Cryogenics for LLNL, for 3000 psi MOP. We will be using it here at LBNL up to a pressure of 950 psi MOP. Its design calculations and test report are also included in the Appendix (LLNL M.E. Safety Note MESN99-038-OA). The pressure vessel is shown below:

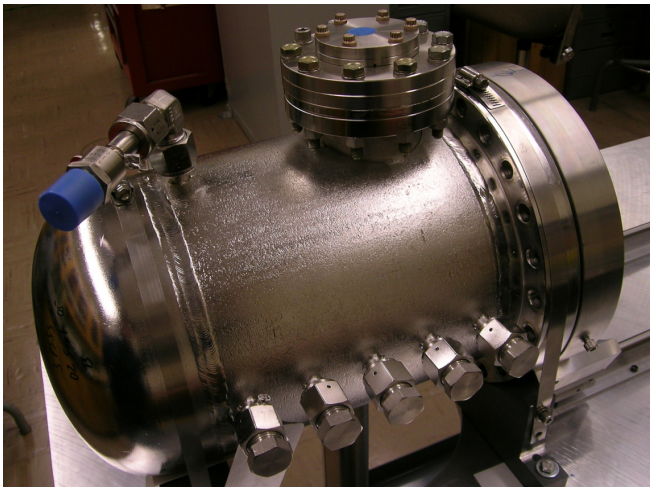

Fig. 1 Main pressure Vessel, 850 psig MOP

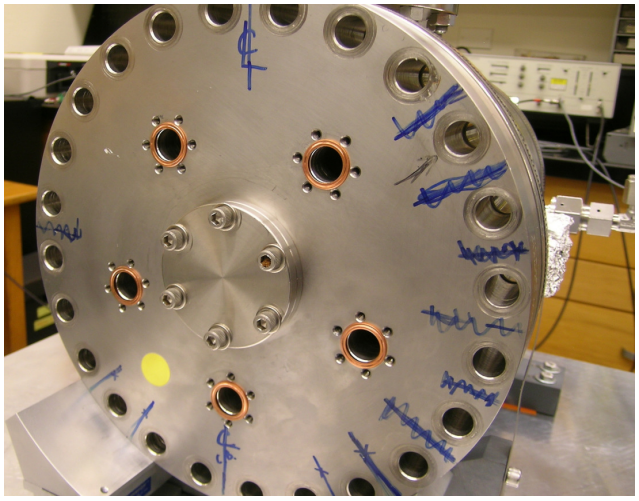

Fig. 2 Flat Heat for 350 psig MOP (CF seals)

Pressures for use at LBNL

Maximum Operating Pressure Maximum Allowable Working Pressure

$P_{MOP} := 300psi$ $P_{MAWP} := 350psi$

Initial Maximum Operating and Allowable Working Pressures (to be used initially with existing Ceramtec SHV-20 connectors (see below) until higher rated feedthroughs are obtained)

$P_{MOP_i} := 225psi$ $P_{MAWP_i} := 250psi$

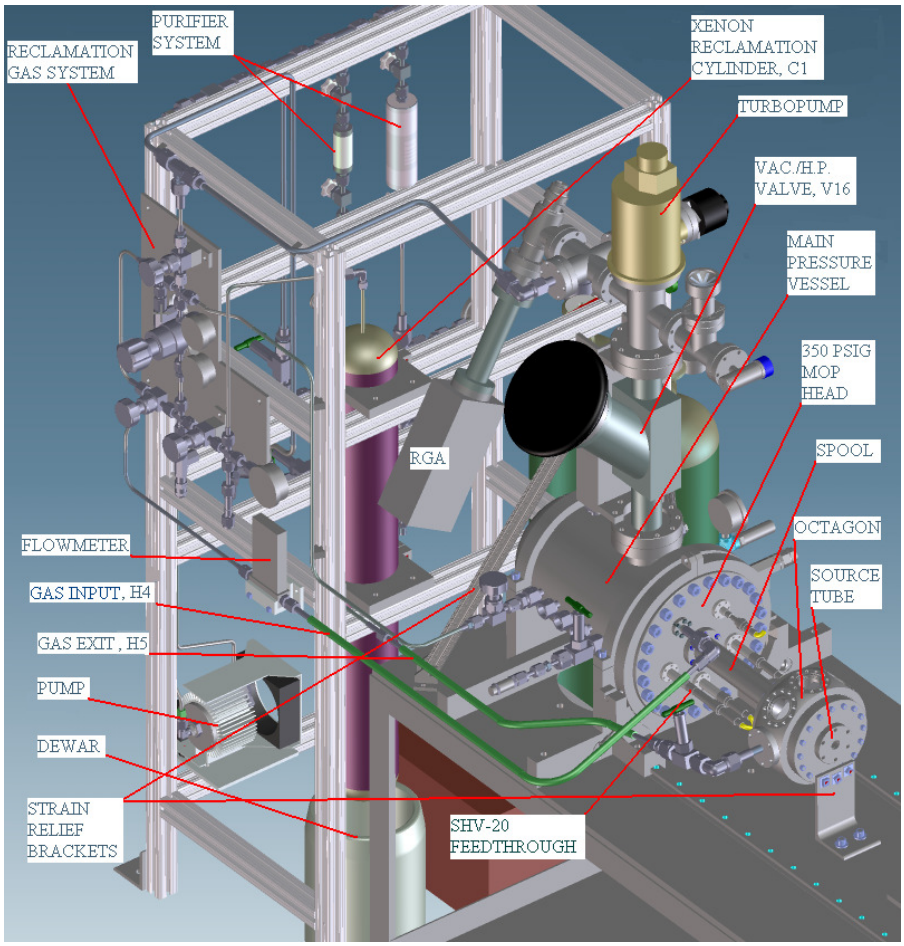

Fig. 3 LBNL configuration: pressure vessel with cabling extension spool, octagon vac. cham. & gas sys.

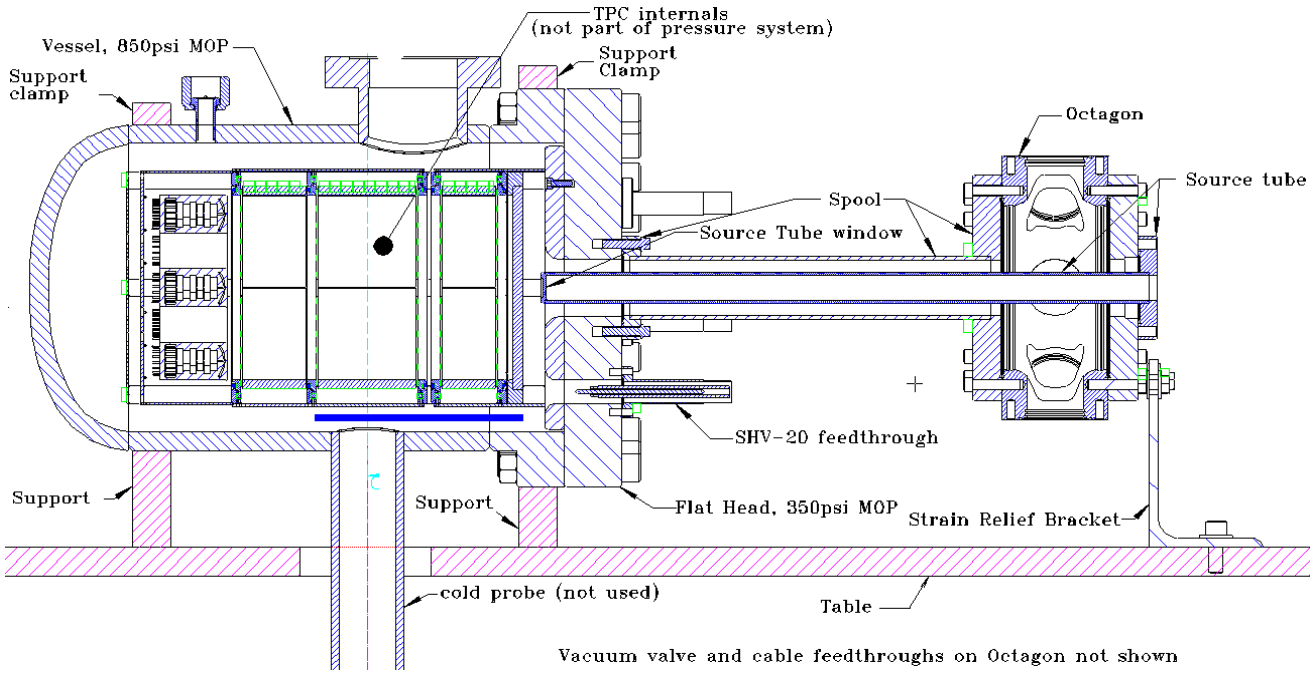

Fig. 4, Cross Section, longitudinal-vertical

2. System Description and Basic Operation

The main pressure vessel is approximately 8 inches in diameter and 14 inches long, (inside volume), and fabricated from 316L and 304 stainless steel. It will be operated at LBNL at a 300 psig maximum operating pressure (MOP), with a maximum allowable pressure (MAWP) of 350 psig. Minimum pressure is high vacuum. The main vessel was designed for operation up to 850 psig MOP, with a section of the chamber operated at LN2 temperature. There are two flat heads for it, only one of which will be used at LBNL, this head has an MAWP of 406 psig. At LBNL, the chamber will be used with inert gases only, mainly Xenon and Argon, as well as high vacuum. It will be operated only in temperature range of room temperature to 50C; the cryogenic section will not be used, and it will be labeled as such to prohibit use. An associated gas system is used to supply gas to the chamber, to pressurize and depressurize the vessel, and to circulate Xenon continuously through the detector, primarily to purify the Xenon gas to a high purity state, but also to eliminate any thermal convection currents from electronics inside the vessel. Argon may be used for initial flushing of air, H20, etc. when the vessel is first assembled, and perhaps for leak checking under pressure. A 5.4L stainless steel Xenon reclamation cylinder is used to condense/ freeze out Xenon in order to open up the vessel without venting the Xenon. It will be left open during some operations, and so is considered part of the vessel volume. The total system stored energy is 54 kJ for either of these monatomic gasses @MAWP = 350 psig. A schematic is shown below:

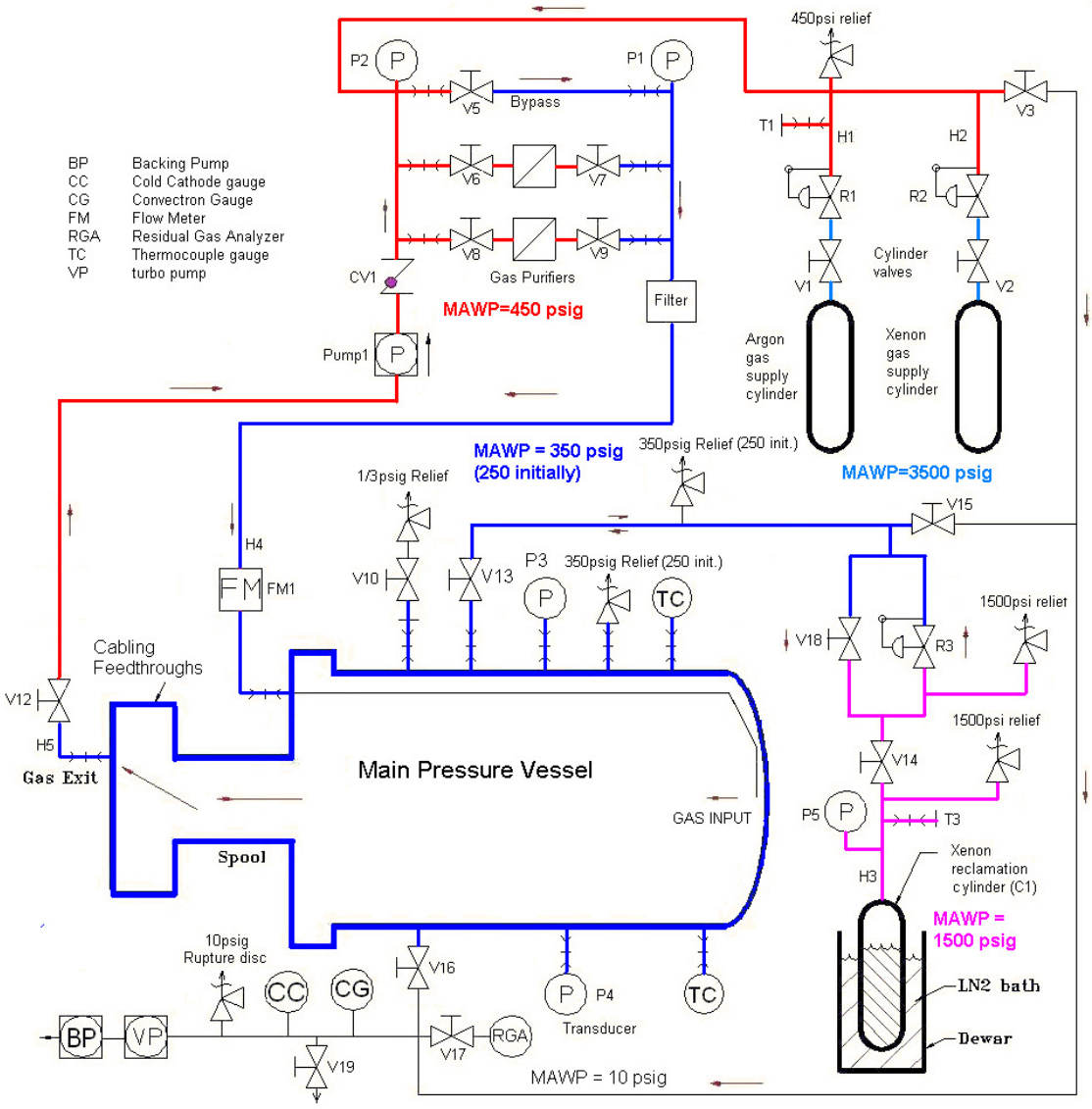

Fig. 5 Gas System Schematic

Operation of the system is treated in detail in section 8, Gas System below, and in the AHD (to be prepared). The basic sequence is essentially:

1. All valves, except the gas cylinder and vacuum purge valves, are opened (including the reclamation cylinder) and the system is pumped down to a high vacuum. Argon may be used for an initial flush, or to provide for a purge when the system is opened.

2. The vacuum valve is then shut and the system (including reclamation cylinder) is filled with Xenon to 300 psig (225 initially) at room temperature.

3. The dewar is filled with LN2; this freezes out the Xenon into the reclamation cylinder, which is then valved off.

4. The main system is refilled with Xenon to to 50 psig, and step 3 is repeated. This step charges the reclamation cylinder with a small amount of extra Xenon to provide for quicker refilling of the main system.

5. To fill the main system at the desired pressure, the reclamation cylinder is opened and regulated flow is let back into the vessel until the desired pressure is reached. Heaters on the reclamation cylinder may be needed to warm

the gas, as it will cool upon expansion; a maximum temp. of 50C is used. The gas will cool upon expanding through the regulator, and the pressure will be lower than 300 psig (225 psig initially) until the gas warms up to room temperature. Line heaters on the refill line may be needed to reduce the amount of time needed to come back to room temperature.

6. The pump is then operated to circulate the Xenon through the main pressure vessel and through the gas purifiers. The gas flow rate is varied as needed, using the pump controller, and only one gas purifier is used at a time.
7. To open the main pressure vessel for service (to TPC), step 3 is repeated.

8. After closing the main pressure vessel after TPC service and pumping it down to high vacuum, step 5 is repeated.

Pressure Safety Assurance There are five pressure zones in the system:

1. Main Vessel with attached components, 350 psig MAWP, protected by 350 psig relief valve on main vessel (a 250 psig relief valve will be installed initially until high pressure SHV-20 connectors are procured and installed).
2. Gas supply and purifier loops 1000 psig MAWP, protected by 450 psig relief valve.
3. Reclamation cylinder, 3000 psig MAWP, protected by 1500 psig relief valve.
4. The gas supply cylinders themselves have their burst disks behind their valves, per standard gas cylinder practice.
5. The vacuum system has a 10 psig burst disk on the vacuum side.

Hazards Analysis

There are no toxic, flammable, biological, or radioactive gasses or materials inside the vessel with the possible exception of some small low intensity sealed gamma ray sources. The inside detector is composed of common metals, Teflon, Mylar, Kapton and PEEK polymers, glass, signal cabling and some semiconductor ICs. There will be high voltage components inside, operating as high as +/-20 kV, but at low stored energy, and there will be no organic liquids, gases, or aerosols, and no oxygen present when operating, so there is no explosion hazard. There are 19 photomultiplier tubes (PMTs) 1 inch diameter by 2 inches long which are known to withstand use at 20 bar; they have the possibility of imploding under excessive pressure, but this is not expected to create any hazard from excessive transient pressure, or other hazard since they are surrounded by a dense gas, not a liquid, as is the case in some neutrino detectors. These PMTs will be hydrostatically pressure tested before use at 110-125% MOP = 375 psig (275 psig initially). There are no toxic or radioactive materials inside the PMT's. These PMTs are the limiting factor for the experiment, and set the MOP to 300 psig. There are, initially three SHV-20 high voltage feedthrus that are rated for use at 250 psi; this is the lowest MAWP of the entire system and thus a 250 psig relief valve will be initially installed on the pressure vessel until a high pressure (800 psig MAWP) version of this feedthrough is procured; at which time the MAWP will be changed to 350 psig.

There will be people present near the vessel when it is under full pressure. Under PUB3000, sec 7.6.1, it is classified as a High Hazard Pressure System, since there are gas pressures above 150 psig. An AHD is not required for the Xenon or Argon gases, nor any of the other materials inside, but there may be pressure and process hazards, so an AHD will be formulated.

Main Vessel Description

The vessel is constructed from Schedule 80 316L S.S. pipe and the flanges and heads are 304 S.S. (if not 304L). There are no brittle materials used. Welds were made by ASME certified welders according to the LLNL Note. Welds were designed with an efficiency factor of 0.7 to eliminate the need to radiograph welds.

As mentioned above, the main vessel has a Maximum Operating Pressure (MOP) of 850 psig when used with a specially made blank flat head which seals against the vessel flange with a C-type face gasket. Maximum allowable Pressure (MAWP) is 976 psig with this head. This vessel and head combination has been pressure tested to 1.5xMAWP=1467 psig. However there is no plan to operate the vessel at LBNL using this head.

It has an MOP of 350 psig when used with a different specially made flat head (labeled AAA-99-104240-00) which has a number of openings for instrumentation, each of which seals with a CF-type (conflat) flange. This flat head is not a standard CF type flange but has increased thickness and uses double the number of clamping bolts. It seals using a standard CF gasket and knife edge design, however. Maximum allowable Pressure (MAWP) is 406

psig. It has been pressure tested to 1.5xMAWP = 609 psig with this head (openings blanked off).

The vessel can only, and will only be used at LBNL with the 350 psig MOP head. There are a number of valves, pipes and electrical feedthru's that will attach to the head and vessel; all will be either rated by the manufacturer for 350 psig operation (MAWP at min.), and, if not, will be analyzed for pressure safety and pressure tested, either in conjunction with this vessel or separately. The strength of this vessel and head have no dependency on any attached components, nor do any attached components rely on this vessel or head for strength.

As stated above, there are no toxic, flammable, biological, or radioactive gasses or materials used inside the vessel with the exception of some small low intensity sealed gamma sources. Argon gas will be used as a purge gas, most likely at low pressure but perhaps up to the MOP e.g. for leak checking. There is a cold probe welded to the main tank vessel which was used to condense Xenon inside the vessel, using a surrounding dewar of LN2, however, there are no plans at LBNL to use this feature, and it will be labeled to prohibit use.

As stated above, there are also some new components which will be attached to the vessel and flat head, some of which are pressure rated by the manufacturer, some which are not rated by the manufacturer but which are suitable for safely holding pressure, and some which will be designed and built by LBNL. These latter two categories are analyzed in this note for sufficient strength and will be proof tested separately.

LLNL Safety Note MESN99-020-OA (1999) shows calculations performed in accordance with ASME Pressure Vessel Code Section VIII-1-1997. The analysis appears to be fairly complete and correct with respect to ASME Pressure Vessel Code Section VIII-1-2007, which this author has access to. There is an analysis of the 350 psi MOP head which uses a non-ASME method involving stress concentration factors, however there is also an analysis based on ASME methods. This document is reproduced in the Appendix. Also in the Appendix are the two pressure test reports from LLNL, plus two notes on pressure capacity of CF flanges, one from LLNL and one from ANL.

What follows are basic calculations for this experimental system and additional calculations for the added components:

3. Basic System Calculations

Stored Energy, U, @ 350 psig MAWP

from PUB3000 , Chapter 7, Appendix E:

$$U = \frac{P_h V_h}{\gamma - 1}\left[1 - \left(\frac{P_l}{P_h}\right)^{\frac{\gamma-1}{\gamma}}\right]$$

where:

$P_h := P_{MAWP} + 14.7psi$ $\quad P_h = 364.7\,psi$ $\quad P_l := 14.7psi$ $\quad \gamma := 1.666$ (for monatomic gases)

Volume includes vessel, cabling octagon, connecting spool, valve and gas system tubing:

$d_{ves} := 7.63in$	$l_{ves} := 13.5in$	main vessel inner dimensions
$d_{LNxt} := 2in$	$l_{LNxt} := 8in$	LN2 extension (cold probe)
$d_{oct} := 8in$	$l_{oct} := 3.0in$	Kimball octagon for cabling
$d_{spool} := 2in$	$l_{spool} := 10in$	connection spool, flat head to octagon
$d_{tubing} := 0.5in$	$l_{tubing} := 20ft$	gas system tubing and purifiers (est.)
$d_{valve} := 2in$	$l_{valve} := 4in$	high pressure volume of closed vacuum valve and tank stub
$d_{rc} := 3.43in$	$l_{rc} := 36in$	reclamation cylinder

$$V_h := \frac{\pi}{4}\cdot\left(d_{ves}^2\cdot l_{ves} + d_{LNxt}^2\cdot l_{LNxt} + d_{spool}^2\cdot l_{spool} + d_{oct}^2\cdot l_{oct} + d_{tubing}^2\cdot l_{tubing} + d_{valve}^2\cdot l_{valve} + d_{rc}^2 l_{rc}\right)$$

$V_h = 1.2\times 10^3\,in^3$ $\quad V_h = 19.9\,L$ $\qquad V_{ves} := \frac{\pi}{4} d_{ves}^2\cdot l_{ves}$ $\quad V_{ves} = 10.115\,L$

Stored Energy @ 350 psig MAWP

$$U_v := \frac{P_h \cdot V_h}{\gamma - 1}\left[1 - \left(\frac{P_l}{P_h}\right)^{\frac{\gamma-1}{\gamma}}\right] \qquad U_v = 54\,kJ$$

Mass of Xenon in System at operating pressure

$P_{MOP} = 300\,psi \quad R := 8.314 J \cdot mol^{-1} \cdot K^{-1} \quad T_{amb} := 300K \quad M_{a_Xe} := 131.3 gm \cdot mol^{-1}$

Critical Pressure, temperature of Xenon:

$P_{c_Xe} := 58.40bar \quad T_{c_Xe} := 15.6K + 273K$

reduced pressure:

$P_r := \frac{315psi}{P_{c_Xe}} \quad P_r = 0.361 \qquad T_r := \frac{T_{amb}}{T_{c_Xe}} \quad T_r = 1.04$

Compressibility Factor:

$Z_{Xe_20bar} := 0.88$ from chart for pure gasses shown below

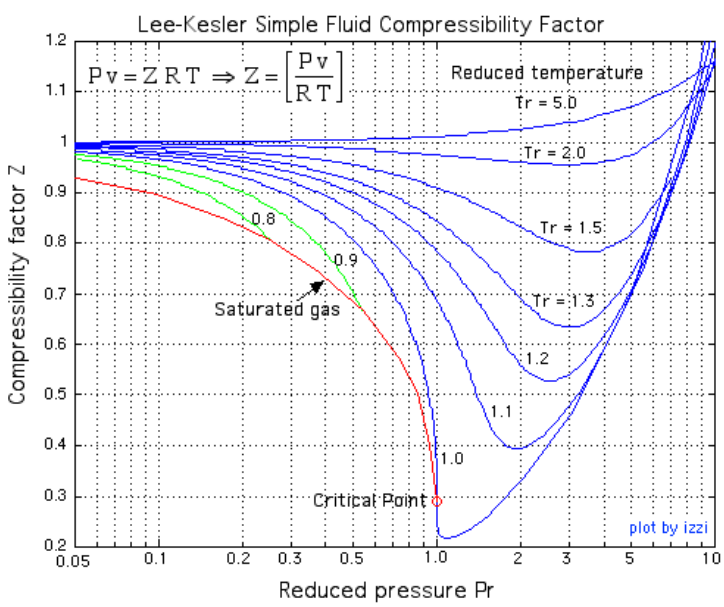

ref: A Generalized Thermodynamic Correlation based on Three-Parameter Corresponding States, B.I.Lee & M.G.Kesler, AIChE Journal, Volume 21, Issue 3, 1975, pp. 510-527' (secondary ref. from:http://www.ent.ohiou.edu/~-thermo/

Fig. 6 Compressibility Factor, pure gasses

Number of moles: molar density

$$n_{Xe} := \frac{P_{MOP} \cdot V_h}{Z_{Xe_20bar} \cdot R \cdot T_{amb}} \qquad n_{Xe} = 18.793\,mol \qquad \rho_{mol} := \frac{n_{Xe}}{V_h} \qquad \rho_{mol} = 0.942\,\frac{mol}{L}$$

Weight:

$W_{Xe} := M_{a_Xe} \cdot n_{Xe} \qquad W_{Xe} = 2.47\,kg$

Volume of LXe in reclamation cylinder (at freeze-out)

density: $\rho_{LXe} := 3.05\,\frac{gm}{mL}$ @ boiling, 1 bar, -101.8C

$$V_{LXe} := \frac{W_{Xe}}{\rho_{LXe}} \qquad V_{LXe} = 0.809\,L$$

Xenon reclamation cylinder volume

$V_{rc} := \frac{\pi}{4} \cdot d_{rc}^{2} \cdot l_{rc}$ $\quad V_{rc} = 5.451\,L$

Pressure in Reclamation Cylinder

we need to guess initial value and iterate to find Z. From Lee-Kesler chart above it looks like it could be as low as 0.4, but heated to 50C it could be:

$\rho_{mol_rc} := \frac{n_{Xe}}{V_{rc}}$ $\quad \rho_{mol_rc} = 3.448 \frac{mol}{L}$

$P_{rc_guess} := 3 \cdot P_{MOP}$ $\quad P_{rc_guess} = 60.2\,bar$

$P_{r_rc} := \frac{P_{rc_guess}}{P_{c_Xe}}$ $\quad P_{r_rc} = 1.032$

$T_{hot} := (273 + 50)K$ $\quad T_{r_hot} := \frac{T_{hot}}{T_{c_Xe}}$ $\quad T_{r_hot} = 1.12$

from chart above:

$Z_{Xe_rb_press} := .7$

$P_{rc} := \frac{n_{Xe} \cdot Z_{Xe_rb_press} \cdot R \cdot T_{amb}}{V_{rc}}$ $\quad P_{rc} = 58.4\,bar$ $\quad P_{rc} = 873\,psi$ close enough to guess

Alternately, we can use a pressure density curve:

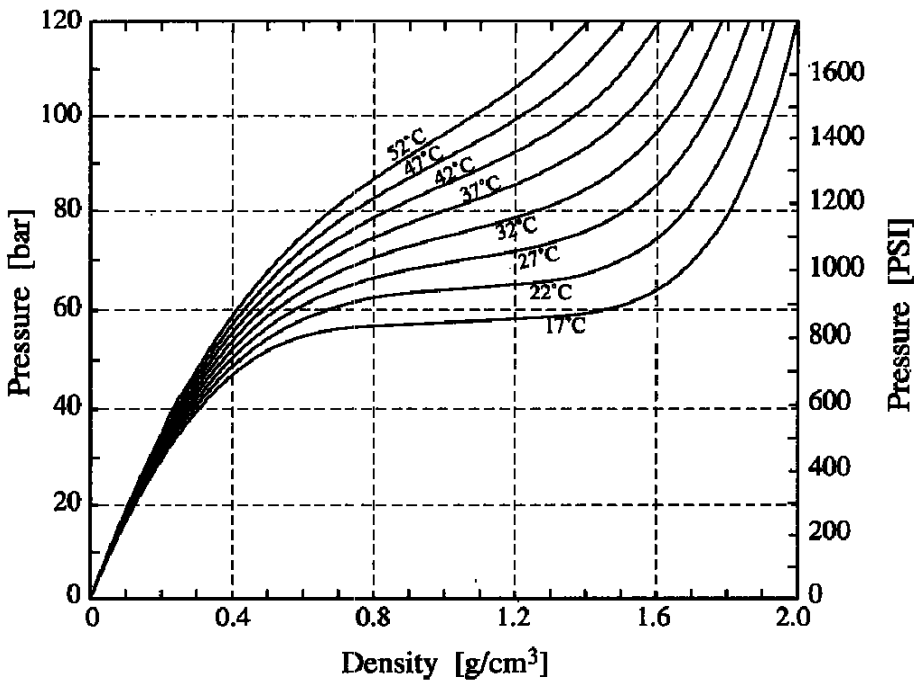

ref :Thermophysical Properties of Neon, Argon, Krypton, and Xenon V.A. Rabinovitch, A.A.Vasserman, V.I Nedostup, L.I. Veksler, Hemisphere Publishing Co (1985) *via:* A Portable Gamma Ray Spectrometer using Compressed Xenon G.J. Mahler, et. al. IEEE Trans. Nuc. Sci. 45(3) p. 1029(1998)

Fig. 7 Pressure-Density Curves for Xenon

for $\rho_{mass_rc} := \rho_{mol_rc} \cdot M_{a_Xe}$ $\quad \rho_{mass_rc} = 0.453 \frac{gm}{cm^3}$

we find a maximum pressure of

$P_{max_rc} := 63bar$ $\quad P_{max_rc} = 941\ psi$ at 50C, which is the maximum temperature we expect to see. The gas purifiers have a maximum temperature of 40C.

Note: The reclamation cylinder will not be heated when condensing out, or when full. It will only be heated as needed to assist in refilling; this will only happen at a low pressure, after the vessel has been mostly refilled. As such it's typical maximum pressure will be determined by the room ambient temperature. Assuming this is 30C:

$P_{typ_max_rc} := 57bar$ $\quad P_{typ_max_rc} = 852\ psi$

Stored Energy in Reclamation cylinder

$$U_{rc} := \frac{P_{max_rc} \cdot V_{rc}}{\gamma - 1}\left[1 - \left(\frac{P_1}{P_{max_rc}}\right)^{\frac{\gamma-1}{\gamma}}\right] \qquad U_{rc} = 43\,kJ \qquad @50C$$

4. Vacuum Valve:

Valve is a Carten HF2000 process valve which is designed not only to hold high vacuum, but also to hold high pressure:

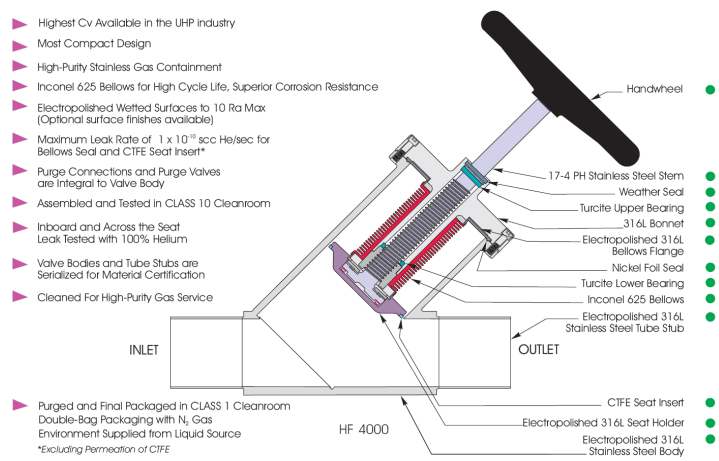

Fig. 8 Carten HF2000 process valve

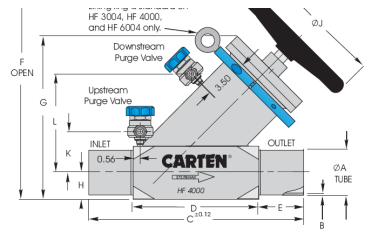

Standard purge valve connection sizes are:
HF 500, HF 751, HF 1000, and HF 1501 = 1/4" purge connectors
HF 1502 and larger valves = 1/2" purge valves

CAT. NO.	A*	B*	C	D	E	F	G	H	J
HF 500	0.50	0.049	9.50 (241.1mm)	3.46 (87.9mm)	3.02 (76.7mm)	4.75 (120.7mm)	3.26 (82.8mm)	0.50 (12.7mm)	2.50 (63.5mm)
HF 751	0.75	0.065	12.86 (326.6mm)	4.8 (121.9mm)	4.03 (102.4mm)	7.97 (202.4mm)	5.86 (148.8mm)	0.75 (19.1mm)	3.94 (100.1mm)
HF 1000	1.00	0.065	10.84 (275.3mm)	4.8 (121.9mm)	2.98 (75.7mm)	7.97 (202.4mm)	5.86 (148.8mm)	0.75 (19.1mm)	3.94 (100.1mm)
HF 1501	1.50	0.065	14.76 (374.9mm)	4.8 (121.9mm)	4.98 (126.5mm)	7.97 (202.4mm)	5.86 (148.8mm)	0.75 (19.1mm)	3.94 (100.1mm)
HF 1502	1.50	0.065	17.16 (435.9mm)	6.98 (177.3mm)	5.09 (129.3mm)	13.15 (340.0mm)	8.86 (225.0mm)	1.31 (33.3mm)	7.87 (199.9mm)
HF 2000	2.00	0.065	15.24 (387.1mm)	6.98 (177.3mm)	4.13 (104.9mm)	13.15 (340.0mm)	8.86 (225.0mm)	1.31 (33.3mm)	7.87 (199.9mm)

Fig. 9 Carten HF2000 process valve dimensions

Note: manufacturer has agreed to weld valve to a 4 5/8" CF flange and pressure certify to 350 psig MOP. Nevertheless, here are some calculations. We see that the pressure capability of this valve, in the closed position will be determined by the wall thickness B. From ASME Section VIII UG-27 Thickness of Shells under Internal Pressure:

(c) Cylindrical Shells. The minimum thickness or maximum allowable working pressure of cylindrical shells shall be the greater thickness or lesser pressure as given by (1) or (2) below.

(1) Circumferential Stress (Longitudinal Joints). When the thickness does not exceed one-half of the inside radius, or P does not exceed $0.385SE$, the following formulas shall apply:

$$t = \frac{PR}{SE - 0.6P} \quad \text{or} \quad P = \frac{SEt}{R + 0.6t} \qquad (1)$$

(2) Longitudinal Stress (Circumferential Joints).[16] When the thickness does not exceed one-half of the inside radius, or P does not exceed $1.25SE$, the following formulas shall apply:

$$t = \frac{PR}{2SE + 0.4P} \quad \text{or} \quad P = \frac{2SEt}{R - 0.4t} \qquad (2)$$

MAWP Weld efficiency

$P_{MAWP} = 350\,\text{psi}$ $E_w := 0.7$ (est.)

Maximum Allowable Stress, 304 stainless steel:

Pipe and Tube:

From ASME Pressure Vessel Code (2007) Section II, Materials

TABLE 1A (CONT'D)
SECTION I; SECTION III, CLASSES 2 AND 3;* SECTION VIII, DIVISION 1; AND SECTION XII
MAXIMUM ALLOWABLE STRESS VALUES *S* FOR FERROUS MATERIALS
(*See Maximum Temperature Limits for Restrictions on Class)

Line No.	Nominal Composition	Product Form	Spec No.	Type/Grade	Alloy Designation/ UNS No.	Class/ Condition/ Temper	Size/Thickness, in.	P-No.	Group No.
15	18Cr–8Ni	Smls. & wld. pipe	SA-312	TP304	S30400	...	...	8	1
16	18Cr–8Ni	Smls. & wld. pipe	SA-312	TP304	S30400	...	...	8	1
17	18Cr–8Ni	Wld. pipe	SA-312	TP304	S30400	...	...	8	1
18	18Cr–8Ni	Wld. pipe	SA-312	TP304	S30400	...	...	8	1

pg. 90

TABLE 1A (CONT'D)
SECTION I; SECTION III, CLASSES 2 AND 3;* SECTION VIII, DIVISION 1; AND SECTION XII
MAXIMUM ALLOWABLE STRESS VALUES *S* FOR FERROUS MATERIALS
(*See Maximum Temperature Limits for Restrictions on Class)

Line No.	Maximum Allowable Stress, ksi (Multiply by 1000 to Obtain psi), for Metal Temperature, °F, Not Exceeding													
	–20 to 100	150	200	250	300	400	500	600	650	700	750	800	850	900
15	20.0	...	20.0	...	18.9	18.3	17.5	16.6	16.2	15.8	15.5	15.2	14.9	14.6
16	20.0	...	16.7	...	15.0	13.8	12.9	12.3	12.0	11.7	11.5	11.2	11.0	10.8
17	17.0	...	17.0	...	16.1	15.5	14.8	14.1	13.8	13.5	13.2	12.9	12.6	12.4
18	17.0	...	14.2	...	12.7	11.7	11.0	10.4	10.2	10.0	9.8	9.6	9.4	9.2

pg. 92

note: lower 17 ksi values include joint efficiency E= 0.85 (N.A. here)

$S_{TP304} := 20\text{ksi}$

Flange is fabricated (typically) from 304 plate. Strength of 304 plate, also from Section II, Materials pgs. 90,92:

Line No.	Nominal Composition	Product Form	Spec No.	Type/Grade	Designation/ UNS No.	Condition/ Temper	Size/Thickness, in.	P-No.	Group No.
1	18Cr–8Ni	Plate	SA-240	302	S30200	...	...	8	1
2	18Cr–8Ni	Plate	SA-240	302	S30200	...	...	8	1
3	18Cr–8Ni	Plate	SA-240	304	S30400	...	...	8	1
4	18Cr–8Ni	Plate	SA-240	304	S30400	...	...	8	1

Line No.	Maximum Allowable Stress, ksi (Multiply by 1000 to Obtain psi), for Metal Temperature, °F, Not Exceeding													
	–20 to 100	150	200	250	300	400	500	600	650	700	750	800	850	900
1	20.0	...	20.0	...	18.9	18.3	17.5	16.6	16.2	15.8	15.5	...	...	...
2	20.0	...	16.7	...	15.0	13.8	12.9	12.3	12.0	11.7	11.5	...	...	...
3	20.0	...	16.7	...	15.0	13.8	12.9	12.3	12.0	11.7	11.5	11.2	11.0	10.8
4	20.0	...	20.0	...	18.9	18.3	17.5	16.6	16.2	15.8	15.5	15.2	14.9	14.6

$S_{304} := 20000\text{psi}$

wall thickness inner radius

$t_{neck} := .065\text{in}$ $R_{i_neck} := 1.0\text{in}$

$$t_{neck_min_circ} := \frac{P_{MAWP} \cdot R_{i_neck}}{S_{304} \cdot E_w - 0.6 \cdot P_{MAWP}}$$

$t_{neck_min_circ} = 0.025\,\text{in}$ OK

$$t_{neck_min_long} := \frac{P_{MAWP} \cdot R_{i_neck}}{2S_{304} \cdot E_w + 0.4P_{MAWP}} \qquad t_{neck_min_long} = 0.012\,in$$ OK

5. Spool

A connecting spool will be attached to the central 2.75" CF integral flange of the 350 psi MOP head. This spool will carry signal and power cabling to a Kimball Physics octagon vacuum chamber (AKA octagon) having (8) 2.75" CF ports. The spool has a 2.75" CF flange on one end and a 6" CF flange on the other end. To prevent additional loading of the tube from impact or handling forces applied to the octagon or attached cabling, the octagon will be secured by an angle bracket to the table top, which is a 3/4" thick aluminum plate. See figs 3, 4. We include moment from static weight of octagon and cabling per subsection UG-22 Loadings:

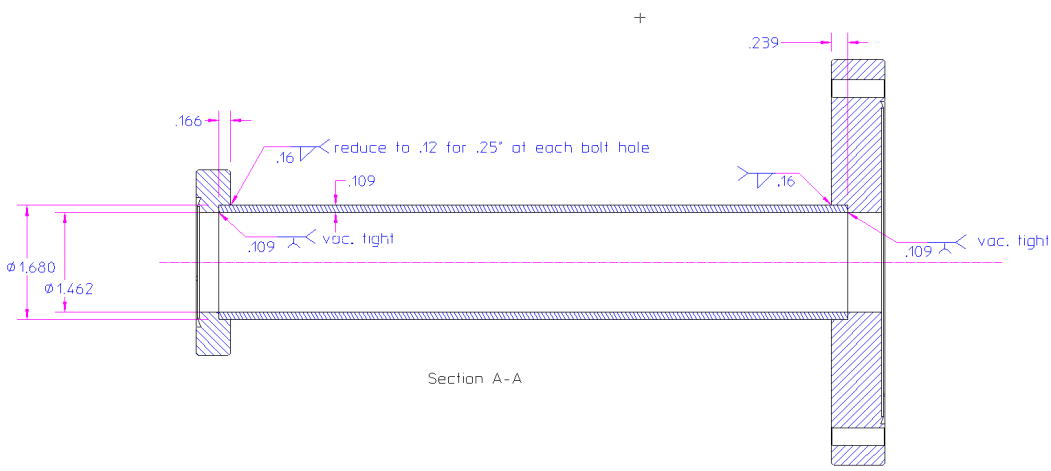

Fig. 10, Spool cross section

Spool Tube

Spool tube is a 1.25" schedule 10S pipe TP304 stainless steel, per ASME SA-312 specification (ASTM A 312)

spool tube diameter, length,thickness, inner radius:

$d_{o_sp_tube} := 1.66in \qquad l_{tube} := 9.5in \qquad t_{sp_tube} := .109in$

$d_{i_sp_tube} := d_{o_sp_tube} - 2t_{sp_tube} \qquad R_{i_sp_tube} := 0.5d_{i_sp_tube} \qquad R_{i_sp_tube} = 0.721\,in$

First we calculate minimum thickness required for tube to support weight of octagon and cables. This weight load occurs before the angle bracket restraint can be tightened and is "frozen in by the bracket" before pressure is applied. The load produces a bending moment on the tube which is highest where it is welded to the 2.75 in CF flange. This results in a longitudinal stress. We will then add this minimum thickness to that calculated for longitudinal stress due to pressure.

Weights:

octagon cabling and feedthrus CF flanges source insertion tube and flange

$W_{oct} := 13lbf \qquad W_{cables} := 5lbf \qquad W_{6in_CF} := 5.5lbf \qquad W_{so_tube} := 2lbf \qquad l_{oct} = 0.076\,m$

$W_{cp_tot} := W_{oct} + W_{cables} + 2 \cdot W_{6in_CF} + W_{so_tube}$

$M_{sp_tube} := \left(l_{tube} + 0.5l_{oct}\right) \cdot W_{cp_tot} \qquad M_{sp_tube} = 341\,lbf \cdot in$

$I_{sp_tube} := \frac{\pi}{64}\left(d_{o_sp_tube}^{\ 4} - d_{i_sp_tube}^{\ 4}\right) \qquad I_{sp_tube} = 0.16\,in^4$

$$\sigma_{sp_tube_mom} := \frac{M_{sp_tube} \cdot 0.5 d_{o_sp_tube}}{I_{sp_tube}} \qquad \sigma_{sp_tube_mom} = 1763\,psi$$

Since ASME Pressure Vessel code calculates required thickness, we can perform a similar calculation for the minimum thickness required to withstand the applied bending moment and add this thickness to that require for pressure containment. Using an alternative approximate formula for moment of Inertia, I (using average diameter and thickness):

$$d_{avg_sp_tube} := 0.5\left(d_{i_sp_tube} + d_{o_sp_tube}\right)$$

$$I_{sp_tube2} := \frac{\pi}{16} d_{avg_sp_tube}^{3} \cdot t$$

Note: Equations (assignments) which have a small black square in their upper right corner are disabled (not active).

$$\sigma := \frac{Mc}{I} \qquad \sigma := \frac{M \cdot c}{\frac{\pi}{16} \cdot d^{3} t} \qquad \sigma := S \cdot E$$

Solving for t (we need weld efficiency E): $E_{w_fw} := 0.55$ double fillet weld from Table UW-12 (see weld calc below)

$$t_{sp_tube_M} := \frac{M_{sp_tube} \cdot 0.5 d_{avg_sp_tube}}{\frac{\pi}{16} d_{avg_sp_tube}^{3} \cdot S_{TP304} \cdot E_{w_fw}} \qquad t_{sp_tube_M} = 0.033\,in$$

Minimum tube thickness required for pressure load, as above, from UG-27:

$$t_{sp_tube_min_circ} := \frac{P_{MAWP} \cdot R_{i_sp_tube}}{S_{TP304} \cdot E_{w_fw} - 0.6 \cdot P_{MAWP}} \qquad t_{sp_tube_min_circ} = 0.023\,in$$ OK

$$t_{sp_tube_min_long} := \frac{P_{MAWP} \cdot R_{i_sp_tube}}{2 S_{TP304} \cdot E_{w_fw} + 0.4 P_{MAWP}} \qquad t_{sp_tube_min_long} = 0.011\,in$$ OK

Adding the two minimum thicknesses required for longitudinal stress:

$$t_{sp_tube_long_total} := t_{sp_tube_min_long} + t_{sp_tube_M} \qquad t_{sp_tube_long_total} = 0.044\,in$$ OK

This total required thickness is greater than that required for circumferential pressure, but still less than actual thickness.

Weld design:

From fig. UW-12 welds on both ends of tube are type 4 double full fillet welds, Category C weld (subsection UW-9 Design of Welded Joints , fig. UW-3) of type (n) below and must conform to rules in the figure

FIG. UW-13.2 ATTACHMENT OF PRESSURE PARTS TO FLAT PLATES TO FORM A CORNER JOINT (CONT'D)

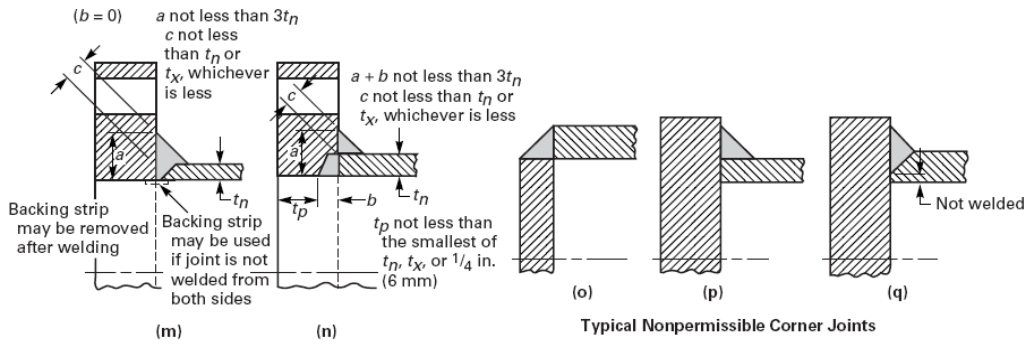

Typical Bolted Flange Connections
c, t_n, and t_x are as defined in 2-3

weld dimensions:

outer inner

$h_{o_sp} := .16in$ $h_{i_sp} := .082in$

dimensions for fig (n) above:

$c_{sp} := \frac{\sqrt{2}}{2} h_{o_sp}$ $c_{sp} = 0.113\,in$ $t_{n_sp} := t_{sp_tube}$

$a_{sp} := t_{sp_tube} + h_{o_sp}$ $a_{sp} = 0.269\,in$ $b_{sp} := h_{i_sp}$

weld criteria for fig (n) above:

$c_{sp} = 0.113\,in$ > $t_{n_sp} = 0.109\,in$ OK

$a_{sp} + b_{sp} = 0.351\,in$ > $3t_{n_sp} = 0.327\,in$ OK

CF flange calcs

First we consider blank flanges, then consider those with central openings no larger that 0.5D; these are both considered flat unstayed heads. This is the case for the 6 in CF flange of the spool connecting to the octagon, and also for the 6 inch CF flange on the back of the octagon, which will have a central 2.75CF (1.5in dia) opening. From subsection UG-34, Unstayed Flat Heads and Covers :

(2) The minimum required thickness of flat unstayed circular heads, covers and blind flanges shall be calculated by the following formula:

$$t = d\sqrt{CP/SE} \qquad (1)$$

except when the head, cover, or blind flange is attached by bolts causing an edge moment [sketches (j) and (k)] in which case the thickness shall be calculated by

$$t = d\sqrt{CP/SE + 1.9Wh_G/SEd^3} \qquad (2)$$

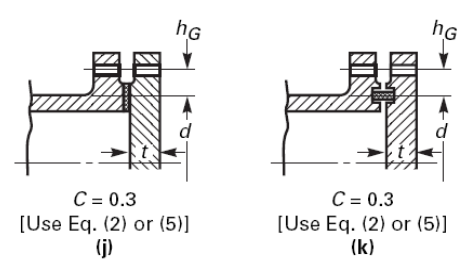

Eq. 2 is applicable, and we can use mathCAD's ability to analyze a large number of CF flanges simultaneously. The following calculations are parallel calculations (not matrix or vector calcs). Read straight across from

desired flange size, OD_{CF} , in order to find associated quantities:

Flange size

$$OD_{CF} := \begin{pmatrix} 1.33 \\ 2.125 \\ 2.75 \\ 3.375 \\ 4.5 \\ 4.625 \\ 6 \\ 8 \\ 10 \\ 13.25 \end{pmatrix} in$$

Number of bolts

$$N_{CF} := \begin{pmatrix} 6 \\ 4 \\ 6 \\ 8 \\ 8 \\ 10 \\ 16 \\ 20 \\ 24 \\ 30 \end{pmatrix}$$

Knife edge diameter

$$d_{ke} := \begin{pmatrix} .72 \\ 1.09 \\ 1.65 \\ 2.20 \\ 3.04 \\ 3.35 \\ 4.54 \\ 6.54 \\ 8.54 \\ 11.35 \end{pmatrix} in$$

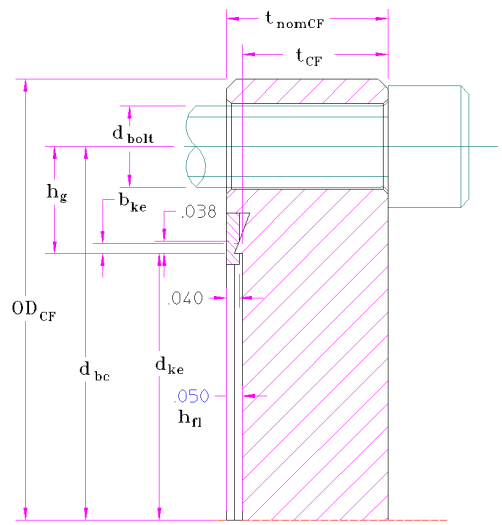

Fig. 11 CF (conflat) flange dimensions

Flange size

$$OD_{CF} = \begin{pmatrix} 1.33 \\ 2.125 \\ 2.75 \\ 3.375 \\ 4.5 \\ 4.625 \\ 6 \\ 8 \\ 10 \\ 13.25 \end{pmatrix} in$$

Bolt circle dia.

$$d_{bc} := \begin{pmatrix} 1.062 \\ 1.625 \\ 2.312 \\ 2.85 \\ 3.628 \\ 4.03 \\ 5.128 \\ 7.128 \\ 9.128 \\ 12.06 \end{pmatrix} in$$

Flange thickness

$$t_{nomCF} := \begin{pmatrix} .285 \\ .47 \\ .5 \\ .62 \\ .68 \\ .75 \\ .78 \\ .88 \\ .97 \\ 1.12 \end{pmatrix} in$$

Bolt dia.

$$d_{bolt} := \begin{pmatrix} .16 \\ .25 \\ .3125 \\ .3125 \\ .3125 \\ .3125 \\ .3125 \\ .3125 \\ .3125 \\ .375 \end{pmatrix} in$$

Height of bolt flange

$$h_{fl} := \begin{pmatrix} .05 \\ .05 \\ .05 \\ .05 \\ .05 \\ .05 \\ .05 \\ .05 \\ .05 \\ .05 \end{pmatrix} in$$

Bolt Load W:

We have several choices here, use the flange mfr.'s recommended bolt torque (T_{CF_MDC}), a torque found to pull flanges together (T_{CF_ANL}; see ANL note in Appendix) or use a value bolt torque (T_{rec}) back calculated to withstand the required pressure (times a suitable safety factor) without exceeding ASME allowable flange stress for loose flanges, which the 2.75 OD flange is. This is the controlling configuration, and is treated in the section below for Flanges with Large Central Openings. It turns out that higher torques are not necessarily better, the additional edge moment creates flange stresses higher than allowed. If the joint fully closes (flange faces fully touching under bolts), then the joint design is changed and edge moment is reduced or eliminated, however this is not a reliably achievable condition. The Appendix contains a note testing this method (no pressure tests however). We use this back calculated torque T_{rec} (recommended torque) below by assigning T_{rec} to T_{CF}: Note that under ASME code Section VIII, non mandatory Appendix S-1 certain allowances can be made to use higher than calculated bolt tensions if needed in order to achieve sealing under unusual circumstances. Use of annealed copper gaskets is recommended. Sustituting elastomeric O-rings (Vition, Buna-N, PTFE) is also possible; this eliminates edge moments from tightening. The procedure here will be to start by using annealed Copper gaskets; tightening bolts initially to T_{rec} then leak checking during pressure testing; additional torque is to be used only if necessary. Safety will achieved via the pressure test, and also by noting the previous experience and testing of others as documented in the LLNL Safety Note END 92-072 (in

Appendix), showing that CF flanges will leak before breaking from pressure loads.

Torques, bolt

$$OD_{CF} = \begin{pmatrix} 1.33 \\ 2.125 \\ 2.75 \\ 3.375 \\ 4.5 \\ 4.625 \\ 6 \\ 8 \\ 10 \\ 13.25 \end{pmatrix} in \quad T_{CF_ANL} := \begin{pmatrix} 40 \\ 163 \\ 163 \\ 197 \\ 217 \\ 190 \\ 217 \\ 246 \\ 260 \\ 330 \end{pmatrix} lbf \cdot in$$

from ref. 3, ANL CF pressure capacity document, torque required to pull CF flanges fully together

$$T_{CF_MDC} := \begin{pmatrix} 7 \\ 12 \\ 15 \\ 15 \\ 15 \\ 15 \\ 15 \\ 15 \\ 15 \\ 26 \end{pmatrix} lbf \cdot ft \quad T_{rec} := \begin{pmatrix} .65 \\ 5 \\ 4 \\ 6.5 \\ 12.5 \\ 9.5 \\ 9.5 \\ 10.5 \\ 11 \\ 15 \end{pmatrix} lbf \cdot ft$$

Torque Used:

$$T_{CF} := T_{rec}$$

Total Bolt Load:

$$W_{CF} := \overrightarrow{\frac{N_{CF} \cdot 5 T_{CF}}{d_{bolt}}} \qquad OD_{CF} = \begin{pmatrix} 1.33 \\ 2.125 \\ 2.75 \\ 3.375 \\ 4.5 \\ 4.625 \\ 6 \\ 8 \\ 10 \\ 13.25 \end{pmatrix} in \qquad W_{CF} = \begin{pmatrix} 1463 \\ 4800 \\ 4608 \\ 9984 \\ 19200 \\ 18240 \\ 29184 \\ 40320 \\ 50688 \\ 72000 \end{pmatrix} lbf$$

Flange Thickness, effective:

$$t_{CF} := \overrightarrow{\left(t_{nomCF} - h_{fl}\right)} \qquad OD_{CF} = \begin{pmatrix} 1.33 \\ 2.125 \\ 2.75 \\ 3.375 \\ 4.5 \\ 4.625 \\ 6 \\ 8 \\ 10 \\ 13.25 \end{pmatrix} in \qquad t_{CF} = \begin{pmatrix} 0.235 \\ 0.42 \\ 0.45 \\ 0.57 \\ 0.63 \\ 0.7 \\ 0.73 \\ 0.83 \\ 0.92 \\ 1.07 \end{pmatrix} in$$

radial distance from gasket load center to bolt circle:

$$h_g := 0.5\overrightarrow{\left(d_{bc} - d_{ke}\right)} \qquad OD_{CF} = \begin{pmatrix} 1.33 \\ 2.125 \\ 2.75 \\ 3.375 \\ 4.5 \\ 4.625 \\ 6 \\ 8 \\ 10 \\ 13.25 \end{pmatrix} \text{in} \qquad h_g = \begin{pmatrix} 0.171 \\ 0.267 \\ 0.331 \\ 0.325 \\ 0.294 \\ 0.34 \\ 0.294 \\ 0.294 \\ 0.294 \\ 0.355 \end{pmatrix} \text{in}$$

$$E := 1 \qquad C_j := 0.3$$

Solving for pressure in eq (2) above:

$$P_j := \frac{S_{304} \cdot E}{C_j} \overrightarrow{\left(\frac{t_{CF}^{\,2}}{d_{ke}^{\,2}} - \frac{1.9 \cdot W_{CF} \cdot h_g}{S_{304} \cdot E \cdot d_{ke}^{\,3}} \right)} \qquad P_j = \begin{pmatrix} 2858 \\ 3619 \\ 2808 \\ 2545 \\ 1591 \\ 1866 \\ 1143 \\ 805 \\ 622 \\ 482 \end{pmatrix} \text{psi}$$

All pressures are greater than:

$P_{MAWP} = 350\,\text{psi}$

so all CF blank flanges are suitable for use, when torqued to T_{rec}

CF gasket calculations

From Appendix 2 Section VIII-Div. 1 Rules for Bolted Flange Connections with Ring type Gaskets subsection 2-5, <u>Bolt Loads:</u>

The required bolt load for the operating conditions W_{m1} is determined in accordance with eq. (1).

$$\begin{aligned} W_{m1} &= H + H_p \\ &= 0.785G^2P + (2b \times 3.14GmP) \qquad (1) \end{aligned}$$

(2) Before a tight joint can be obtained, it is necessary to seat the gasket or joint-contact surface properly by applying a minimum initial load (under atmospheric temperature conditions without the presence of internal pressure), which is a function of the gasket material and the effective gasket area to be seated. The minimum initial bolt load required for this purpose W_{m2} shall be determined in accordance with eq. (2).

$$W_{m2} = 3.14bGy \qquad (2)$$

where G is the gasket diameter

for flat copper gaskets (from Table 2-5.1):

$m_{Cu_flat} := 4.75$ $\quad y_{Cu_flat} := 13000psi$

effective width b is taken to be 80% of the width of the interference (.0384 in) of the knife edge (to allow for less than full joint closure) and the gasket (.08" thk.):

$b_{ke} := 80\% \cdot .0384in$ .0384 in. measured from 2.75 in flange MDC CAD model; assume same for all flanges

$b_{ke} = 0.031\,in$

$G := d_{ke} + 2b_{ke}$ outer diameter of effective compressed gasket area

solving eq (1) above for maximum pressure, (in two stages, to allow concurrent calculation)

$$p_{m1} := \frac{1}{\overrightarrow{\left(0.785G^2 + 2\pi b_{ke} \cdot m_{Cu_flat} \cdot G\right)}}$$

$$P_{m1} := \overrightarrow{\left(p_{m1} \cdot W_{CF}\right)}$$

and eq(2):

$$W_{m2} := 3.14 b_{ke} \cdot G \cdot y_{Cu_flat}$$

$$OD_{CF} = \begin{pmatrix} 1.33 \\ 2.125 \\ 2.75 \\ 3.375 \\ 4.5 \\ 4.625 \\ 6 \\ 8 \\ 10 \\ 13.25 \end{pmatrix} in \quad P_{m1} = \begin{pmatrix} 1223 \\ 2290 \\ 1191 \\ 1640 \\ 1847 \\ 1487 \\ 1400 \\ 1001 \\ 768 \\ 639 \end{pmatrix} psi \quad W_{m2} = \begin{pmatrix} 980 \\ 1444 \\ 2146 \\ 2836 \\ 3889 \\ 4278 \\ 5770 \\ 8278 \\ 10786 \\ 14310 \end{pmatrix} lbf \quad \text{compare--> } W_{CF} = \begin{pmatrix} 1463 \\ 4800 \\ 4608 \\ 9984 \\ 19200 \\ 18240 \\ 29184 \\ 40320 \\ 50688 \\ 72000 \end{pmatrix} lbf$$

We see that the gasket preloading requirement W_{m2} is easily exceeded by the actual preload W_{CF}, and that the gaskets can theoretically hold far higher pressure than necessary (350 psi).

CF Blank Flange maximum opening diameter:

UG-39(b) Single and multiple openings in flat heads that have diameters equal to or less than one-half the head diameter may be reinforced as follows:

UG-39(b)(1) Flat heads that have a single opening with a diameter that does not exceed one-half the head diameter or shortest span, as defined in UG-34, shall have a total cross-sectional area of reinforcement for all planes through the center of the opening not less than that given by the formula

$$A = 0.5dt + tt_n(1 - f_{r1})$$

where d, t_n, and f_{r1} are defined in UG-37 and t in UG-34.

The 2.75 inch CF flange of the spool does not meet the above requirement,and is considered a loose flange, in a subsequent section. Nevertheless it is useful at this point to check to see if flanges that meet the requirement above are adequately reinforced for MAWP. Assume in formula above, that nozzle thickness is zero. First we determine minimum thickness required: t (here t_{min}). From subsection UG-34 :

(2) The minimum required thickness of flat unstayed circular heads, covers and blind flanges shall be calculated by the following formula:

$$t = d\sqrt{CP/SE} \qquad (1)$$

except when the head, cover, or blind flange is attached by bolts causing an edge moment [sketches (j) and (k)] in which case the thickness shall be calculated by

$$t = d\sqrt{CP/SE + 1.9Wh_G/SEd^3} \qquad (2)$$

from sketches (j), (k) $C := 0.3$

weld efficiency: $E := 1$ (assume stock flanges only

$$t_{min_CF} := \overrightarrow{\left(OD_{CF}\cdot\sqrt{\frac{C\cdot P_{MAWP}}{S_{304}\cdot E} + \frac{1.9W_{CF}\cdot h_g}{S_{304}\cdot E\cdot OD_{CF}^{\ 3}}}\right)}$$

minimum flange thickness

$$t_{min_CF} = \begin{pmatrix} 0.165 \\ 0.285 \\ 0.304 \\ 0.389 \\ 0.475 \\ 0.49 \\ 0.57 \\ 0.69 \\ 0.816 \\ 1.051 \end{pmatrix} in$$

thickness available for reinforcement

$$t_{CF} - t_{min_CF} = \begin{pmatrix} 0.07 \\ 0.135 \\ 0.146 \\ 0.181 \\ 0.155 \\ 0.21 \\ 0.16 \\ 0.14 \\ 0.104 \\ 0.019 \end{pmatrix} in$$

Area available for reinforcement

$$A_{rein_CF} := \overrightarrow{\left[0.5\cdot OD_{CF}\cdot\left(t_{CF} - t_{min_CF}\right)\right]}$$

$$A_{rein_CF} = \begin{pmatrix} 0.047 \\ 0.144 \\ 0.201 \\ 0.306 \\ 0.349 \\ 0.487 \\ 0.48 \\ 0.558 \\ 0.518 \\ 0.125 \end{pmatrix} in^2$$

Maximum central opening diameter:

$$d_{i_max_CF} := \overrightarrow{\frac{A_{rein_CF}}{t_{CF}}}$$

$$d_{i_max_CF} = \begin{pmatrix} 0.199 \\ 0.342 \\ 0.446 \\ 0.537 \\ 0.554 \\ 0.695 \\ 0.658 \\ 0.672 \\ 0.563 \\ 0.117 \end{pmatrix} in$$

Note that the above bolt torques, calculated to give maxim allowable flange stress, essentially "use up" the reserve thickness in the flange so that only small central openings are permitted. These torques can be modified if needed to give larger central openings.

CF flanges with large central openings (ID>0.5OD):

For the small 2.75 inch flange on the spool (or for any central opening larger than that computed above) we consider this as a loose flange, per mandatory Appendix 2 of Section VIII- Div. 1, Rules for Bolted Flange Conections with Ring-type Gaskets, subsection 2-4 Circular Flange Types, as the attached tube does not contribute any strength to the flange. From subsection 2-6 Flange Moments:

Flange Moment

$$M_0 := W \cdot \frac{(C - G)}{2} \qquad M_0 := \overrightarrow{(W_{CF} \cdot h_g)} \qquad M_0 = \begin{pmatrix} 250 \\ 1284 \\ 1525 \\ 3245 \\ 5645 \\ 6202 \\ 8580 \\ 11854 \\ 14902 \\ 25560 \end{pmatrix} lbf \cdot in$$

Flange Stresses:

From mandatory Appendix 2, subsection 2-7 Flange Stresses:

First, compute several factors:

$$A := OD_{CF} \qquad A = \begin{pmatrix} 1.33 \\ 2.125 \\ 2.75 \\ 3.375 \\ 4.5 \\ 4.625 \\ 6 \\ 8 \\ 10 \\ 13.25 \end{pmatrix} in$$

Flange maximum inner diameter (from MDC catalogue)

$$ID_{CF} := \begin{pmatrix} .625 \\ 1 \\ 1.75 \\ 2 \\ 2.5 \\ 3 \\ 4 \\ 6 \\ 8 \\ 10.75 \end{pmatrix} in \qquad B := ID_{CF} \qquad B = \begin{pmatrix} 0.625 \\ 1 \\ 1.75 \\ 2 \\ 2.5 \\ 3 \\ 4 \\ 6 \\ 8 \\ 10.75 \end{pmatrix} in$$

$$K := \overrightarrow{\frac{A}{B}} \qquad K = \begin{pmatrix} 2.128 \\ 2.125 \\ 1.571 \\ 1.688 \\ 1.8 \\ 1.542 \\ 1.5 \\ 1.333 \\ 1.25 \\ 1.233 \end{pmatrix} \qquad Y := \overrightarrow{\left[\frac{1}{K-1}\left[0.66845 + 5.717 \cdot \left(\frac{K^2 \cdot \log(K)}{K^2 - 1}\right)\right]\right]} \qquad Y = \begin{pmatrix} 2.726 \\ 2.731 \\ 4.47 \\ 3.885 \\ 3.474 \\ 4.659 \\ 4.961 \\ 6.903 \\ 8.83 \\ 9.406 \end{pmatrix}$$

Bolt Torque used:

Flange Stresses (eqs. 9):

Tangential:

$$S_T := \frac{\overrightarrow{Y \cdot M_0}}{t_{CF}^{\,2} B} \qquad S_T = \begin{pmatrix} 19751 \\ 19878 \\ 19240 \\ 19398 \\ 19764 \\ 19657 \\ 19969 \\ 19798 \\ 19433 \\ 19534 \end{pmatrix} \text{psi} \qquad S_{304} = 2 \times 10^4 \text{ psi} \qquad S_T < S_{304} \quad \text{OK} \qquad OD_{CF} = \begin{pmatrix} 1.33 \\ 2.125 \\ 2.75 \\ 3.375 \\ 4.5 \\ 4.625 \\ 6 \\ 8 \\ 10 \\ 13.25 \end{pmatrix} \text{in}$$

Radial and Axial stresses = 0

6. Kimball Physics Octagon

This is a 304 stainless steel machined octagonal vacuum chamber. It has eight 2.75 in CF ports, which will be used for feedthroughs and as above, we use subsection UG-27:

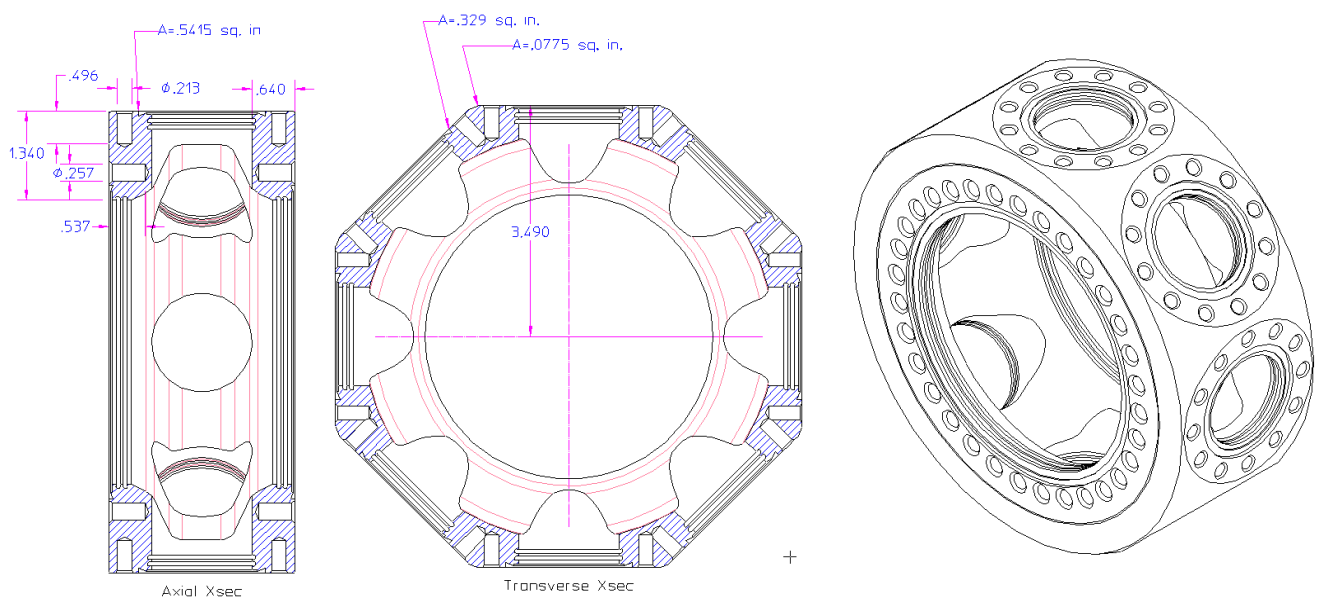

Fig. 12 Kimball Physics octagonal vacuum chamber ("octagon")

Areas, minimum of half cross sections:

$$A_{circ} := 2 \cdot 0.5415 \text{in}^2 \qquad A_{circ} = 1.083 \text{ in}^2 \qquad A_{long} := 4 \cdot (0.329 + 0.0775) \text{ in}^2 \qquad A_{long} = 1.626 \text{ in}^2$$

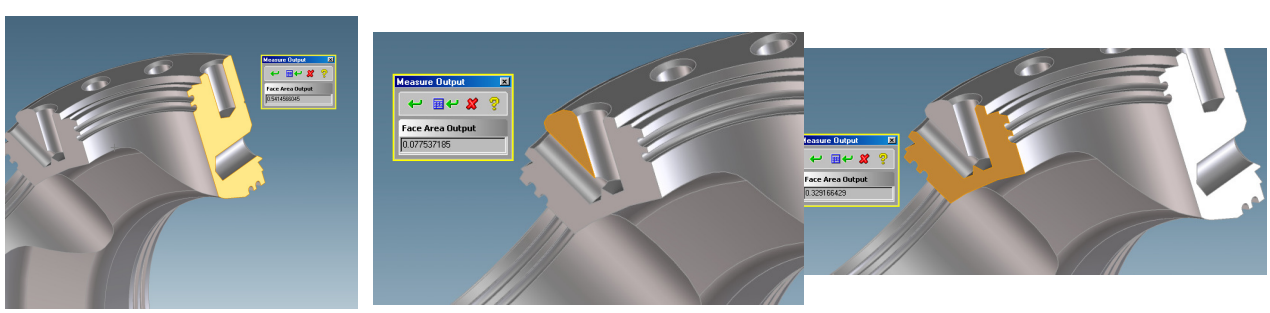

Fig. 13, section area measurements, octagon

Radii:

$R_{i_oct} := 3.5in$ note: this is largest radius (at the 2.75 in CF flanges)

Equivalent thicknesses (by dividing out radius)

$$t_{oct_circ} := \frac{A_{circ}}{R_{i_oct}} \qquad t_{oct_circ} = 0.309\,in$$

$$t_{oct_long} := \frac{A_{long}}{R_{i_oct}} \qquad t_{oct_long} = 0.465\,in$$

Weld Efficiency:

$E = 1$ machined, not welded

Minimum equivalent thicknesses:

$$t_{oct_min_circ} := \frac{P_{MAWP} \cdot R_{i_oct}}{S_{304} \cdot E - 0.6 \cdot P_{MAWP}} \qquad t_{oct_min_circ} = 0.062\,in \quad \text{compare --> } t_{oct_circ} = 0.309\,in$$

$$t_{oct_min_long} := \frac{P_{MAWP} \cdot R_{i_oct}}{2S_{304} \cdot E + 0.4P_{MAWP}} \qquad t_{oct_min_long} = 0.031\,in \quad \text{compare --> } t_{oct_long} = 0.465\,in$$

7. Source Tube

This is a closed end tube welded to a 2.75 " CF flange for the purpose of introducing a small radioactive source into the chamber without opening up the vessel. The vessel pressure acts on the end and outer diameter of the tube, thus tube buckling is a possible failure mode. We use subsection UG-28 Thickness of Shells and Tubes Under External Pressure:

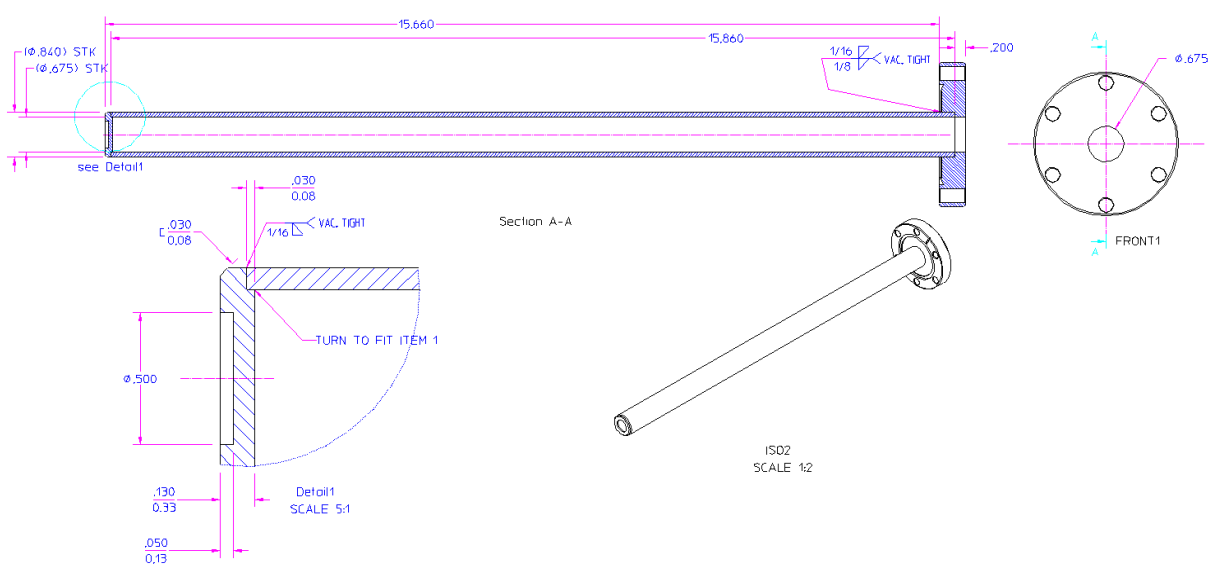

Fig 14, Source Insertion Tube

Tube is a 1/2 in. schedule 10S, ASME SA312 TP304 stainless pipe

$D_{o_st} := .84in \qquad L_{st} := 16in \qquad t_{st} := .083in$

External pressure, maximum: $P_{st} := -P_{MAWP}$

The maximum allowable working external pressure is determined by the following procedure:

Compute the following two dimensionless constants:

$$\frac{L_{st}}{D_{o_st}} = 19 \qquad \frac{D_{o_st}}{t_{st}} = 10$$

From the above two quantities, we find, from fig. G in subpart 3 of Section II, the factor:

$$A_{st} := .012$$

Using the factor A in the applicable material (304 S.S.) chart (HA-1) in Subpart 3 of Section II, Part D, we find the factor B:

$$B_{st} := 14000\text{psi}$$

A08 FIG. G GEOMETRIC CHART FOR COMPONENTS UNDER EXTERNAL OR COMPRESSIVE LOADINGS (FOR ALL MATERIALS) [NOTE (14)]

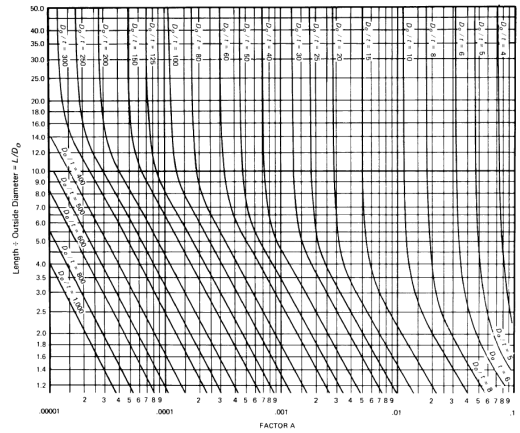

FIG. HA-1 CHART FOR DETERMINING SHELL THICKNESS OF COMPONENTS UNDER EXTERNAL PRESSURE DEVELOPED FOR AUSTENITIC STEEL 18Cr–8Ni, TYPE 304

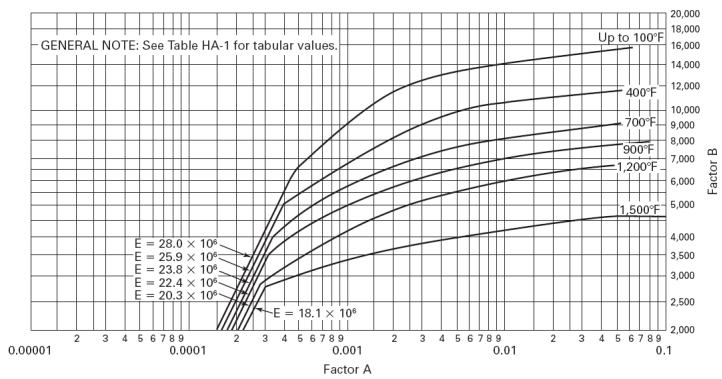

The maximum allowable working external pressure is then given by :

$$P_{max_st} := \frac{4B_{st}}{3\left(\frac{D_{o_st}}{t_{st}}\right)} \qquad P_{max_st} = 1844\,\text{psi} \quad \text{(external)}$$

$P_{max_st} > 1.5P_{MAWP}$ so the source tube is safe from buckling under test pressure load

There is a bending moment on the tube where welded to the flange from the weight of the source collimator

Tube weight:

$$W_{st} := \rho_{SS}\cdot\pi\cdot D_{o_st}\cdot t_{st}\cdot L_{st}\cdot g \qquad \rho_{SS} := 8\,\frac{\text{gm}}{\text{cm}^3} \qquad W_{st} = 1.013\,\text{lbf}$$

Collimator is either tungsten (19.3 gm/cc) or hevimet (19gm/cc). Maximum possible dimensions:

$$l_{col} := L_{st} \qquad d_{col} := D_{o_st} - 2t_{st} \qquad d_{col} = 0.674\,\text{in} \qquad \rho_W := 19.3\,\frac{\text{gm}}{\text{cm}^3}$$

Weight of collimator :

$$W_{col} := \frac{\pi}{4}d_{col}^{\,2}\cdot l_{col}\cdot\rho_W\cdot g \qquad W_{col} = 3.98\,\text{lbf}$$

Moment on tube

$$M_{st} := W_{col}\cdot\left(L_{st} - 0.5l_{col}\right) + W_{st}\cdot 0.5L \quad M_{st} = 39.9\,\text{lbf}\cdot\text{in}$$

Moment of Inertia, source tube

$$I_{st} := \frac{\pi}{64}\left(D_{o_st}^{\,4} - d_{col}^{\,4}\right) \qquad I_{st} = 0.014\,\text{in}^4$$

Stress, bending:

$$\sigma_{st} := \frac{M_{st} \cdot 0.5D_{o_st}}{I_{st}} \qquad \sigma_{st} = 1172\,psi$$ negligible

Axial Compressive Stress on tube:

The tube is relatively long and may be subject to Euler buckling. ASME code treats this as an alternate maximum allowable stress, rather than a maximum loading. From subsection UG-23 Maximum Allowable Stress Values, maximum allowable axial compressive stress, is smaller of :

S, from above (20 ksi) or:
B, as computed below

First, determine minimum required thickness (not sure why actual thickness is not used here):

$t_{st_min} := .023in$ found using external presssure formula above for 500 psi (test pressure)

Then, determine the quantity:

$$A_{stl} := \frac{0.125}{\left[\frac{\left(0.5D_{o_st}\right)}{t_{st_min}}\right]} \qquad A_{stl} = 0.007$$

From Subpart 3 of Section II, Part D, chart HA-1:

$B_{st_max} := 13500psi$

Actual compressive stress (at test pressure of 1.5x MAWP):

$$\sigma_{st_ax} := \frac{1.5P_{MAWP} \cdot D_{o_st}}{4t_{st}} \qquad \sigma_{st_ax} = 1328\,psi$$ OK

Welds are nonstructural, and do not carry pressure loads (other than vacuum); they are primarily for sealing.

Window stress (mtl:304SS):

From subsection UG-34, Unstayed Flat Heads and Covers :

$t_w := 1.5mm \quad R_w := .25in$

$E_w = 0.7$ (outside HAZ, but use any

(2) The minimum required thickness of flat unstayed circular heads, covers and blind flanges shall be calculated by the following formula:

$$t = d\sqrt{CP/SE} \qquad (1)$$

$$t_{min_w} := 2R_w \cdot \sqrt{\frac{C \cdot P_{MAWP}}{S_{304} \cdot E_w}} \qquad t_{min_w} = 1.1\,mm$$ OK

8. Gas System (in detail) (Tom Miller, designer)

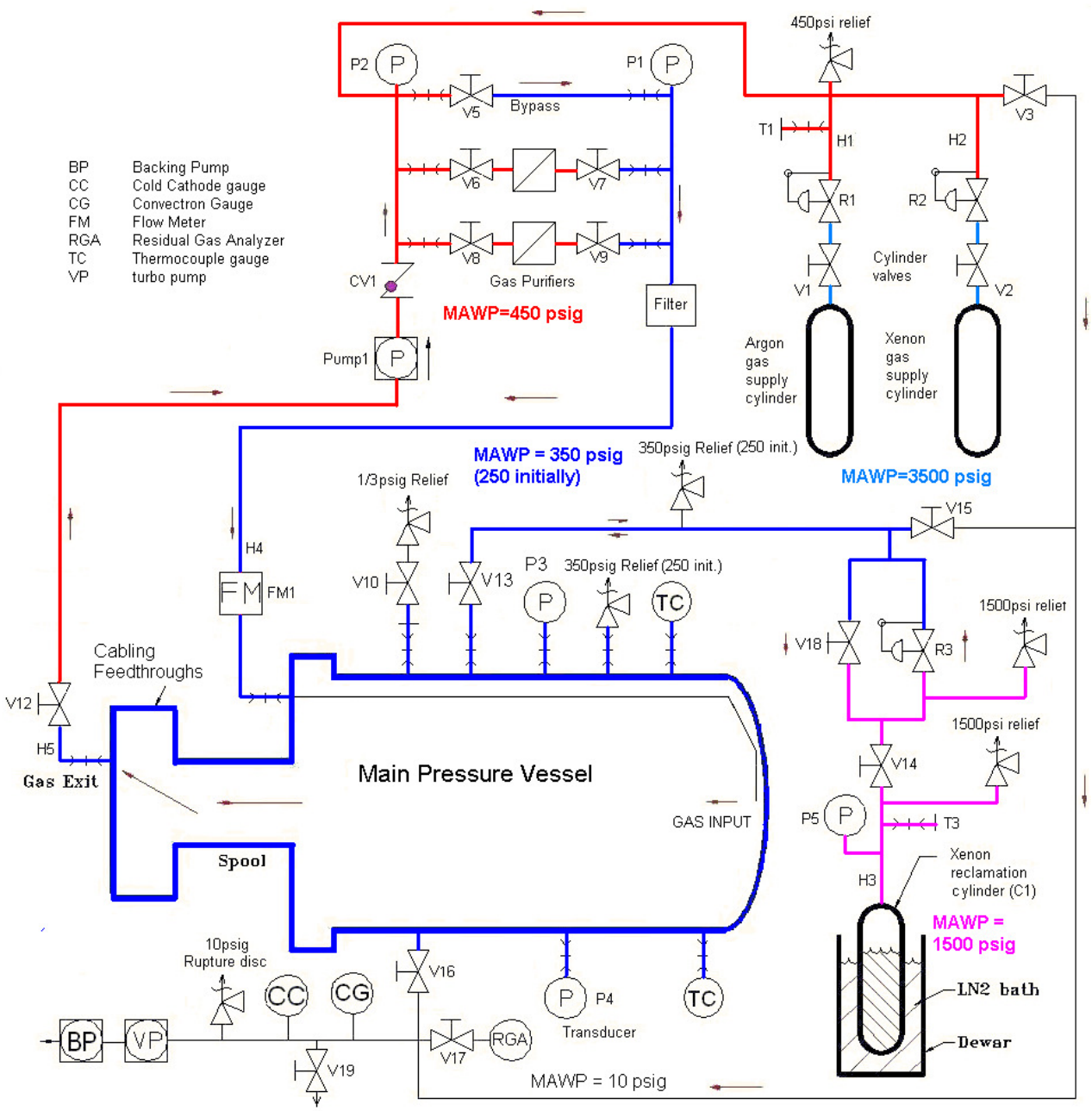

Fig. 15. Gas system (same as fig. 5)

Description:

This TPC (Time Projection Chamber) gas system is designed to circulate Xenon gas, through the pressure vessel and a purifier system at various pressures up to 300psig MOP (225 psig MOP initially with Ceramtec SHV-20 feedthroughs installed). It also includes a cryogenic Xenon reclamation section, as described previously. The AHD will initially specify only an 250psig MAWP (225psig MOP) with these feedthroughs, then it will be updated to the higher pressure MAWP (= 350 psig) only when these feedthroughs are replaced with higher pressure rated feedthroughs.

The gas system can be divided into 5 subsections, each having different MAWPs:

1. Gas supply subsystem MAWP =3500 psig (or gas cyl burst disk pressure)
2. Vacuum subsystem MAWP= 10 psig.
3. Pressure vessel and purifier downstream subsection,MAWP as above

4.Purifier upstream subsection; this MAWP is set 100 psi higher than the pressure vessel since Pump1 can deliver 130 psi maximum differential pressure if downstream flow is blocked; we desire not to vent Xenon gas should this occur (pump operated erroneously with [V3+V5+(V6 or V7)+(V8 or V9)] all closed.

5. Reclamation subsystem, MAWP =1500 psig

Operations

In operation, the procedures are sequential, unless otherwise indicated. There are steps inserted for checking valve status, **Valves** listed in **bold red** are **closed**; Valves listed in nonbold green are open. Note that there is no V4 or V11 ; these valves were present in an earlier draft configuration and have been removed. Valves have not been renumbered to avoid confusion.

1. Complete system pump-down

a. Close V1, V2 and V10. Open R1, R2, and R3 one turn each.
b. Open V5, V13-V16, V18. DO NOT open V6-V9.
c. **V1 V2** V5 **V6 V7 V8 V9 V10 V12** V13 V14 V15 V16 **V17 V18 V19**
d. Turn on the backing pump and convectron gauge controller
e. When the convectron gauge reads < 1e-2 torr, turn on the turbo pump and cold cathode gauge controller. Open V3 and V12.
f. When the cold cathode gauge reads < 5e-5 torr, open V17 and turn on the RGA.
g. If the system pressure and RGA scan are acceptable, turn off the RGA. If not, continue to pump until the pressure improves to an acceptable level.
h. Close V3, V13-V18. Back off R1, R2, and R3.
i. Turn off pumps and controllers.
j. **V1 V2 V3** V5 **V6 V7 V8 V9 V10** V12 **V13 V14 V15 V16 V17 V18 V19**
k. Proceed to step 3.

2. System pump-down with xenon in the Xenon reclamation cylinder

a. Close V1, V2 and V10. Open R1, R2, and R3 one turn each.
b. Open V5, V12-V13, V16, V18. DO NOT open V6-V9.
c. **V1 V2 V3** V5 **V6 V7 V8 V9 V10 V12** V13 **V14 V15** V16 **V17** V18 **V19**
d. Turn on the backing pump and convectron gauge controller
e. When the convectron gauge reads < 1e-2 torr, turn on the turbo pump and cold cathode gauge controller. Open V3.
f. When the cold cathode gauge reads < 5e-5 torr, open V17 and turn on the RGA.
g. If the system pressure and RGA scan are acceptable, turn off the RGA.
h. Close V3, V13, V16 and V17. Back off R1 and R2.
i. Turn off pumps and controllers.
j. **V1 V2 V3** V5 **V6 V7 V8 V9 V10** V12 **V13 V14 V15 V16 V17 V18 V19**
k. Proceed to step 3.

3. Argon purge

a. **V1 V2 V3** V5 **V6 V7 V8 V9 V10** V12 **V13 V14 V15 V16 V17 V18 V19**
b. Back off R1. Open V1.
c. Set R1 to 20psig.
d. Open V4.
e. Wait for P3 to read > 5 psi. Open V10 1/4 turn. Argon will bleed out the 5psig relief.
f. Wait 5 minutes, then close V10.
g. Start Pump1.
h. Once P3 reads 20psi, close V1 and V4. Back off R1.
i. Continue pumping for desired interval.
j. Turn off Pump1.
k. Open V10 to vent argon.
l. When P3 reads < 6psi, close V10, V12.
m. **V1 V2 V3** V5 **V6 V7 V8 V9 V10 V12 V13 V14 V15 V16 V17 V18 V19**
n. Proceed to step 4

4. Post-purge pump-down

a. **V1 V2 V3** V5 **V6 V7 V8 V9 V10 V12 V13 V14 V15 V16 V17 V18 V19**
b. Check that P3 reads < 6psi. Open V10 to relieve pressure. Close V10 when done.
c. Open V4 and crank down R1 1 turn.
d. Start the backing pump and convectron gauge controller.
e. Slowly open V16.
f. When the convectron gauge reads < 1e-2 torr, turn on the turbo pump and cold cathode gauge controller.
g. When the cold cathode gauge reads < 5e-5 torr, open V17 and turn on the RGA.
h. Close V4 and back off R1.
i. If the system pressure and RGA scan are acceptable, turn off the RGA, close V16 and V17.
j. Turn off pumps and controllers.
k. **V1 V2 V3 ~~V4~~** V5 **V6 V7 V8 V9 V10** V11 **V12 V13 V14 V15 V16 V17 V18 V19**
l. If the partial pressures are not acceptable, repeat procedure from step 3.
m. If the Xenon reclamation cylinder is filled, proceed to step 6.

5. Xenon reclamation cylinder fill procedure

a. **V1 V2 V3** V5 **V6 V7 V8 V9 V10 V12 V13 V14 V15 V16 V17 V18 V19**
b. Back off R2. Open V2 and V12.
c. Open V13, V14, and V18. Check that V10 is closed. Check that V5 is open.
d. Slowly set R2 to 200psig.
e. Read the gas temperature at the TC. When T > 15 deg C, continue to next step.
f. Slowly set R2 to 300psig (225psig initial)
g. Once P3 reads 300psig (225psig initial), close V2 and back off R2.
h. Chill C1 with LN until P4 bases out.
i. Close V14.
j. Open V2. Slowly set R2 to 50 psig.
k. Check P5 is based out.
l. Once P3 reads 50 psig, close V2, and back off R2.
m. Open V14.
n. Continue to chill C1 with LN until P4 bases out.
o. Close V13 ,V14 and V18. Stop chilling C1.
p. **V1 V2 V3** V5 **V6 V7 V8 V9 V10** V12 **V13 V14 V15 V16 V17 V18 V19**
q. Proceed to step 6.

6. Chamber fill from Xenon reclamation cylinder

a. **V1 V2 V3 V4** V5 **V6 V7 V8 V9 V10** V11 V12 **V13 V14 V15 V16 V17 V18 V19**
b. Back off R3. Check that V18 is closed. Open V14.
c. If P5 < 300psig (225psig initial) at any point in step 6, turn on heat to C1.
d. Once P5 > 300psig (225psig initial), set R3 to 200psig(150psig initial); turn off C1 heat.
e. Open V13.
f. Open V5.
g. When P3 reads 200psig, close V13.
h. Check the temperature at the TC. When T > 15 deg C, continue
i. Set R3 to 300psig (225psig initial).
j. Open V13.
k. When P3= 300psig (225psig initial), close V13 and V14.
l. Back off R3.
m. TPC is ready to operate.
n. **V1 V2 V3** V5 **V6 V7 V8 V9 V10** V12 **V13 V14 V15 V16 V17 V18 V19**

7. TPC operation

a. **V1 V2 V3** V5 **V6 V7 V8 V9 V10** V12 **V13 V14 V15 V16 V17 V18 V19**
b. Start pump1; set to desired flow rate
c. Open V6,V7 or V8,V9 as needed to control flow and purification (usually close V5 but may be left open)
d. Monitor total flow with FM1. Adjust pump controller as required.

e. Log flow and pressure at P4, if desired.
f. **V1 V2 V3 V5** V6 V7 **V8 V9 V10** V12 **V13 V14 V15 V16 V17 V18 V19** (V8,V9 may be open instead of V6,V7)

8. TPC shutdown
a. **V1 V2 V3 V5** V6 V7 **V8 V9 V10** V12 **V13 V14 V15 V16 V17 V18 V19**(V8,V9 may be open instead of V6,V7)
b. Stop pump1
c. Close V6-V9, Open V5.
d. Stop data logger.
e. **V1 V2 V3** V5 **V6 V7 V8 V9 V10** V12 **V13 V14 V15 V16 V17 V18 V19**

9. Cryogenic Xenon reclamation from TPC
a. **V1 V2 V3** V5 **V6 V7 V8 V9 V10** V12 **V13 V14 V15 V16 V17 V18 V19**
b. Open V13, V14, V18. Check V5 and V12 are open. Check R3 is fully backed off.
c. Chill C1 with LN.
d. Once P4 bases out, operate Pump1 (to rattle piston valves, hopefully releasing gas trapped between Pump1 and CV1); check for pressure spike; allow to base out.
e. Close V13, V14, V18.
f. **V1 V2 V3** V5 **V6 V7 V8 V9 V10** V12 **V13 V14 V15 V16 V17 V18 V19**

10. Let-up TPC to Argon
a. **V1 V2 V3** V5 **V6 V7 V8 V9 V10** V12 **V13 V14 V15 V16 V17 V18 V19**
b. Back off R1. Open V1.
c. Slowly open R1 to 2 psig.
d. When P3 > 2 psig, close V1. Back off R1 until desired purge gas flow is achieved.
e. Open V10. Leave open during servicing.
f. Proceed with service or disassembly of TPC. When removing lid, leave 1 main flange bolt loosely in place until lid is fully separated from vessel, and any residual pressure is vented.
g. **V1 V2 V3** V5 **V6 V7 V8 V9** V10 **V12 V13 V14 V15 V16 V17 V18 V19**

11. Replacement of Argon gas supply cylinder
a. **V1 V2 V3** V5 **V6 V7 V8 V9 V10 V12 V13 V14 V15 V16 V17 V18 V19**
b. Make certain V1 is closed. Back off R1.
c. Disconnect R1 from Ar cylinder.
d. Connect new Ar cylinder to R1.
e. Crank down R1 1 turn.
f. Open V3.
g. Start backing pump and convectron gauge.
h. When the convectron gauge reads < 1e-2 torr, turn on the turbo pump and cold cathode gauge controller.
i. When the cold cathode gauge reads < 5e-5 torr, close V3 and turn off pumps.
j. Back off R1.
k. **V1 V2 V3** V5 **V6 V7 V8 V9 V10 V12 V13 V14 V15 V16 V17 V18 V19**

12. Replacement of Xenon gas supply cylinder
a. **V1 V2 V3** V5 **V6 V7 V8 V9 V10 V12 V13 V14 V15 V16 V17 V18 V19**
b. Make certain V2 is closed. Back off R2.
c. Disconnect R2 from Xe cylinder.
d. Connect new Xe cylinder to R1.
e. Crank down R2 1 turn.
f. Open V3
g. Start backing pump and convectron gauge
h. When the convectron gauge reads < 1e-2 torr, turn on the turbo pump and cold cathode gauge controller.
i. When the cold cathode gauge reads < 5e-5 torr, close V3 and turn off pumps.
j. Back off R2.
k. **V1 V2 V3** V5 **V6 V7 V8 V9 V10 V12 V13 V14 V15 V16 V17 V18 V19**

13. Reclamation of Xenon back into Xenon gas supply cylinder (at end of experiment, or to repair or reconfigure reclamation gas subsystem; assume entire system is filled with Xe and reclamation cyl. C1 is not isolatable)

a. **V1 V2 V3** V5 **V6 V7 V8 V9 V10** V12 **V13 V14 V15 V16 V17 V18 V19**
b. Back off R2. Open V2. Check that V5 and V12 are open.
c. Chill Xe supply cyl. with LN until P3, P4 and R2 high side bases out. Maintain LN temp.
d. Open V13, V18 , and V14. Wait until P3, P4 and R2 high side base out. Maintain LN temp.
e. Start Pump1 (to rattle piston valves, hopefully releasing gas trapped between Pump1 and CV1).
f. Close V2, V5, V12, V13, V18, V14. Plug high side of R2.
g. Back off and disconnect R2 from Xe cylinder.
h. **V1 V3 V5 V6 V7 V8 V9 V10 V12 V13 V14 V15 V16 V17 V18 V19**

Relief Valve Capacity

There are no operating conditions whereby a sudden pressure rise can occur, such as a sudden release of energy leading to rapid gas heating, or loss of insulating vacuum. We consider some extraordinary circumstances:

Pressure Rise under Gas Cylinder Regulator Failure

This is probably the most credible mechanism for accidental overpressure (someone accidently screws a regulator all the way in, then opens a valve downstream) Regulators are Matheson Dual Stage High Purity Stainless Steel, model 3810 :

maximum flow rate (@2500 psi N2 inlet pressure)

$Q_{reg} := 300SCFH \qquad Q_{reg} = 5\ SCFM$

Pressure Relief valve is a Swagelok R4. From relief valve catalog ms-01-141.pdf, flow curves are:

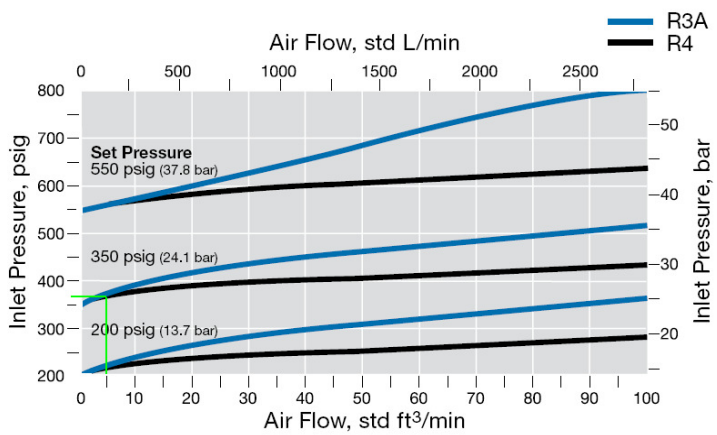

Fig 16. Pressure Relief Pressure Drop

For a set pressure of 350 psig, and a flow rate Q_{reg}, we find (green lines) an inlet pressure of:

$P_{inlet} := 370psi$ ASME Boiler and Pressure Vessel Code, Section VIII subsection UG-125 Overpressure Protection subsection (c) calls for (in this case) a maximum of 10% vessel overpressure under relief condition.

$\frac{P_{inlet}}{350psi} - 1 = 5.7\%$ OK

TPC Gas System parts list

ID	MFR.	Part Number	Note/Product Description	Pressure rating (psig)
	Swagelok			
V3,V4,V10,V11,V17		SS-8BG-V47-VD	1/2" valve Female VCR	1000
" (mixed)		SS-8BG-VCR-VD	1/2" valve Male VCR	1000
		SS-R4M8F8-SC11	Relief valve .25 orifice	6000
		SS-4R3A5	Relief valve .14 orifice	6000
		177-R3A-K1-A	350-750 psi spring kit for line 6	-
		177-R3A-K1-A	0-350 psi spring kit for line 6	-
		177-13K-R4-A	0-350 psi spring kit for line 5	-
		SS-FM4RM4RF4-12	1/4" VCR hose M/F fittings 12" lg	3100
		SS-4-VCR-7-8VCRF-SC11	1/2" to 1/4" VCR reducing adapter	14300
		SS-8-WVCR-6-DF-SC11	1/2" VCR close coupling	5800
		SS-8-VCR-T-SC11	1/2" VCR Tee	10900
		Ni--8-VCR-2-SC11	1/2" Ag plated Ni VCR gasket	-
		Ni-4-VCR-2-SC11	1/4" Ag plated Ni VCR gasket	-
		SS-8-VCR-CP-SC11	1/2" VCR cap	-
		SS-8-VCR-P-SC11	1/2" VCR plug	-
		SS-8-VCR-9-SC11	1/2" VCR elbow	10900
		SS-4-VCR-2-4-SC11	1/4" VCR elbow	14300
Filter		SS-6TF2-15-SC11	15 micron TF type filter 3/8 MPT	3000
		SS-8-VCR-7-6-SC11	3/8 NPT to 1/2" VCR female connector	5300
		SS-8-VCR-7-8-SC11	1/2 NPT to 1/2" VCR female connector	4900
		SS-4-VCR-1-4-SC11	1/4 NPT to 1/4" VCR male connector	8000
		SS-8-VCR-4-SC11	1/2" VCR Male tube nut	-
		SS-8-VCR-1-SC11	1/2" VCR female tube nut	-
		SS-4-VCR-4-SC11	1/4" VCR Male tube nut	-
		SS-4-VCR-1-SC11	1/4" VCR female tube nut	-
		SS-8-VCR-3-SC11	1/2" VCR socket weld	3000
		SS-6-VCR-3-SC11	1/2" VCR socket weld 3/8 tube	8200
		SS-FM4RF4RF4-36	1/4" VCR hose F fittings 36" lg	3100
		SS-FM4RM4RF4-48	1/4" VCR hose M/F fittings 48" lg	3100
		SS-FM4RF4RF4-24H	1/4" VCR hose F fittings 24" lg	3100
		SS-6-RB-4-SC11	3/8 NPT to 1/4 NPT reducing bushing	3000
		6LV-8-VCR-3S-4TB7	1/2 VCR to 1/4" tube reducing gland	5100
		-	3/8 OD x .035W 316SST Tubing	2936
		-	1/4 OD x .035W 316SST Tubing	4375
		SS-8-VCR-CS	1/2" VCR cross	10900
		SS-4-WVCR-1-4	1/4 NPT male to 1/4 VCR female	10200
		SS-4-VCR-T	1/4" VCR tee	14300
		SS-4-VCR-CS	1/4" VCR cross	14300
V13-V15,V18		SS-DSV51	1/4" VCR diaphragm valve	2500
		SS-4-WVCR-7-4	1/4" fem VCR to 1/4 fem NPT	6600
		SS-8-VCR-3-4TSW	1/2 VCR to 1/4" tube reducing gland	13600
		SS-4-VCR-3	1/4 VCR socket weld gland	5500
		SS-8-VCR-6-DM-4	Double male VCR reducing union 1/2 to 1/4	10900
		SS-4-VCR-7-4	1/4 male VCR to 1/4" NPT female	6600
		SS-4-VCR-1-00032	1/4 male VCR to 9/16-18 adapter	14300
		SS-8-VCR-1-01081	1/2 male VCR to 9/16-18 adapter	15000
		SS-4-VCR-3-4TA	1/4 swage to 1/4 VCR gland	10200
	McMaster-Carr			
P1,P2		4066K418	0-600 psig dry gauge	600
P3		4005K48	0-400 psig dry gauge	400
P5		3852K24	0-2000 psig dry gauge	2000
	Acme Cryogenics (for LLNL orig.)			
C1		C1	Xenon condensation cylinder	3000
	Pump Works Inc.			
P1		PW2070	Positive displacement pump	1400

60		SAES Pure Gas inc.			
61			HP190	inert gas purifier	1000
62			MC50	inert gas purifier	1000
63	V5-V9			valves supplied w/ above purifiers	1000
64		Carten			
65	V16		HF2000	2" straight thru valve	350
66		Matheson			
67	R1-R3		3818-580	15-350 psi regulator with G type inlet	3500
68		Omega			
69	FM1, FM2		FMA1818	flowmeter 5slpm	500
70	P		MMG500V10P3C0T3A6	500 psig pressure transducer	500
71	TC		EI1202105/TC-K-NPT-U-72/3"	Pipe plug TC probe	2500
72		Ceramtec			
73			18088-01-CF	SHV-20 Coaxial feedthrough, 1.33" CF flange	250
74			8880-02-CF	SHV-5 Coaxial Feedthrough, 1.33" CF flange	1400
75			18898-01-CF	Multipin feedthrough 2.75" CF flange, 32 pin	375

9. Test Procedures

9.1 Pressure Vessel and 350 MOP Head

These components have been tested at LLNL to higher pressures than used here. No retesting is needed, as there are no corrosive gasses or other materials used, and the vessel and lid have not been modified. Any minor modifications, such as rewelding a VCR fitting to the Vessel will require a retest. MESN-99-020-OA does not specify any retesting requirement. Since no cryogens are used, the vessel and head may be retested using a hydrostatic test in accordance with ASME Boiler and Pressure Vessel Code Section VIII, subsection UG-99 Standard Hydrostatic Test. Test pressure is 1.5x MAWP= 525 psig. Nevertheless, this component will be further tested, in its installed configuration, along with the gas system test at a test pressure of 1.25x MAWP = 438psig (313 initial).

9.2 Spool

This component will be hydrostatically tested by the manufacturer in accordance with ASME Boiler and Pressure Vessel Code Section VIII, subsection UG-99 Standard Hydrostatic Test, and tagged by the manufacturer, and may be used as received. Nevertheless, this component will be further tested, in its installed configuration, along with the gas system test at a test pressure of 1.25x MAWP = 438psig (313 initial).

9.3 Octagon

This component is not rated for pressure by the manufacturer, though the manufacturer does supply pressure rating recommendations. It shall be tested by either a certified pressure installer here at LBNL, or by an independent testing lab. It shall be tested using a hydrostatic test in accordance with ASME Boiler and Pressure Vessel Code Section VIII, subsection UG-99 Standard Hydrostatic Test. Test pressure is 1.5x MAWP= 525 psig. Nevertheless, this component will be further tested, in its installed configuration, along with the gas system test at a test pressure of 1.25x MAWP = 438psig (313 initial).

9.4 Source Insertion Tube

This component will be hydrostatically tested by the manufacturer in accordance with ASME Boiler and Pressure Vessel Code Section VIII, subsection UG-99 Standard Hydrostatic Test, and tagged by the manufacturer, and may be used as received. Nevertheless, this component will be further tested, in its installed configuration, along with the gas system test at a test pressure of 1.25x MAWP = 438psig (313 initial).

9.5 Gas system

All other attachments, fittings and components are pressure rated by the manufacturer as in the above table and may be used as installed up to MAWP. Nevertheless, this system will be tested, in its installed configuration, along with the gas system test at a test pressure of 1.25x MAWP = 438psig (313 initial), as described below:

9.6 Final assembled system pressure check

Completed gas system, including pressure vessel, shall be pneumatically tested to 125% MAWP in place using a remote test system comprising a gas cyl., regulator, gauge, test valve, and vent valve. There are three sections of the complete gas system having different MAWP's; therefore the test is in three parts. Test pressures for the 3 sections are (125%MAWP):

a. 438 psig (313 initial) for the pressure vessel (MAWP=350 psig/250 psig initially) ,
b. 563 psig for the gas purifier and supply section (MAWP=450 psig), and
c. 1875 psig for the cryogenic reclamation section (MAWP=1500 psig).

The test shall be repeated for each section that is modified. The test system and operator shall be located a minimum of 8 ft. from the main pressure vessel, with no line of sight to system (behind a barrier; this can be a room wall or the existing wall of cabinets and workbenches presently in 70A-2263). Testing is to be performed by a Certified Pressure Installer, and witnessed by the M.E. Dept. Designee for Pressure Safety, at a minimum. Note that there is no V4 or V11 ; these valves were present in an earlier draft configuration and have been removed. Valves have not been renumbered to avoid confusion.

Prepare for test as follows (initial each step)**:**

1. Procure:

a. Two full gas cylinders, size 200 SCFM or more of clean Ar, N2, CO2, or dry air with supply pressure 2200 psig min.

b. Calibrated test gauge(s) for reading 438 psig (313 initial), 563 psig, and 1875 psig to within 3% accuracy. Gauge maximum scale pressure should not be less that 1.2x or more than 4x the test pressure. Electronic gauges (calibrated) are permissible, and are not subject to the above range limitations.

c. Regulator(s), to provide above pressures in (b) to fit cyl. in (a).

d. 30-35 ft. long high pressure clean gas service (e.g. McMaster P/N 5665K34 2-3 ea) or PTFE lined high pressure chemical hose (e.g McMaster P/N 5830K21, or similar), 2000 psig rated (min.), and fittings to connect to gas system at T1, T3.

e. Pressure relief valves that fit exhaust ports of existing relief valves set to a minimum of 5% over test pressure (1.05x T.P. = 460 psig (329 initial), 591 psig, and 1968 psig), to fit exhaust ports of 350 psig (250 initial), 450 psig, and 1500 psig relief valves. These pressure relief valves should not be set higher than 33% of test pressure. See step 3 below for explanation.

f. Test pressure isolation valve, and fill vent valve, rated for test gas maximum pressure.

g. Test pressure release vent valve on Tee, both rated for test gas maximum pressure.

2. Assemble remote gas cylinder, regulator(RT), test gauge(GT) for 1875 psig test pressure, test isolation valve(TV), vent valve(VV), and fill vent valve (VF) as shown in fig. 17 below, and locate around corner from experiment, out of line sight, and behind wall of cabinets, or wall. Note that the pressure relief valve shown in fig. 17 is optional (see step 3 below for more explanation), since test feed ports T1 and T3 cannot be isolated from the system pressure relief valves.

3. Install 460 psig (329 initial), 591 psig, and 1968 psig relief valves into exhaust ports of 350 psig (250initial), 450 psig, and 1500 psig relief valves, respectively. Note that this is permissible only because the system pressure relief vaves used, (Swagelok R3, R4 high pressure) are designed to be insensitive to back pressure; other types of pressure relief valves can be sensitive to back pressure and must be plugged while a separate test pressure relief valve installed as shown on fig. 17 (not optional).

4. Survey for, and remove any hazardous material (such as radioactive sources, flammable liquids, glassware, etc.) from line of sight to test area. Also remove as many other valuable or potentially hazardous materials such as glassware, dewars, electronic equipment as practical. Have fire extinguishers on hand.

5. Check that gas system is fully depressurized. Open V4 if closed, to connect T1 with P2 and open V14 and V18 if closed, to read pressure all the way to V13.

6. Barricade test area to prevent personnel ingress, notify building manager of impending test. Clear area of all people except for pressure test operator and witness(es).

Test 1500 psig MAWP subsystem (first) as follows (can be skipped if not needed for section retest):

7. Close V13, V15, if open. Open V14, V18 if closed. Screw in handle of R3 all the way. Check that C1 is fully depressurized.

8. Unplug T3 and install test hose. Open VT, screw in RT handle; keep VV, test gas cyl valve closed.

9. Start the backing pump and convectron gauge controller, Slowly open V15. When the convectron gauge reads < 1e-2 torr, close V15, and turn off backing pump and convectron gauge controller. Close V15.

10. Close V18. Back off R3 handle fully. Check that V14 is open. Check that V13 is closed. Leave V15 closed.

11. Back off RT handle fully.

12. Open test gas cyl. valve 1-2 turns.

13. Screw in RT handle slowly, in steps in steps of 33% MAWP (500 psi), each time closing VT, and watching GT to see that stable pressures are achieved. Watch GT for 5 minutes minimum, each time. If leaks occur, back off pressure to 300 psig (20% MAWP) max. and inspect to find leak. See note on possible methods below fig. 17. Once found, back off RT fully, open VV to depressurize fully, and fix leak. If no leaks occur, continue increasing pressure (stepwise, as above) until 1500 psig reads on test gauge. Watch GT closely while increasing pressure to note when 1500 psig relief valves open; pressure should drop slightly for each one. If this is not observed, 1500 psig relief valve(s) may be leaking, or not opening properly, and step 15 below must be performed. Record pressures on system gauges. Increase pressure to 1875 psig. Hold for 5 minutes, if stable then back off RT, close test gas cyl. valve and release system pressure; otherwise depressurize and fix leak as above.

14. Remove 1968 psig relief valves from exhaust ports of 1500 psig relief valves.

15.(not necessary if both P.R valve openings observed in step 13). Close VV, and progressively repressurize system until relief valve exhausts, but not past 1600 psig. Depressurize and vent pressure. Adjust 1500 psig relief valve if needed and repeat this step.

16. Remove hose from T3, replace plug. Proceed to purge system as described in Gas System Operation.

Test 450 psig MAWP subsystem (next) as follows (skip steps 22-27 if not needed for section retest):

17. Check that entire system is depressurized.

18. Close valves V1-V9, V12, V15, V16, V17. Back off R1, R2.

19. Remove T1 plug and install hose end.

20. Start the backing pump and convectron gauge controller, Slowly open V3. When the convectron gauge reads < 1e-2 torr, close V3, and turn off backing pump and convectron gauge controller.

21. Check that installed test gauge, GT, and regulator, RT, are for 563 psig test pressure.

22. Open valves V6, V8 Check that valves V3, V5, V7,V9, V12, V15, V16, V17 are closed.

23. Back off RT handle fully.

24. Open test gas cyl. valve 1-2 turns.

25. Screw in RT handle slowly, in steps of 33% MAWP (150 psi), each time closing VT, and watching GT to see that stable pressures are achieved. Watch GT for 5 minutes minimum, each time. If leaks occur, back off pressure to 90 psig (20% MAWP) max. and inspect to find leak. See note on possible methods below fig. 17. Once found, back off RT fully, open test vent valve VV to depressurize fully, and fix leak. If no leaks occur, continue increasing pressure (stepwise, as above) until 450 psi reads on GT. Watch GT closely while increasing pressure to note when 450 psig relief valve opens; pressure should drop slightly. If this is not observed, 450 psig relief valve may be leaking, or not opening properly, and step 27 below must be performed. Record pressures on system gauges. Increase pressure to 563 psig. Hold for 5 minutes, if pressure is stable, then back off regulator fully, close test gas cyl. valve, and release system pressure through VV; otherwise depressurize and fix leak as above.

26. Remove 591 psig relief valve from exhaust port of 450 psig relief valve.

27. (not necessary if P.R valve opening observed in step 25). Close VV, and progressively repressurize system until 450 psig relief valve exhausts, but not past 475 psig. Depressurize and vent pressure. Adjust relief valve if needed then repeat this step.

Test main pressure vessel (directly following 450 psig MAWP subsystem) as follows:

28. Open valves V5, V12, V13. Close valves V6, V8, V10, V14, V15, V18. Leave valves V3, V16, V17 closed. Back off R3 handle fully.

29. Back off RT handle fully.

30. Open test gas cyl. valve 1-2 turns.

31. Screw in test regulator slowly, in steps of 33% MAWP (115 psi, 85 psi initial), each time closing VT, and watching GT, to see that stable pressures are achieved. Watch GT for 5 minutes minimum, each time. If leaks occur, back off pressure to 50 psig (20% MAWP) max. and inspect to find leak. See note on possible methods below fig. 17. Once found, back off RT fully, open VV to depressurize fully, and fix leak. If no leaks occur, continue increasing pressure (stepwise, as above) until 350 psig (250 initial) reads on GT. Watch GT closely while increasing pressure to note when 350 (250 initial) psig relief valves open; pressure should drop slightly for each one. If this is not observed, 350 psig (250 initial) relief valve(s) may be leaking or not opening properly, and steps 33-35 below must be performed. Record pressures on system gauges. If gas system pressure gauge (P3) cannot read higher than 438 (313 initial) psi, then hold for 5 minutes, then back off regulator, close test gas cyl. valve, and release system pressure. Remove P3, plug, and repressurize to 438 psig (313 initial) as above. Hold for 5 minutes, if stable, then back off regulator, close test gas cyl. valve and release system pressure; otherwise depressurize and fix leak as above. Replace P3, if removed.

32. Remove 460 psig (329 initial) psig relief valve from exhaust port of 350 (250 initial) psig relief valve located between V13 and V15.

33. (not necessary if both P.R valve openings observed in step 31). Close VV, and progressively repressurize system until 350 (250 initial) psig relief valve located between V13 and V15 exhausts, but not past 380 (275 initial) psig. Depressurize and vent pressure. Adjust relief valve if needed and repeat test.

34. Close V13, and remove 460 psig (329 initial) psig relief valve from exhaust port of 350 (250 initial) psig relief valve located on main pressure vessel.

35.Close VV, and progressively repressurize system until 350 (250 initial) psig relief valve located on main pressure vessel exhausts, but not past 380 (275 initial) psig. Depressurize and vent pressure. Adjust relief valve if needed and repeat test.

36. Remove hose from T1, replace plug.

37. Start the backing pump and convectron gauge controller, Slowly open V3. When the convectron gauge reads < 1e-2 torr, close V3, and turn off backing pump and convectron gauge controller. Close V3.

38. Attach pressure test tags to pressure relief valves. These are found in Appendix D of PUB3000. File pressure test report (also in Appendix D) with Regulator Shop.

Leak checking may be performed at full MAWP after successful pressure testing. No tightening of flange bolts or other repair is allowable when under pressure.

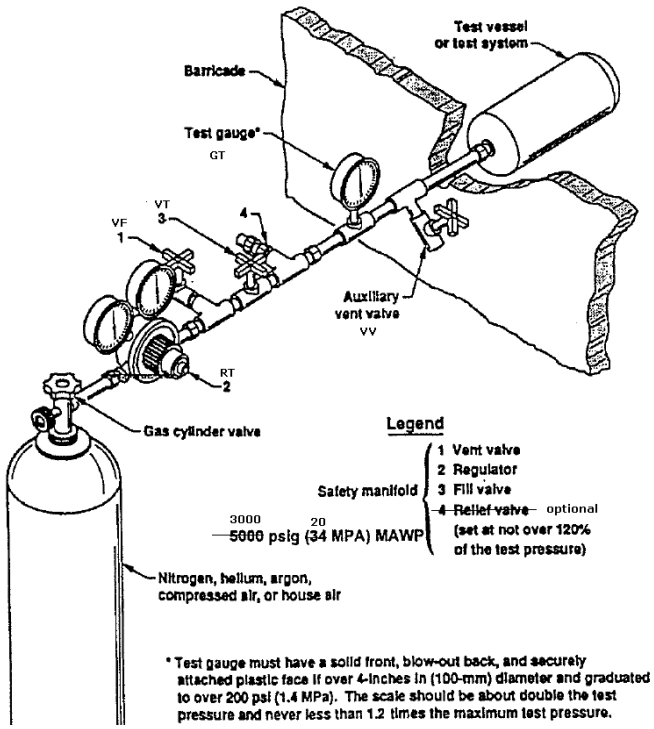

Fig. 17 Pressure Test Set up (Pneumatic, in-situ)

Leak Detection Methods for Pressure Leaks (not Vacuum):

Leak checking may be performed at full MAWP after successful pressure testing. Prior to pressure testing. leak checking may be performed up 20% MAWP

Methods (not conclusive):

1. Hi resolution Pressure gauge. P4 has very high resolution and when used in conjuction with TC can indicate very slow leaks over time. Fully isolating any leakage is not possible, of course.

2. SNOOP - this is essentially soapy water; - NOT PREFERABLE, as it may be pulled into vacuum. If used, clean area throughly with DI water afterwards before pulling vacuum.

3. Helium Leak Testing (sniffer) - DO NOT USE, glass in PMT's is very permeable to He, which will then ruin them.

4. Hydrogen Leak Testing (sniffer) - PREFERABLE, uses 5% H2/95% N2 nonflammable mix test gas. Sniff as with He using appropriate equipment.

5. Gas Bag - PREFERABLE, Wrap plastic bag material very loosely around suspect joint and seal tightly; watch for inflation.

6. LACO Technologies Gas Check 3000 (P/N LHHLD-G3), leak detector - PREFERABLE, which can sniff for a variety of different gasses based on differential thermal conductivity (to air).

10. Appendix

PDF page number

Main Pressure Vessel Pressure Tests (LLNL).....35
Main Pressure Vessel Design Safety Note MESN-99-020-OA (LLNL).....47
Gas Delivery System and Reclamation Cylinder Safety Note MESN99-38--OA (LLNL).....186
LLNL Note (END92-072-OA) on use of CF flanges for pressure Applications.....249
ANL Note on Tightening of CF flanges for Pressure Use.....264
Pressure Test Report for Spool 272
Pressure Test Report for Octagon.....273
Pressure Test Report and material certs for Source Tube.....275
Pressure Test Report for Gas System, reclamation subsystem.....280
Pressure Test Report for Gas System, Pressure vessel and Purification.....281

University of California
Lawrence Livermore National Laboratory

TEST AND RETEST REQUEST
HIGH PRESSURE LAB
B343 • Ext. 3-2745

TR Number	ME Number	TR Date
2743		5-19-99

Requested By	Extension	Pager	Building/Room	Account Number
DAN ARCHER / BOB PATTERSON	27599	56400	132 S-2223	8960-04

Engineering Safety Note Number	Job Description
MESN99-020-0A	8952-81
Requested Completion Date	

Type of Request:
☐ Burst ☐ Leak ☐ Inspection ☒ Proof Test ☐ Other

Test Fluid
☐ Water ☐ Helium ☒ Other (Specify) ARGON HIGH PURITY

Special Conditions	Specify Details	Other Details
☐ Toxic	☐ Data Acquisition	SEE ESN ULTRA HIGH PURITY
☐ Classified	☐ LVDT	SYSTEM 604 psig PROOF TEST

I, the requester of this/these test(s), realize that I am responsible for pointing out to the Building 343 Facility Personnel any known or expected hazardous conditions or materials, such as toxic or radioactive components, which could be generated or released during this/these test(s).

Robert B Patterson — Requester Signature

Charles V. Boylin — B343 Approval

RESULTS

Pressure tested #2 vessel ME-2285 to 604 psig
1.5 X MAWP (1.5 X 402 psig = 604 psig)
Held for 15 minutes - NO leak noted. Dropped to 150 psig and SNoop Leak check. - No Leak noted.
Conventional Vacuum Leak Check with leak detector using helium as leak source, Leak check - OK

Vessel #1 { Took to 1400 psig & held for seven minutes Found 4 5/8 Flange to be Leaking. Recomend puting Grade 8 bolts and nuts on this flange also. This vessel should be good for 900 MAWP per chuck Boylin.

vessel #1 Rechecked with Grade 8 Bolts + nuts Held Pressure no leak
Reduced to 150 psig and checked with SNOOP NO leaks found

Estimate of Time Charges	Estimate By	Total Time Charged	Work Performed By
			A/Juarez + V/Switzer

LL6448# v1.0 (7/97)

3 PAGES

Maintain Systems and Vessels

General Information (Format - Dates: MM/DD/YYYY ; Names: Last name, First name)

ME Test No	2286	RD No	
		Temp	
MAWP	150 PSIG	From 40	To 70 F
Status	Oper Mode Config	As of Date	As per Person
IN USE	Manned Vessel		
Inspector - Cert	FAIRCHILD, RICHARD F 002976	Insp - Trainee	Please specify
System Fluid	Helium		
Device Owner	002678	Designer	DOBIE D.
	HEFFNER, MICHAEL D Ex: LASTNAME, FIRSTNAME		
P/R #	Please specify		
Inspection Date	12/13/2006	Test Date	12/13/2006
Inspection Freq	3 years	Test Freq	6 years
Expiration Date	12/13/2009		
Safety Document		Secondary Safety Document	
MESN	01-091-OA		
Location	Facility	Room	
LLNL	194A	1131	
AD		PAD	
Department	Name not found		
Division	Name not found		
Assurance Manager	THOMSON, STEPHEN B	FPOC Alternate	SPRINGER, MICHAEL B
Facility Contact	LIND, SUSAN G	FPOC Exception	Name Not Found

Description (also appears on label)

"Main pressure vessel #1 (AAA98-104242, weld flange). Derated vessels on 8/31/01 to 150psig. Vessel feed thrus will not have blast covers. Vessel will expire on original experation date of 6/01/02.Stored in place as per Bob Foerschler 8/12/03"

Comments

This system was retested on 12/13/2006 to 225 for helium only at 130 PSIG .RF.Have tested an add on
cone and flang it was tested at 343 by RF on 3/5/07.

Save | Assign RD(s) | Print Labels | View Test Insp | New Test Insp | Copy

Maintain PTRS Tests and Inspections

Test Information (Dates should be in the format MM/DD/YYYY)

ME Test No	2286	Date	12/13/2006
Test Request No	TR-4191	Test Fluid	Helium
Test Pressure	225 PSIG	Test Temp	70 F

Size Measurements (pressure vessel tests ONLY)

Location (marked)	Before Test (inches)	After Test (inches)	Difference (inches)
Top			
Center			
Bottom			

Test Comments

This system was tested to 225PSIG with Helium and will be used with He only at 130 PSIG.

Inspection Information

Inspect the following and check the appropriate column, explaining as required. Status is OK or Not Applicable

Question	OK	N/A	Remarks
1. General appearance of system (or vessel)	●	○	
2. Relief devices are: a) properly set (have them checked - reset as required)	●	○	
b) properly seated	●	○	
c) pointed in safe direction or safely vented	●	○	
3. All fittings and vessel seals are leak tight	●	○	
4. Replaced or added fittings, gauges, valves (and piping*) are properly rated	●	○	
5. All system components are adequately secured	●	○	
6. Valve packing nuts are tight and locked (if locking type)	○	●	N/A
7. Oil is not apparent on or in* gas (especially oxygen) systems	●	○	
8. The outside surface of the vessel shows no evidence of strain, damage or corrosion.	●	○	
9. The inside surface of the vessel shows no evidence of strain, damage or corrosion.	●	○	
10. Lined vessel vent path is unobstructed: check with helium	○	●	N/A
11. Vessel or system seals are leak-tight. Have replaced as required	●	○	
12. The vessel or system is safe for continuing operation	●	○	
13. Vessel or system was pressure tested within the last 6 years, or as required by the safety note. If not, and certified for manned area operation, retest it and submit a Pressure Test Record.	●	○	

* consider assurance by the responsible user as satisfactory verification

This data applies to a ● Test ○ Inspection Only FAIRCHILD, RICHARD F 002976

LL3586 (Feb.2000); Send this completed form to the LLNL Pressure Inspector at L-383

Save | Go to Sys/Vess | Print Labels | Copy Test/Insp | Cancel

Maintain Relief Devices

General Information (Format - Dates: MM/DD/YYYY ; Names: Last name, First name)

RD Number	6224	ME #	
MAWP	151 PSIG		
Status DELETED		Deleted as of 03/01/2010	Deleted per Person CARTER, DARRELL D
Inspector	FAIRCHILD, RICHARD F 002976		
System Fluid	Helium		
Device Owner	141683 CARTER, DARRELL D Ex: LASTNAME, FIRSTNAME		
Inspection Date (MM/DD/YYYY)	12/11/2006		
Inspection Freq	3 years		
Expiration Date	12/11/2009		

P/R # 9785 - ST-TRED-TECHNOLOGY RESOURCES ENGINEERING

Safety Document N/A	Secondary Safety Document		
Location LLNL	Facility 194A	Room 1131	
AD	ST-ENGR-ENGINEERING	PAD	ST-ST PAD-SCIENC TECHNOLOGY
Department	Name not found		
Division	ST-TRED-TECHNOLOGY RESOURCES ENGINEERING		
Assurance Manager	THOMSON, STEPHEN B	FPOC Alternate	SPRINGER, MICHAE
Facility Contact	LIND, SUSAN G	FPOC Exception	Name Not Found
Comments			

Save Copy Cancel

Maintain PTRS Tests and Inspections

Test Information (Dates should be in the format MM/DD/YYYY)

ME Test No	2356	Date	12/03/1999
Test Request No	TR-2833	Test Fluid	Argon
Test Pressure	604 PSIG	Test Temp	70 F

Size Measurements (pressure vessel tests ONLY)

Location (marked)	Before Test (inches)	After Test (inches)	Difference (inches)
Top			
Center			
Bottom			

Test Comments

RD 6901 and RD 7319 have a 402 PSIG MAWP and will be used with pressure vessels #1 and # 2. Used with ME2349, ME2350, ME2351, ME2352, and ME2353. 2 Flanges were made under the same drawing number Modified Test temp -320

Inspection Information

Inspect the following and check the appropriate column, explaining as required. Status is OK or Not Applicable

Question	OK	N/A	Remarks
1. General appearance of system (or vessel)	●	○	
2. Relief devices are: a) properly set (have them checked - reset as required)	●	○	
b) properly seated	●	○	
c) pointed in safe direction or safely vented	●	○	
3. All fittings and vessel seals are leak tight	●	○	
4. Replaced or added fittings, gauges, valves (and piping*) are properly rated	●	○	
5. All system components are adequately secured	●	○	
6. Valve packing nuts are tight and locked (if locking type)	○	●	N/A
7. Oil is not apparent on or in* gas (especially oxygen) systems	●	○	
8. The outside surface of the vessel shows no evidence of strain, damage or corrosion.	●	○	
9. The inside surface of the vessel shows no evidence of strain, damage or corrosion.	●	○	
10. Lined vessel vent path is unobstructed: check with helium	○	●	N/A
11. Vessel or system seals are leak-tight. Have replaced as required	●	○	
12. The vessel or system is safe for continuing operation	●	○	
13. Vessel or system was pressure tested within the last 6 years, or as required by the safety note. If not, and certified for manned area operation, retest it and submit a Pressure Test Record.	●	○	

* consider assurance by the responsible user as satisfactory verification

This data applies to a ○ Test ○ Inspection Only JUAREZ, ALBERT 454886

LL3586 (Feb.2000); Send this completed form to the LLNL Pressure Inspector at L-383

Save | Go to Sys/Vess | Print Labels | Copy Test/Insp | Cancel

Maintain Systems and Vessels

General Information (Format - Dates: MM/DD/YYYY ; Names: Last name, First name)

ME Test No 2356

RD No

MAWP 402 PSIG

Temp From -320 To 70 F

Status STORED

Oper Mode Manned

Config Vessel

Stored as of 09/17/2004

Stored per Person DATA MIGRATION - M

Inspector - Cert JUAREZ, ALBERT 454886

Insp - Trainee Please specify

System Fluid Ar/CH4/CO2/He/P10/Xe

Device Owner 002103

SPRINGER, MICHAEL B

Ex: LASTNAME, FIRSTNAME

Designer DOBIE D.

P/R # Please specify

Inspection Date 12/03/1999

Test Date 12/03/1999

Inspection Freq 3 years

Test Freq 6 years

Expiration Date 12/03/2002

Safety Document MESN 99-020-OA

Secondary Safety Document

Location LLNL

Facility 132S

Room 2723

AD

PAD

Department Name not found

Division Name not found

Assurance Manager THOMSON, STEPHEN B

FPOC Alternate GOVERNOR, EDWARD J

Facility Contact MCANENEY, GERALD P

FPOC Exception Name Not Found

Description (also appears on label)

Comments

"Flange, 350 MOP, CF type head, AAA98-104240-00 Stored in place as per Bob Foerschler 8/12/03"

Save | Assign RD(s) | Print Labels | View Test Insp | New Test Insp | Copy

Cancel

Maintain PTRS Tests and Inspections

Test Information (Dates should be in the format MM/DD/YYYY)

ME Test No	2285	Date	03/05/2010
Test Request No	1458	Test Fluid	Helium
Test Pressure	225 PSIG	Test Temp	70 F

Size Measurements (pressure vessel tests ONLY)

Location (marked)	Before Test (inches)	After Test (inches)	Difference (inches)
Top			
Center			
Bottom			

Test Comments

This system was tested to 225 PSIG with helium to be used with helium only at 130PSIG.

Inspection Information

Inspect the following and check the appropriate column, explaining as required. Status is OK or Not Applicable

Question	OK	N/A	Remarks
1. General appearance of system (or vessel)	●	○	
2. Relief devices are: a) properly set (have them checked - reset as required)	●	○	6262
b) properly seated	●	○	
c) pointed in safe direction or safely vented	●	○	
3. All fittings and vessel seals are leak tight	●	○	
4. Replaced or added fittings, gauges, valves (and piping*) are properly rated	●	○	
5. All system components are adequately secured	●	○	
6. Valve packing nuts are tight and locked (if locking type)	○	●	N/A
7. Oil is not apparent on or in* gas (especially oxygen) systems	●	○	
8. The outside surface of the vessel shows no evidence of strain, damage or corrosion.	●	○	
9. The inside surface of the vessel shows no evidence of strain, damage or corrosion.	●	○	
10. Lined vessel vent path is unobstructed: check with helium	○	●	N/A
11. Vessel or system seals are leak-tight. Have replaced as required	●	○	
12. The vessel or system is safe for continuing operation	●	○	
13. Vessel or system was pressure tested within the last 6 years, or as required by the safety note. If not, and certified for manned area operation, retest it and submit a Pressure Test Record.	●	○	

* consider assurance by the responsible user as satisfactory verification

This data applies to a ○ Test ● Inspection Only SWITZER, VERNON A 876136

LL3586 (Feb.2000); Send this completed form to the LLNL Pressure Inspector at L-383

Save | Go to Sys/Vess | Print Labels | Copy Test/Insp | Cancel

Maintain Systems and Vessels

General Information (Format - Dates: MM/DD/YYYY ; Names: Last name, First name)

ME Test No 2285 RD No 6262

MAWP 150 PSIG Temp From 40 To 70 F

Status IN USE Oper Mode Config Manned Vessel As of Date As per Person

Inspector - Cert SWITZER, VERNON A 876136 Insp - Trainee Please specify

System Fluid Helium

Device Owner 002678 Designer DOBIE D.

HEFFNER, MICHAEL D

Ex: LASTNAME, FIRSTNAME

P/R # 9785 - ST-TRED-TECHNOLOGY RESOURCES ENGINEERING

Inspection Date 03/05/2010 Test Date 12/13/2006

Inspection Freq 3 years Test Freq 6 years

Expiration Date 03/05/2013

Safety Document MESN 01-091-OA Secondary Safety Document

Location LLNL Facility 194A Room 1131

AD	ST-ENGR-ENGINEERING	PAD	ST-ST PAD-SCIENCE, TECHNOLOGY
Department	Name not found		
Division	ST-TRED-TECHNOLOGY RESOURCES ENGINEERING		
Assurance Manager	THOMSON, STEPHEN B	FPOC Alternate	SPRINGER, MICHAEL B
Facility Contact	LIND, SUSAN G	FPOC Exception	Name Not Found

Description (also appears on label) Comments

Pressure vessel #2. Derated vessels on 8/31/01 to 150psig. Vessel feed thrus will not have blast covers. Vessel will expire on original experation date of 6/01/02. Stored in place as per Bob Foerschler 8/12/03

This system was tested on 12/13/2006 to 225PSIG with Heluim for use with He only at 130PSIG .RF Have tested an add on cone and flang it was tested at 343 by RF on 3/5/07.

Save | Assign RD(s) | Print Labels | View Test Insp | New Test Insp | Copy | Cancel

New Technologies Engineering Division

Mechanical Engineering Safety Note

Time Projection Chamber

MESN99-020-OA

April 26, 1999

Prepared By: Douglas Dobie
Douglas Dobie, Mechanical Engineer, Pressure Consultant

Reviewed By: Robert T. Patterson
Robert Patterson, Engineer Technical Associate

Reviewed By: Terry D. Alger
Terry Alger, Mechanical Engineer

Approved By: S. V. Kulkarni
Satish Kulkarni, NTED Division Leader

Reviewed By: Knud H. Pedersen
Knud Pedersen, Pressure Consultant

Distribution:

T. Alger	L-045	High Pressure Lab	L-384
D. Dobie	L-142	Eng. Records Ctr.	L-118
S. Kulkarni	L-113		
R. Patterson	L-171		
E. See	L-186		
D. Archer	L-188		

Contents

A. Description 3

B. Operational Hazards 5

C. Procedures 5

D. Calculations 5

Vessel 6

Head / Flange Calculations 7

Fracture Critical Components 11

Fragment Hazard Mitigation 12

E. Testing Requirements 13

F. Labeling Requirements 13

G. Associated Procedures 15

H. References and Notes 15

APPENDIX A: PROOF TESTING PROCEDURE FOR THE TPC 16

APPENDIX B DRAWINGS 20

APPENDIX C CALCULATIONS 33

A. Description

This safety note covers the design of time projection chambers (TPC) used in a full volume imaging detector. The chambers are used in building 132N, room 2723. There are three parts to the full volume imaging detector system. The first part is the gas purification subsystem that is used to purify and deliver electronegative free (99.9999999%) gas. This part of the system is being built commercially by Insync Systems. The second part of the system, designed and built at LLNL, includes the time projection chambers (TPC) where the experiments will be performed. Gas, from the purification panel, feeds the TPC's that will nominally operate at 300 psig but are being designed for 350 psig maximum operating pressure (MOP). It will be necessary to work around the TPC's with radioactive sealed sources for testing and calibration; thus this is a manned operation. The third part of the system uses cylinders to reclaim the purified gas. These cylinders have been fabricated by ACME CRYOGENICS INC. and are rated by them at 3000 psig MAWP. Gas will be transferred in the TPC system by thermal cycles, using LN2 to create the temperature gradient inside the chamber via conduction through the walls of the cryogenic thimble. A certain percentage of alcohol may be used in the LN2 bath to move the temperature of the bath above 73K.

The TPC's are the experimental chambers designed at LLNL. These chambers are used for two purposes but were mechanically designed to be identical. The first chamber will be used as an ionization chamber where electron drift will be used as a measure of gas purity. The second chamber is the actual TPC itself, which is used for position sensitive readout of electron clouds and hence gamma ray imaging. Figure 1 depicts a TPC with its associated hardware. In the experimental setup, the chambers are connected together with high pressure tubing. The chambers have been designed to allow a 400 keV gamma ray to penetrate the chamber wall in well-defined places, specifically in the center of the 2 3/4 inch conflat flange and in a linear series of VCR blanks on the side of the chamber. It will be necessary to use radioactive sources in conjunction with these windows to probe the capabilities of the chamber. The 1 3/4 inch conflat flanges has been outfitted with a high voltage (20 kV) ceramic feedthrough from Ceramaseal. Many of the penetrations into the chamber and the internals of the chamber are attached to the conflat gasketed chamber head to allow easy removal from the chamber body. The chambers will be filled with a gas (Ar, Xe, along with at least one the following: CH4, CO2, and P10) using the 135psi gas purification system and then condensed by cooling the chamber using a cryogenic thimble. LN2 will envelope the outside of the thimble creating non-uniform thermal stresses along with membrane stress throughout the vessel.

This ME Safety Note is required because the TPC of the system contains compressed gas at pressures exceeding 150 psig or 100kJ of stored energy. This Safety Note covers the vessel depicted in Figure 1 up to and including the output connections. If required, a separate safety note will cover the remaining parts of full volume imaging detector system less the TCP's.

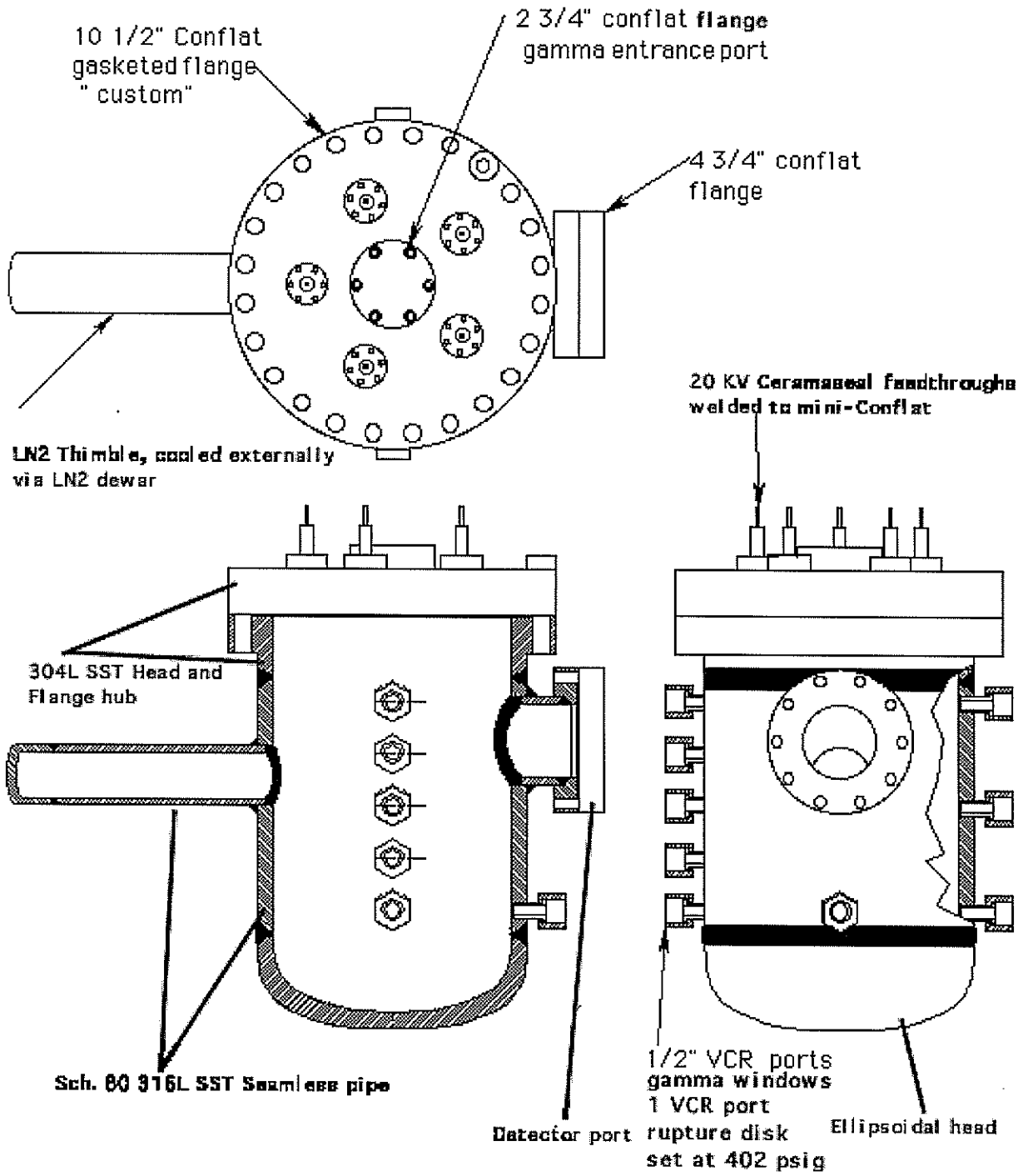

Figure 1 – Diagram of the Time Projection Chambers (TPC)

B. Operational Hazards

Associated hazards are those typical of any high pressure gas system. Failure of a vessel or component could result in either shrapnel or a blast overpressure to the body. Since the gases involved are not air, there is also the potential concern of asphyxiation. Other hazards include physical exposure to the radioactive sealed source and cold temperatures. The hazards other than those associated with the pressure vessel will be addressed by the FSP (if applicable) or separate OSP for this experiment.

C. Procedures

Design safety factors are robust for all intended pressures. The system is adequately protected by a pressure relief device at a VCR port so that components cannot be over-pressurized. This document also specifies shielding requirements for personnel protection from shrapnel in the event of an accident. However, an OSP for this experiment will address associated interlocks and operational steps required during pressurization.

D. Calculations

The following will certify the TPC for this system:

[1] Hardware and Fabrication
The vessel is fabricated using commercially purchased metals. Fabrication and joining techniques are also standard technology. Welding was performed by LLNL ASME certified welders experienced in pressure systems.

[2] Engineered Design
The system design has relief devices at strategic locations (a VCR fitting) to insure that the MAWP's are never exceeded.

An evaluation of high risk pressure components indicated that a Ceramaseal feed-through may fail if improperly handled. Specifically, the weld joint at the Conflat is susceptible to bending and fracture. To minimize this risk, a fragment deflector/stop fixture was designed and will be mounted in front of the head where the Ceramaseal is mounted. A Kevlar drape will also be employed if this device fails to capture all fragments. This stop and Kevlar drape will be interlocked during pressure vessel operation.

[3] Testing
Detailed proof testing procedures at 1.5 times MAWP and at the working temperature, induced by LN2 cooling, have been developed and are enclosed as Appendix A. Successful completion of these procedures by a LLNL pressure inspector will complete the certification of the TPC's. Proof testing is the crux of pressure vessel qualification for fracture critical components and is best stated from literature[5] as follows:

"The critical flaw size associated with proof test conditions can also be used for life expectance considerations. Specifically, if a pressure vessel survives a given proof test it can be concluded that the largest defect present in the structure is smaller than the critical flaw size at the proof test conditions. Therefore, in the absence of non-destructive inspection, this flaw size can be considered the existing flaw size at the beginning of life at the operating conditions and would, in turn, serve as the basis for further crack growth consideration"[5] (also see fracture analysis below).

The vessel has been designed to meet ASME Boiler and Pressure Vessel Code design guidelines. Stresses are low enough to eliminate the need for impact testing of the material in the heat effected zones created by the butt welds, UHA-51 (g) (see misc.nb calculations in Appendix C). The ASME Code also exempt austenitic, chromium-nickel stainless steels from impact testing, UHA-51(d)(1)(a). Thus, the base materials 304L and 316L are exempt.

[4] Calculations

Most calculations were done using ASME Pressure Vessel Code, Section VIII, Division 1 guidelines. The TPC has a MAWP of 978 psig when using the C-Ring type head (no openings) and 402 psig for the Conflat type head(s) (with and without openings). A future addendum to this safety note will cover a head (with openings) to be used at 978 psig MAWP. The allowable stresses used in all calculations are based on values found in the ASME Pressure Vessel Code, Section II. *For both 316L and 304L the allowable stress is 16,700 psi which provides a* ***nominal Safety Factor of ~5*** *in all Pressure Vessel Code calculations (i.e., head thickness, maximum vessel pressure, minimum wall thickness, etc).* The following tables are summaries of the detailed calculations found in Appendix A.

Vessel

The energy in each pressure vessel was calculated to be 55, 852 ft-lb. or 16.4 g TNT at the MAWP of 978 psig. The following table summarizes the analytical results for the main 8 inch schedule 80 pressure vessel, the detector pipe, the VCR "Cajon" fittings/ pipes, and the LN_2 pipe connected to the main vessel. All tubing is 316L. Calculations were made at a MAWP of 978 psig. The last column refers to the ratio of yield stress (37ksi) to Von Mises stress at the test pressure of 1.5 x MAWP. Values must be greater than 1.0 for a safe proof test.

	S1 (psi)	S2 (psi)	S3 (psi)	Von Mises (psi)	Required wall thickness (in)	Actual wall thickness (in)	If $\geq$ 1.0 stress less than yield for 1.5xMAWP
Main 8" vessel	3499	7976	-978	7755	0.336	0.500	3.2
Detector pipe 2.87 OD	1839	4657	-978	4880	0.102	0.275	5.1

VCR pipe 0.5" OD	1739	4455	-978	4705	0.012	0.050	5.2
LN2 pipe 1.9" OD	1618	4214	-978	4496	0.066	0.200	5.5

Analytical results for welds, area reinforcement, and their related loads that attach the detector pipe, LN_2 pipe, and VCR pipe to the main vessel shell are detailed in the table below at a MAWP of 978 psig. Generally, if the nozzle and fillet weld load paths are greater than the total weld load, then the strengths are sufficient. The total weld load (W~(Area required – Area available)*Allowable stress)) for the VCR pipe is less than 0 because the vessel wall is 0.160" thicker than required creating much more area available than required. Thus, the area available is greater than the area removed and a negative number results.

	Area of mat'l. required (in^2)	Area of mat'l. avail. (in^2)	Total weld load (lb)	Nozzle wall load path (lb)	Fillet weld load path (lb)
Detector pipe	0.780	0.800	8172	13172	12749
LN_2 pipe	0.504	0.508	5396	6243	6106
VCR pipe	0.134	0.194	< 0	413	402

The butt welds connecting the hub to the main vessel and the ellipsiodal head to the main vessel, the ellipsiodal head on liquid nitrogen pipe, and the hub to the detector pipe, reduced the allowable working pressure in the vessel they are connected to by 'E' (butt weld efficiency). An 'E' of 0.7 was used for these welds which reduced their associated allowable working pressures to 1421 psig, 6979 psig, and 6139 psig for the of the main vessel, LN pipe, and detector pipe respectively. Again, all of these calculated pressures use an allowable stress of 16,700 psi which has a nominal SF = 5.0 so an additional SF of 1.5 (1421 / 978) is obtained. Using a butt weld efficiency of 0.7 allows no radiography to be performed on the welds according to the ASME Boiler and Pressure Codes.

The VCR, LN_2, and detector port openings in the vessel shell are mounted 90° to each other. The radial distance between hole centers is approximately 6.0 inches. ASME Boiler Code requires that all openings be less than the sum of their respective diameters. The maximum sum of the diameters is 3.37 inches between LN_2 and the detector port.

Holes that do not penetrate the vessel shell may be required to horizontally mount the vessel. The depth of tapped 1/4-20 holes and 3/8-16 holes shall be ≤ 0.25 inches. Holes can not be placed near other openings or reinforcements.

Head / Flange Calculations

The following table summarizes the analytical results for the integral flange butt welded to the main access port and the small flange butt welded on the side of the

vessel (detector port). Again, the allowable stress in 16,700 psi for the base material. Also, the ASME allowable hub stress is 1.5 time the allowable stress.

Flange	MOP	Longitudinal hub stress (psi)	Radial flange stress (psi)	Tangential flange stress (psi)
Main 10.5" OD	850	16973	6327	4173
Main 10.5" OD	350	6388	2381	1571
Detector 4.625" OD	850	13998	2794	7367

The head for operating at 850 psig, uses a C-Ring type metal seal and is made from 304L stainless steel. The (24) required bolts for this flange are Unbrako KS 1216 1/2"-13 SHCS with a tensile strength of 160,000 psi (or 304 Stainless Steel with a 81 ksi tensile strength). The main flange for operating at 350 psig is a Conflat (CF) type (304L), sealed with a soft copper flat gasket to a knife edge. The (24) required bolts for this flange are Unbrako KS 1216 1/2"-13 SHCS with a tensile strength of 160,000 psi (or 304 Stainless Steel with a 81 ksi tensile strength). All other CF flanges (1 1/3 and 2 3/4 inch) shall be bolted to the 350 MOP head using Unbrako KS 1216 psi (or 304 Stainless Steel with a 81 ksi tensile strength), 8-32 or 1/4-28 SHCS as required.

The smaller 4 5/8" CF type flange for the detector port requires 10 bolts, Unbrako KS 1216 5/16"-24 SHCS with a tensile strength of 160,000 psi (or 304 Stainless Steel with a 81 ksi tensile strength) and is made from 304L stainless steel. The following table summarizes the fastener calculations.

Flange	MOP	No. of bolts	Bolt	Torque (in-lb)	Flange design bolt load, operating. (lb)	Flange design bolt load, gasket seal. (lb)	Max. allowable bolt load (SF 4 applied)
Main, C-ring 10.5" OD	850	24	1/2-13	1140	58850	96913	134976
Main, CF 10.5" OD	350	24	1/2-13	1140	24677	79827	134976
Detector 4.625" OD	850	10	5/16-24	347	10144	15452	20760
1 1/3" CF	350	6	#8-32	51	231	230	2936
2 3/4" CF	350	6	1/4-28	152	1015	527	7937

Analytical results for the commercially purchased SA316 ellipsiodal head on main vessel, nominal wall thickness 0.5 inches and the SA316 ellipsiodal head on liquid nitrogen pipe, nominal wall thickness 0.2 inches follows. The head

thickness calculations were done at the MAWP of 978 psig and allow for strength reduction due to the butt weld connecting them to the vessel.

	MOP	Max. pressure (psig)	Required head thickness (in)	Actual head thickness (in)	If ≥ 1.0 stress less than yield for 1.5x MAWP
Main vessel	850	1513	0.320	0.500	1.03
LN_2 pipe	850	3036	0.063	0.200	2.07

Results of the unstayed flat heads are presented in the table below. Two head types are planned for the main vessel, one CF type for low pressures at 350 MOP that has instrumentation ports, and one C-Ring type for high pressure (850 MOP) for vessel pressure testing and to be modified for a future head design (and subsequently proof tested along with a Safety Note Addendum). Stress concentration factors for the circular holes in a plate with internal pressure were used from empirical data in Wiley[2]. Although not a perfectly matching model to Wiley, the concentration factors used are conservative. The stress concentration factor (2.278) reduced the allowable stress to 7,331 psi from 16,700 psi. Hole reinforcement requirements were also calculated using the ASME Codes. These results confirmed the thickness requirements using Wiley stress concentration factors.

Results of two types of Conflat feedthrough heads mounted to the 10.5 inch CF flange are also presented below. All head thickness calculations use the ASME head equation involving bending with the exception of the 2 3/4 inch CF where both bending and no bending cases were used. This flange was bored out to leave a head depth of 0.125" by 1.5" in diameter. The flange thickness around its mounting holes and under its knife edge remains at the nominal flange thickness of 0.5 inches. Thus, calculations were made for both and summarized below. A minimum thickness for the 1/2 inch VCR plug is calculated. The pressure side of a VCR plug is bored out 1/4 inch in diameter to this minimum thickness to be used as a gamma port.

Flange type	MOP	Required head thickness (in)	Actual head thickness (in)	Required hub thickness (in)	Actual hub thickness (in)
Conflat flange, Cu seal AAA99-104240	350	1.261	1.5	0.624	1.250
C-Ring type metal seal. AAA99-104243	850	1.247	1.980	0.661	1.250
Conflat flange, 4 5/8" Ø, x 0.750" thick. Commercial product	850	0.613	0.750	0.423	0.810

1 1/3" CF	350	0.100	0.300	N/A	N/A
2 3/4" CF	350	0.178 / 0.092	0.5 / 0.125	N/A	N/A
VCR plug	850	0.052	0.052	N/A	N/A

Blind holes in the unstayed flat head were analyzed on the basis of area replacement. If the actual cross-sectional area available was greater than the cross-sectional area required, reinforcement was not required. The following table summarizes the results for the 350 MOP flat head. These calculations can also apply to blind mounting holes of the same dimension for mounting and handling the head with the caveat that hole can not be placed near other openings or reinforcements.

Hole type:	Area available (in^2)	Area required (in^2)
8-32 mini conflat holes	0.195	0.051
8-32 mounting bracket holes (internal)	0.205	0.041
1/4-28 medium conflat holes	0.250	0.125

Conflat (CF) flanges are used as connecting members and instrumentation feedthroughs in this pressure vessel design. Five 1 1/3 inch on a 5.5 inch bolt circle pattern and one 2 3/4 inch centrally located CF flanges are used on the 350 MOP head. A 4 5/8 inch CF flange is used on the detector port (850 MOP).

CF flanges were pressure tested in 1992 under the safety note END 92-072. The 1 1/3 inch nominally sized CF flanges with stainless steel bolts started leaking at ~15,000 psi. The 4 5/8 inch CF flange had no leakage with water as the pressure medium up to 1200 psi and minor (10^{-6} Torr-L/s) leaking with helium from 500 psi to 930 psi. All tests were done <u>without</u> catastrophic failure. Leakage occurred around the copper seal. A blank 2 3/4 inch was not proof tested.

For operation, the mating 1 1/3 inch CF flange to the CF port on the 350 MOP head has a high voltage feedthrough that is not rated by the manufacturer (Ceramaseal) because it is a special order. The manufacturer welded the high voltage feedthrough to an opening in the flange. LLNL has proof tested this component to burst (5850 psi). There is a concern for brittle fracture or weld failure due to cracking by mishandling that is addressed in the Fragment Hazard Mitigation paragraph below. The mating 2 3/4 inch CF flange will be proof tested at 604 psig along with the rest of the head. The mating 4 5/8 inch CF flange will be blanked off for pressure testing and initial operational tests. An addendum to this note will follow at a later date to address the attachment method of the detector to the mating flange. It will then be proof tested at 1467 psig.

Fracture Critical Components

This vessel is considered a Category IV risk according to MEDSS. Its failure has the potential for moderate injury and material testing is recommended.

The material used in this vessel is standard ASTM 304L and 316L stainless steel. Material testing was not done for the following reasons:

(1) SA316L and SA304L are standard materials with strict manufacturing requirements.
(2) ASME Boiler and Pressure Vessel Code does not require testing for austenitic stainless steels.
(3) the large critical crack depths (a_{cr}) and lengths calculated using conservative stress intensity factors (K_{Ic}) from literature.
(4) the number of cycles to failure were > 10^5; far larger than the ≤ 10^2 cycles expected using crack growth rates[7] from literature.
(5) The leak-before-break criterion is satisfied by a factor of ~10 or greater (136740 / 13824). Also, the CF type flanges used in the TPC design practically guarantee a leak before failure as demonstrated by earlier proof testing.
(6) 316 and 304 stainless steel both have excellent toughness properties at cryogenic temperatures. Sharpy V-notch impact test data[6,8] on 304 stainless steel indicates a slightly lowered toughness from room temperature to –196°C (150 to 124 ft-lb). For 316, the toughness lowered 13% from 141 to 122 ft-lb.

The table below summarizes the fracture toughness calculations in Appendix C.

	K_{Ic} (psi in^1/2)	K_I (psi in^1/2)	a_{cr} surface flaw (in)	a_{cr} sub-surface flaw (in)	2c length of surface flaw (in)	2c length of sub-surface flaw (in)
Main vessel	136740	10115	77.3	93.6	309.3	374.2
Ellipsoidal head	136740	13824	42.2	51.1	168.9	204.4
Flat head	136740	6528	183.1	221.6	732.5	886.3

The Unbrako bolts recommended above in the Head / Flange Calculations section are rated at their maximum tensile strength at –400°F. The alternative, 304 stainless steel fasteners have the same safe fracture critical properties as the vessel. No fracture critical calculations were performed for fasteners.

A proof test at 1.5xMAWP and at the working cryogenic temperature is planned for this vessel. Proof testing is the crux of pressure vessel qualification and is best stated from literature[5] as follows:

"The critical flaw size associated with proof test conditions can also be used for life expectance considerations. Specifically, if a pressure vessel survives a given proof test it can be concluded that the largest defect present in the structure is

New Technologies Engineering Division

Mechanical Engineering Safety Note

Time Projection Chamber

MESN99-020-OA

April 26, 1999

Prepared By: _____
Douglas Dobie, Mechanical Engineer, Pressure Consultant

Reviewed By: _____
Robert Patterson, Engineer Technical Associate

Reviewed By: _____
Terry Alger, Mechanical Engineer

Approved By: _____
Satish Kulkarni, NTED Division Leader

Distribution:

T. Alger	L-045	High Pressure Lab	L-384
D. Dobie	L-142	Eng. Records Ctr.	L-118
S. Kulkarni	L-113		
R. Patterson	L-171		
E. See	L-186		
D. Archer	L-188		

Contents

A. Description 3

B. Operational Hazards 5

C. Procedures 5

D. Calculations 5

Vessel 6

Head / Flange Calculations 7

Fracture Critical Components 11

Fragment Hazard Mitigation 12

E. Testing Requirements 13

F. Labeling Requirements 13

G. Associated Procedures 15

H. References and Notes 15

APPENDIX A: PROOF TESTING PROCEDURE FOR THE TPC 16

APPENDIX B DRAWINGS 20

APPENDIX C CALCULATIONS 33

A. Description

This safety note covers the design of time projection chambers (TPC) used in a full volume imaging detector. The chambers are used in building 132N, room 2723. There are three parts to the full volume imaging detector system. The first part is the gas purification subsystem that is used to purify and deliver electronegative free (99.9999999%) gas. This part of the system is being built commercially by Insync Systems. The second part of the system, designed and built at LLNL, includes the time projection chambers (TPC) where the experiments will be performed. Gas, from the purification panel, feeds the TPC's that will nominally operate at 300 psig but are being designed for 350 psig maximum operating pressure (MOP). It will be necessary to work around the TPC's with radioactive sealed sources for testing and calibration; thus this is a manned operation. The third part of the system uses cylinders to reclaim the purified gas. These cylinders have been fabricated by ACME CRYOGENICS INC. and are rated by them at 3000 psig MAWP. Gas will be transferred in the TPC system by thermal cycles, using LN2 to create the temperature gradient inside the chamber via conduction through the walls of the cryogenic thimble. A certain percentage of alcohol may be used in the LN2 bath to move the temperature of the bath above 73K.

The TPC's are the experimental chambers designed at LLNL. These chambers are used for two purposes but were mechanically designed to be identical. The first chamber will be used as an ionization chamber where electron drift will be used as a measure of gas purity. The second chamber is the actual TPC itself, which is used for position sensitive readout of electron clouds and hence gamma ray imaging. Figure 1 depicts a TPC with its associated hardware. In the experimental setup, the chambers are connected together with high pressure tubing. The chambers have been designed to allow a 400 keV gamma ray to penetrate the chamber wall in well-defined places, specifically in the center of the 2 3/4 inch conflat flange and in a linear series of VCR blanks on the side of the chamber. It will be necessary to use radioactive sources in conjunction with these windows to probe the capabilities of the chamber. The 1 3/4 inch conflat flanges has been outfitted with a high voltage (20 kV) ceramic feedthrough from Ceramaseal. Many of the penetrations into the chamber and the internals of the chamber are attached to the conflat gasketed chamber head to allow easy removal from the chamber body. The chambers will be filled with a gas (Ar, Xe, along with at least one the following: CH4, CO2, and P10) using the 135psi gas purification system and then condensed by cooling the chamber using a cryogenic thimble. LN2 will envelope the outside of the thimble creating non-uniform thermal stresses along with membrane stress throughout the vessel.

This ME Safety Note is required because the TPC of the system contains compressed gas at pressures exceeding 150 psig or 100kJ of stored energy. This Safety Note covers the vessel depicted in Figure 1 up to and including the output connections. If required, a separate safety note will cover the remaining parts of full volume imaging detector system less the TCP's.

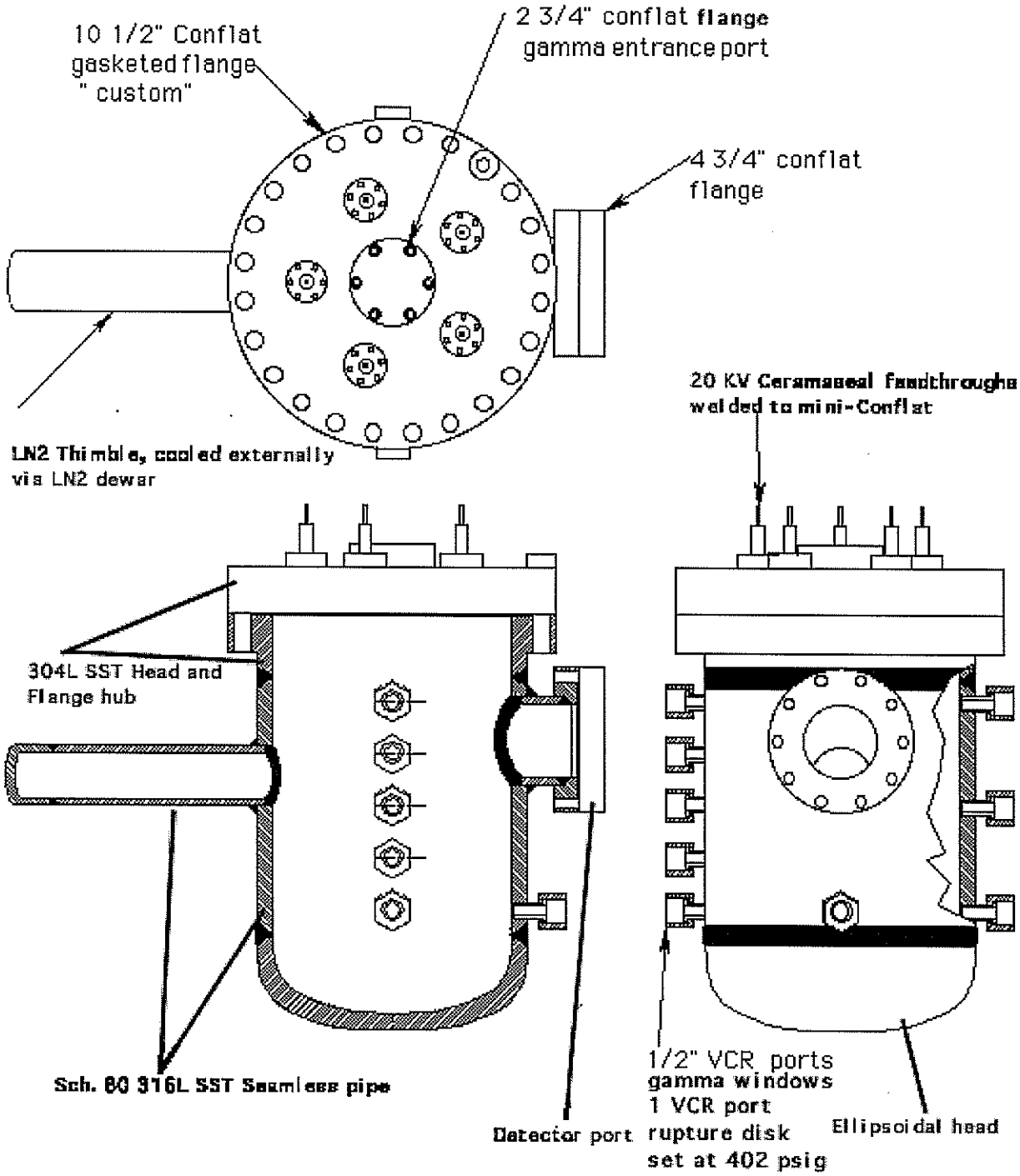

Figure 1 – Diagram of the Time Projection Chambers (TPC)

B. Operational Hazards

Associated hazards are those typical of any high pressure gas system. Failure of a vessel or component could result in either shrapnel or a blast overpressure to the body. Since the gases involved are not air, there is also the potential concern of asphyxiation. Other hazards include physical exposure to the radioactive sealed source and cold temperatures. The hazards other than those associated with the pressure vessel will be addressed by the FSP (if applicable) or separate OSP for this experiment.

C. Procedures

Design safety factors are robust for all intended pressures. The system is adequately protected by a pressure relief device at a VCR port so that components cannot be over-pressurized. This document also specifies shielding requirements for personnel protection from shrapnel in the event of an accident. However, an OSP for this experiment will address associated interlocks and operational steps required during pressurization.

D. Calculations

The following will certify the TPC for this system:

[1] Hardware and Fabrication
The vessel is fabricated using commercially purchased metals. Fabrication and joining techniques are also standard technology. Welding was performed by LLNL ASME certified welders experienced in pressure systems.

[2] Engineered Design
The system design has relief devices at strategic locations (a VCR fitting) to insure that the MAWP's are never exceeded.

An evaluation of high risk pressure components indicated that a Ceramaseal feed-through may fail if improperly handled. Specifically, the weld joint at the Conflat is susceptible to bending and fracture. To minimize this risk, a fragment deflector/stop fixture was designed and will be mounted in front of the head where the Ceramaseal is mounted. A Kevlar drape will also be employed if this device fails to capture all fragments. This stop and Kevlar drape will be interlocked during pressure vessel operation.

[3] Testing
Detailed proof testing procedures at 1.5 times MAWP and at the working temperature, induced by LN2 cooling, have been developed and are enclosed as Appendix A. Successful completion of these procedures by a LLNL pressure inspector will complete the certification of the TPC's. Proof testing is the crux of pressure vessel qualification for fracture critical components and is best stated from literature[5] as follows:

"The critical flaw size associated with proof test conditions can also be used for life expectance considerations. Specifically, if a pressure vessel survives a given proof test it can be concluded that the largest defect present in the structure is smaller than the critical flaw size at the proof test conditions. Therefore, in the absence of non-destructive inspection, this flaw size can be considered the existing flaw size at the beginning of life at the operating conditions and would, in turn, serve as the basis for further crack growth consideration"[5] (also see fracture analysis below).

The vessel has been designed to meet ASME Boiler and Pressure Vessel Code design guidelines. Stresses are low enough to eliminate the need for impact testing of the material in the heat effected zones created by the butt welds, UHA-51 (g) (see misc.nb calculations in Appendix C). The ASME Code also exempt austenitic, chromium-nickel stainless steels from impact testing, UHA-51(d)(1)(a). Thus, the base materials 304L and 316L are exempt.

[4] Calculations

Most calculations were done using ASME Pressure Vessel Code, Section VIII, Division 1 guidelines. The TPC has a MAWP of 978 psig when using the C-Ring type head (no openings) and 402 psig for the Conflat type head(s) (with and without openings). A future addendum to this safety note will cover a head (with openings) to be used at 978 psig MAWP. The allowable stresses used in all calculations are based on values found in the ASME Pressure Vessel Code, Section II. *For both 316L and 304L the allowable stress is 16,700 psi which provides a* ***nominal Safety Factor of ~5*** *in all Pressure Vessel Code calculations (i.e., head thickness, maximum vessel pressure, minimum wall thickness, etc).* The following tables are summaries of the detailed calculations found in Appendix A.

Vessel

The energy in each pressure vessel was calculated to be 55, 852 ft-lb. or 16.4 g TNT at the MAWP of 978 psig. The following table summarizes the analytical results for the main 8 inch schedule 80 pressure vessel, the detector pipe, the VCR "Cajon" fittings/ pipes, and the LN_2 pipe connected to the main vessel. All tubing is 316L. Calculations were made at a MAWP of 978 psig. The last column refers to the ratio of yield stress (37ksi) to Von Mises stress at the test pressure of 1.5 x MAWP. Values must be greater than 1.0 for a safe proof test.

	S1 (psi)	S2 (psi)	S3 (psi)	Von Mises (psi)	Required wall thickness (in)	Actual wall thickness (in)	If $\geq$ 1.0 stress less than yield for 1.5xMAWP
Main 8" vessel	3499	7976	-978	7755	0.336	0.500	3.2
Detector pipe 2.87 OD	1839	4657	-978	4880	0.102	0.275	5.1

VCR pipe 0.5" OD	1739	4455	-978	4705	0.012	0.050	5.2
LN2 pipe 1.9" OD	1618	4214	-978	4496	0.066	0.200	5.5

Analytical results for welds, area reinforcement, and their related loads that attach the detector pipe, LN_2 pipe, and VCR pipe to the main vessel shell are detailed in the table below at a MAWP of 978 psig. Generally, if the nozzle and fillet weld load paths are greater than the total weld load, then the strengths are sufficient. The total weld load (W~(Area required – Area available)*Allowable stress)) for the VCR pipe is less than 0 because the vessel wall is 0.160" thicker than required creating much more area available than required. Thus, the area available is greater than the area removed and a negative number results.

	Area of mat'l. required (in^2)	Area of mat'l. avail. (in^2)	Total weld load (lb)	Nozzle wall load path (lb)	Fillet weld load path (lb)
Detector pipe	0.780	0.800	8172	13172	12749
LN_2 pipe	0.504	0.508	5396	6243	6106
VCR pipe	0.134	0.194	< 0	413	402

The butt welds connecting the hub to the main vessel and the ellipsiodal head to the main vessel, the ellipsiodal head on liquid nitrogen pipe, and the hub to the detector pipe, reduced the allowable working pressure in the vessel they are connected to by 'E' (butt weld efficiency). An 'E' of 0.7 was used for these welds which reduced their associated allowable working pressures to 1421 psig, 6979 psig, and 6139 psig for the of the main vessel, LN pipe, and detector pipe respectively. Again, all of these calculated pressures use an allowable stress of 16,700 psi which has a nominal SF = 5.0 so an additional SF of 1.5 (1421 / 978) is obtained. Using a butt weld efficiency of 0.7 allows no radiography to be performed on the welds according to the ASME Boiler and Pressure Codes.

The VCR, LN_2, and detector port openings in the vessel shell are mounted 90° to each other. The radial distance between hole centers is approximately 6.0 inches. ASME Boiler Code requires that all openings be less than the sum of their respective diameters. The maximum sum of the diameters is 3.37 inches between LN_2 and the detector port.

Holes that do not penetrate the vessel shell may be required to horizontally mount the vessel. The depth of tapped 1/4-20 holes and 3/8-16 holes shall be ≤ 0.25 inches. Holes can not be placed near other openings or reinforcements.

Head / Flange Calculations

The following table summarizes the analytical results for the integral flange butt welded to the main access port and the small flange butt welded on the side of the

vessel (detector port). Again, the allowable stress in 16,700 psi for the base material. Also, the ASME allowable hub stress is 1.5 time the allowable stress.

Flange	MOP	Longitudinal hub stress (psi)	Radial flange stress (psi)	Tangential flange stress (psi)
Main 10.5" OD	850	16973	6327	4173
Main 10.5" OD	350	6388	2381	1571
Detector 4.625" OD	850	13998	2794	7367

The head for operating at 850 psig, uses a C-Ring type metal seal and is made from 304L stainless steel. The (24) required bolts for this flange are Unbrako KS 1216 1/2"-13 SHCS with a tensile strength of 160,000 psi (or 304 Stainless Steel with a 81 ksi tensile strength). The main flange for operating at 350 psig is a Conflat (CF) type (304L), sealed with a soft copper flat gasket to a knife edge. The (24) required bolts for this flange are Unbrako KS 1216 1/2"-13 SHCS with a tensile strength of 160,000 psi (or 304 Stainless Steel with a 81 ksi tensile strength). All other CF flanges (1 1/3 and 2 3/4 inch) shall be bolted to the 350 MOP head using Unbrako KS 1216 psi (or 304 Stainless Steel with a 81 ksi tensile strength), 8-32 or 1/4-28 SHCS as required.

The smaller 4 5/8" CF type flange for the detector port requires 10 bolts, Unbrako KS 1216 5/16"-24 SHCS with a tensile strength of 160,000 psi (or 304 Stainless Steel with a 81 ksi tensile strength) and is made from 304L stainless steel. The following table summarizes the fastener calculations.

Flange	MOP	No. of bolts	Bolt	Torque (in-lb)	Flange design bolt load, operating. (lb)	Flange design bolt load, gasket seal. (lb)	Max. allowable bolt load (SF 4 applied)
Main, C-ring 10.5" OD	850	24	1/2-13	1140	58850	96913	134976
Main, CF 10.5" OD	350	24	1/2-13	1140	24677	79827	134976
Detector 4.625" OD	850	10	5/16-24	347	10144	15452	20760
1 1/3" CF	350	6	#8-32	51	231	230	2936
2 3/4" CF	350	6	1/4-28	152	1015	527	7937

Analytical results for the commercially purchased SA316 ellipsiodal head on main vessel, nominal wall thickness 0.5 inches and the SA316 ellipsiodal head on liquid nitrogen pipe, nominal wall thickness 0.2 inches follows. The head

thickness calculations were done at the MAWP of 978 psig and allow for strength reduction due to the butt weld connecting them to the vessel.

	MOP	Max. pressure (psig)	Required head thickness (in)	Actual head thickness (in)	If ≥ 1.0 stress less than yield for 1.5x MAWP
Main vessel	850	1513	0.320	0.500	1.03
LN_2 pipe	850	3036	0.063	0.200	2.07

Results of the unstayed flat heads are presented in the table below. Two head types are planned for the main vessel, one CF type for low pressures at 350 MOP that has instrumentation ports, and one C-Ring type for high pressure (850 MOP) for vessel pressure testing and to be modified for a future head design (and subsequently proof tested along with a Safety Note Addendum). Stress concentration factors for the circular holes in a plate with internal pressure were used from empirical data in Wiley[2]. Although not a perfectly matching model to Wiley, the concentration factors used are conservative. The stress concentration factor (2.278) reduced the allowable stress to 7,331 psi from 16,700 psi. Hole reinforcement requirements were also calculated using the ASME Codes. These results confirmed the thickness requirements using Wiley stress concentration factors.

Results of two types of Conflat feedthrough heads mounted to the 10.5 inch CF flange are also presented below. All head thickness calculations use the ASME head equation involving bending with the exception of the 2 3/4 inch CF where both bending and no bending cases were used. This flange was bored out to leave a head depth of 0.125" by 1.5" in diameter. The flange thickness around its mounting holes and under its knife edge remains at the nominal flange thickness of 0.5 inches. Thus, calculations were made for both and summarized below. A minimum thickness for the 1/2 inch VCR plug is calculated. The pressure side of a VCR plug is bored out 1/4 inch in diameter to this minimum thickness to be used as a gamma port.

Flange type	MOP	Required head thickness (in)	Actual head thickness (in)	Required hub thickness (in)	Actual hub thickness (in)
Conflat flange, Cu seal AAA99-104240	350	1.261	1.5	0.624	1.250
C-Ring type metal seal. AAA99-104243	850	1.247	1.980	0.661	1.250
Conflat flange, 4 5/8" Ø, x 0.750" thick. Commercial product	850	0.613	0.750	0.423	0.810

1 1/3" CF	350	0.100	0.300	N/A	N/A
2 3/4" CF	350	0.178 / 0.092	0.5 / 0.125	N/A	N/A
VCR plug	850	0.052	0.052	N/A	N/A

Blind holes in the unstayed flat head were analyzed on the basis of area replacement. If the actual cross-sectional area available was greater than the cross-sectional area required, reinforcement was not required. The following table summarizes the results for the 350 MOP flat head. These calculations can also apply to blind mounting holes of the same dimension for mounting and handling the head with the caveat that hole can not be placed near other openings or reinforcements.

Hole type:	Area available (in^2)	Area required (in^2)
8-32 mini conflat holes	0.195	0.051
8-32 mounting bracket holes (internal)	0.205	0.041
1/4-28 medium conflat holes	0.250	0.125

Conflat (CF) flanges are used as connecting members and instrumentation feedthroughs in this pressure vessel design. Five 1 1/3 inch on a 5.5 inch bolt circle pattern and one 2 3/4 inch centrally located CF flanges are used on the 350 MOP head. A 4 5/8 inch CF flange is used on the detector port (850 MOP).

CF flanges were pressure tested in 1992 under the safety note END 92-072. The 1 1/3 inch nominally sized CF flanges with stainless steel bolts started leaking at ~15,000 psi. The 4 5/8 inch CF flange had no leakage with water as the pressure medium up to 1200 psi and minor (10^{-6} Torr-L/s) leaking with helium from 500 psi to 930 psi. All tests were done <u>without</u> catastrophic failure. Leakage occurred around the copper seal. A blank 2 3/4 inch was not proof tested.

For operation, the mating 1 1/3 inch CF flange to the CF port on the 350 MOP head has a high voltage feedthrough that is not rated by the manufacturer (Ceramaseal) because it is a special order. The manufacturer welded the high voltage feedthrough to an opening in the flange. LLNL has proof tested this component to burst (5850 psi). There is a concern for brittle fracture or weld failure due to cracking by mishandling that is addressed in the Fragment Hazard Mitigation paragraph below. The mating 2 3/4 inch CF flange will be proof tested at 604 psig along with the rest of the head. The mating 4 5/8 inch CF flange will be blanked off for pressure testing and initial operational tests. An addendum to this note will follow at a later date to address the attachment method of the detector to the mating flange. It will then be proof tested at 1467 psig.

Fracture Critical Components

This vessel is considered a Category IV risk according to MEDSS. Its failure has the potential for moderate injury and material testing is recommended.

The material used in this vessel is standard ASTM 304L and 316L stainless steel. Material testing was not done for the following reasons:

(1) SA316L and SA304L are standard materials with strict manufacturing requirements.
(2) ASME Boiler and Pressure Vessel Code does not require testing for austenitic stainless steels.
(3) the large critical crack depths (a_{cr}) and lengths calculated using conservative stress intensity factors (K_{Ic}) from literature.
(4) the number of cycles to failure were > 10^5; far larger than the ≤ 10^2 cycles expected using crack growth rates[7] from literature.
(5) The leak-before-break criterion is satisfied by a factor of ~10 or greater (136740 / 13824). Also, the CF type flanges used in the TPC design practically guarantee a leak before failure as demonstrated by earlier proof testing.
(6) 316 and 304 stainless steel both have excellent toughness properties at cryogenic temperatures. Sharpy V-notch impact test data[6,8] on 304 stainless steel indicates a slightly lowered toughness from room temperature to –196°C (150 to 124 ft-lb). For 316, the toughness lowered 13% from 141 to 122 ft-lb.

The table below summarizes the fracture toughness calculations in Appendix C.

	K_{Ic} (psi in^1/2)	K_I (psi in^1/2)	a_{cr} surface flaw (in)	a_{cr} sub-surface flaw (in)	2c length of surface flaw (in)	2c length of sub-surface flaw (in)
Main vessel	136740	10115	77.3	93.6	309.3	374.2
Ellipsoidal head	136740	13824	42.2	51.1	168.9	204.4
Flat head	136740	6528	183.1	221.6	732.5	886.3

The Unbrako bolts recommended above in the Head / Flange Calculations section are rated at their maximum tensile strength at –400°F. The alternative, 304 stainless steel fasteners have the same safe fracture critical properties as the vessel. No fracture critical calculations were performed for fasteners.

A proof test at 1.5xMAWP and at the working cryogenic temperature is planned for this vessel. Proof testing is the crux of pressure vessel qualification and is best stated from literature[5] as follows:

"The critical flaw size associated with proof test conditions can also be used for life expectance considerations. Specifically, if a pressure vessel survives a given proof test it can be concluded that the largest defect present in the structure is

smaller than the critical flaw size at the proof test conditions. Therefore, in the absence of non-destructive inspection, this flaw size can be considered the existing flaw size at the beginning of life at the operating conditions and would, in turn, serve as the basis for further crack growth consideration".

A physical inspection of the TPC for cracks is required between every experiment or experimental cycle. Careful handling of the head, vessel and its related hardware is important so that the welds attaching the various components (high voltage feedthroughs, VCR stubs) are not damaged. If any of these components are bent by mishandling, the suspect welds must be radiographicly inspected and re-proof tested.

Fragment Hazard Mitigation

A fragment deflector/stop was designed to deflect and capture a potential Ceramaseal feedthrough mishap if it were propelled from head of the vessel. It will be placed as close as practical to the TPC head and still allow operation of the vessel. The basic design is based on ballistic gun range technology where the fragment is deflected from a 45° wall into a sand trap (red arrow shows path in Figure below). All walls are made from 2.5" thick lexan that can stop the projectile if it were propelled normal into it. The opening in the stop (11" x 14") is sufficiently oversized to the Ceramaseal bolt circle diameter (5.5") and the sand trap baffle is made from 1/4" lexan to allow fragment passage. This stop will be interlocked during vessel operation. Calculation filename "fragmant.nb" in Appendix C details the shielding calculations obtained from MEDSS.

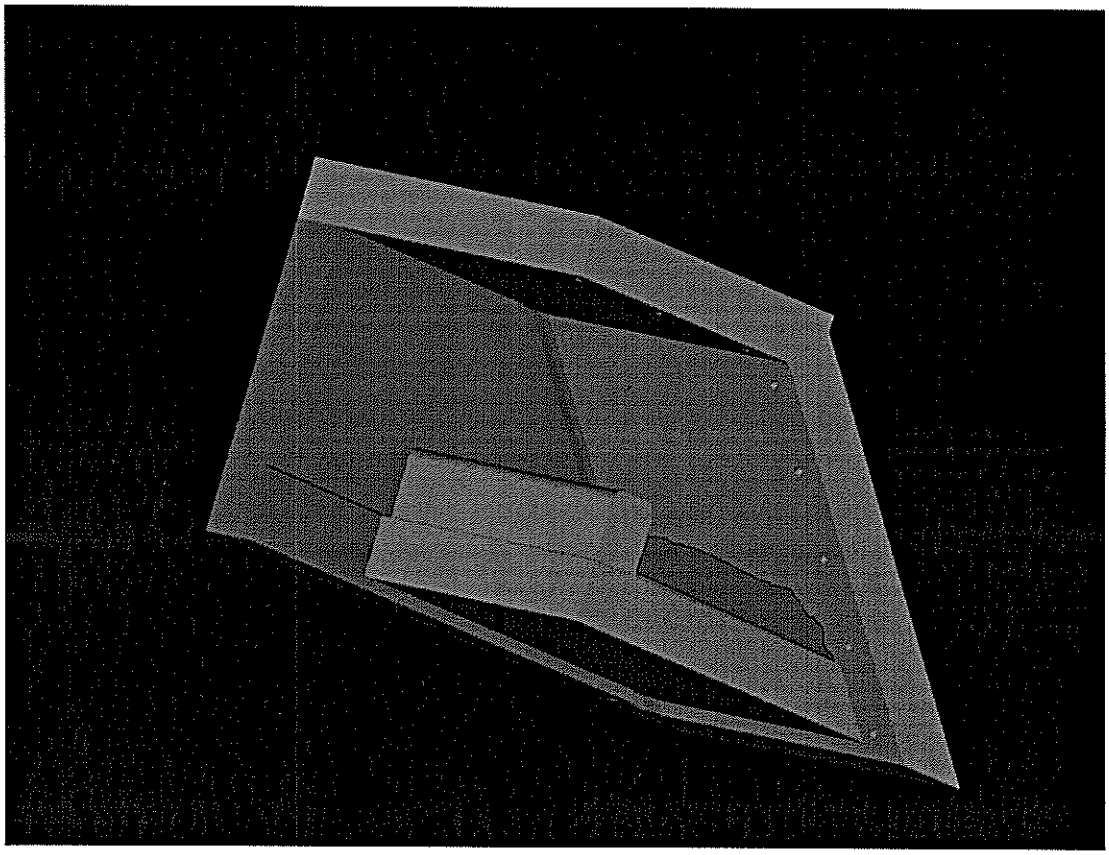

A Kevlar drape will also be employed to shield the operator from a potential stray fragment reflected back out of the catch.

The system pressure requirements are summarized as follows:

Component	Maximum Operating Pressure (psig)	Maximum Allowable Working Pressure (MAWP) (psig)	Pressure Relief Setting (psig)	Proof Test Pressure (psig)
Main Pressure Vessel (sketch) AAA99-104242 (weld flange)	850	978	978	1467
Flat Head, Metal C-Ring: AAA99-104243	850	978	978	1467
Conlfat flange, 4 5/8" Ø, x 0.750" thick. commercial CF flange (blank)	850	978	978	1467
VCR Plug, 1/2" Ø, modified commercial	850	978	978	1467
Flat Head Conflat Type: AAA99-104240	350	402	402	604
Conlfat flange, 2 3/4" Ø, x 0.500" thick. modified commercial CF flange	350	402	402	604
Ceramaseal: 19543-04-CF; 1 1/3" Ø, x 0.300" thick. modified commercial CF flange	350	402	402	604

E. Testing Requirements

Detailed testing procedures have been developed and are enclosed as Appendices B. The proof test criterion for each system is 150% of MAWP.

F. Labeling Requirements

Upon completion of the testing procedures, the LLNL pressure inspector will certify the inspection of this system by completion of an LLNL Pressure Test/Inspection Record, Form LL3586, and by attaching an LLNL Pressure Tested Label, properly filled out to the individual components identified below. Appropriate additional information will be inserted as required.

LLNL PRESSURE TESTED
FOR MANNED AREA

ASSY. Pressure vessel
SAFETY NOTE MESN99-020-OA
M.A.W.P 978 PSIG.
FLUID He, Xe, Ar, CH4, CO2, P10
TEMP. -320 TO ambient °F
REMARKS Main Pressure Vessel (AAA99-104242, weld flanges)
TEST NO. T.R.
EXPIRATION DATE
BY DATE

LLNL PRESSURE TESTED
FOR MANNED AREA

ASSY. AAA98-104240
SAFETY NOTE MESN99-020-OA
M.A.W.P 402 PSIG.
FLUID He, Xe, Ar, CH4, CO2, P10
TEMP. -320 TO ambient °F
REMARKS 350 MOP CF type head
TEST NO. T.R.
EXPIRATION DATE
BY DATE

LLNL PRESSURE TESTED
FOR MANNED AREA

ASSY. AAA99-104243-00
SAFETY NOTE MESN99-020-OA
M.A.W.P 978 PSIG.
FLUID He, Xe, Ar, CH4, CO2, P10
TEMP. -320 TO ambient °F
REMARKS 850 MOP C-Ring Head
TEST NO. T.R.
EXPIRATION DATE
BY DATE

LLNL PRESSURE TESTED
FOR MANNED AREA

ASSY. AAA99-104241-00
SAFETY NOTE MESN99-020-OA
M.A.W.P 402 PSIG.
FLUID He, Xe, Ar, CH4, CO2, P10
TEMP. -320 TO ambient °F
REMARKS 350 MOP CF Type Head
TEST NO. T.R.
EXPIRATION DATE
BY DATE

G. Associated Procedures

The concerns are asphyxiation, cold temperature and radiation exposure of personnel. Responsibility for an OSP resides with the user.

H. References and Notes

1. The defining drawings are as follows:

Drawing Title	LLNL
Pressure Chamber Lid Blank	AAA98-1104241
Pressure Chamber Lid	AAA98-1104240
Pressure Chamber Lid Blank C Ring 850 MOP	AAA98-1104243
Pressure Chamber Weld Flange 850 MOP	AAA98-1104242
Xenon Chamber Model 8" (sketch)	N/A
Xenon Chamber Model 8" associated sketches	N/A

2. 1995 ASME Boiler and Pressure Vessel Code, Section VIII, Division I.

3. Design of Piping Systems, John Wiley & Sons, Inc. 1974.

4. Degraded Piping Program - Phase II, Sixth Program Report, Oct. 1986 – September 1987, USNRC

5. Fracture 1969, Chapman and Hall Ltd. IBN 412094703

6. Handbook of Stainless Steels, D. Peckner, I. Bernstein, McGraw-Hill, 1977

7. Metal Fatigure in Engineering, H. Fuchs, R. Stephens, John Wiley & Sons, Inc. 1980.

8. Austenetic Steels at Low Temperatures, R.P. Reed, T Horiuchi, Plenum Press, 1982.

APPENDIX A: PROOF

TESTING PROCEDURE FOR

THE TPC

A.1 General

This procedure is for proof testing the TPC shown in Figure 1. Initial pressure and leak tests of the system will be conducted in Building 343 because it provides an adequate barricade for conducting the test and keeps personnel exposure to a minimum. Final leak testing of joints made up after installation and retest of the systems in the future will be conducted at the B132 facility.

A.2 Hazards

The Health and Safety Manual Supplement 32.05, Section 2 – "Standard Procedure for Pressure Testing with Gas" applies.

A.3 Pretest Procedure

Use the system indicated in Figure A1 as the test source. Support the chamber horizontally. Cool the chambers' LN2 pipe and surrounding metal with an LN2 filled dewar supplied by the experimenter to simulate the thermal stresses during actual operation. Let the metal 'soak' for 20-30 minutes before proof testing.

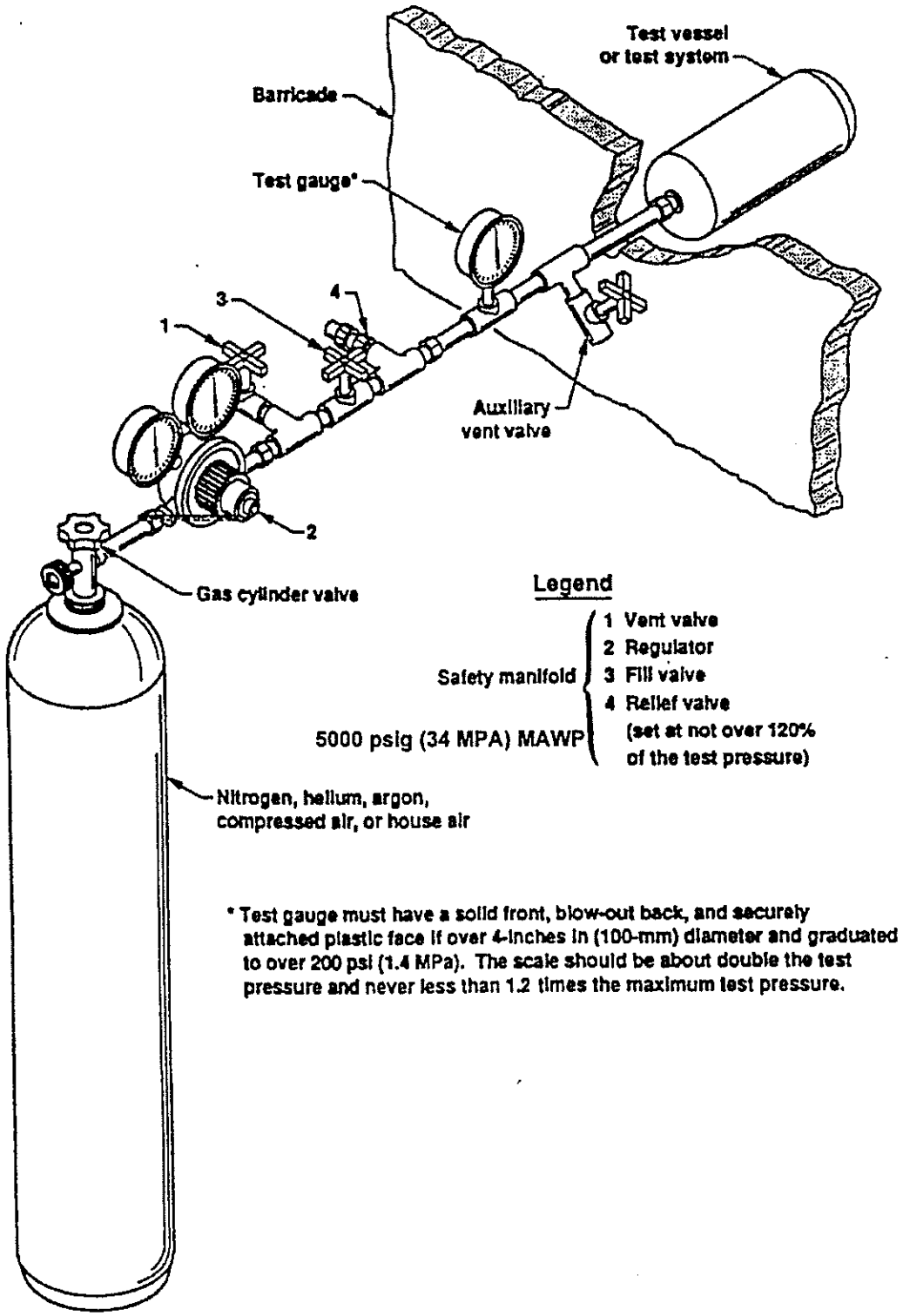

Figure A1 – Gas Test System

A.4 Test Procedure

Refer to Figure 1 and Appendix A for component designations.

A.4.1 High Pressure (1467 psig) Helium System Pressure Test

The two TPC's will first be tested to 1.5 x MAWP, or 1.5 x 978 = 1467 psig using the following components:

Vessel (2 ea., requires 2 separate proof tests)
C-Ring type lid (AAA99-104243)
4 3/4" CF blank for the detector port
Modified VCR plug(s) at the VCR ports

1. Install the hardware described above for the 1467psig proof test.
2. Apply 1467psig test pressure to one of the VCR ports.
3. Hold test pressure at 1467psig for 15 minutes.
4. Vent system down to 150 psig and leak check all joints under pressure with Snoop.
5. Vent helium to atmospheric pressure.

A.4.2 Moderate Pressure (604 psig) Helium System Pressure Test

A single TPC will also be tested to 1.5 x MAWP, or 1.5 x 402 = 604 psig using the following components. Two tests are required to qualify both heads.

Vessel
CF type lid (AAA99-104240, AAA99-104241)
2 3/4" CF modified blank for the x-ray port
1 1/3" CF flanges with high voltage feedthroughs
4 3/4" CF blank for the detector port
Modified VCR plug at the VCR ports

1. Install the hardware described above for the 604 psig proof test.
2. Apply 604 psig test pressure to one of the VCR ports.
3. Hold test pressure at 604 psig for 15 minutes.
4. Vent system down to 150 psig and leak check all joints under pressure with Snoop.
5. Vent helium to atmospheric pressure.

A.4.3 Documentation

Test records shall include an LLNL Pressure test/inspection record for the separate pieces of the vessel. The pressure inspector will send the original copies of the test reports to LLNL Pressure Safety (L-384).

APPENDIX B

DRAWINGS

Xenon Chamber 3 view Model 8"
Date:. 2/24/99
Drawn BY: Bob Patterson
Material All Pipe sched. 80
316L SS
Ranges: conflat type 304 SS
Custom made
Pipe cap 316L
Bolts: 1/2-20 grade 8
24 each

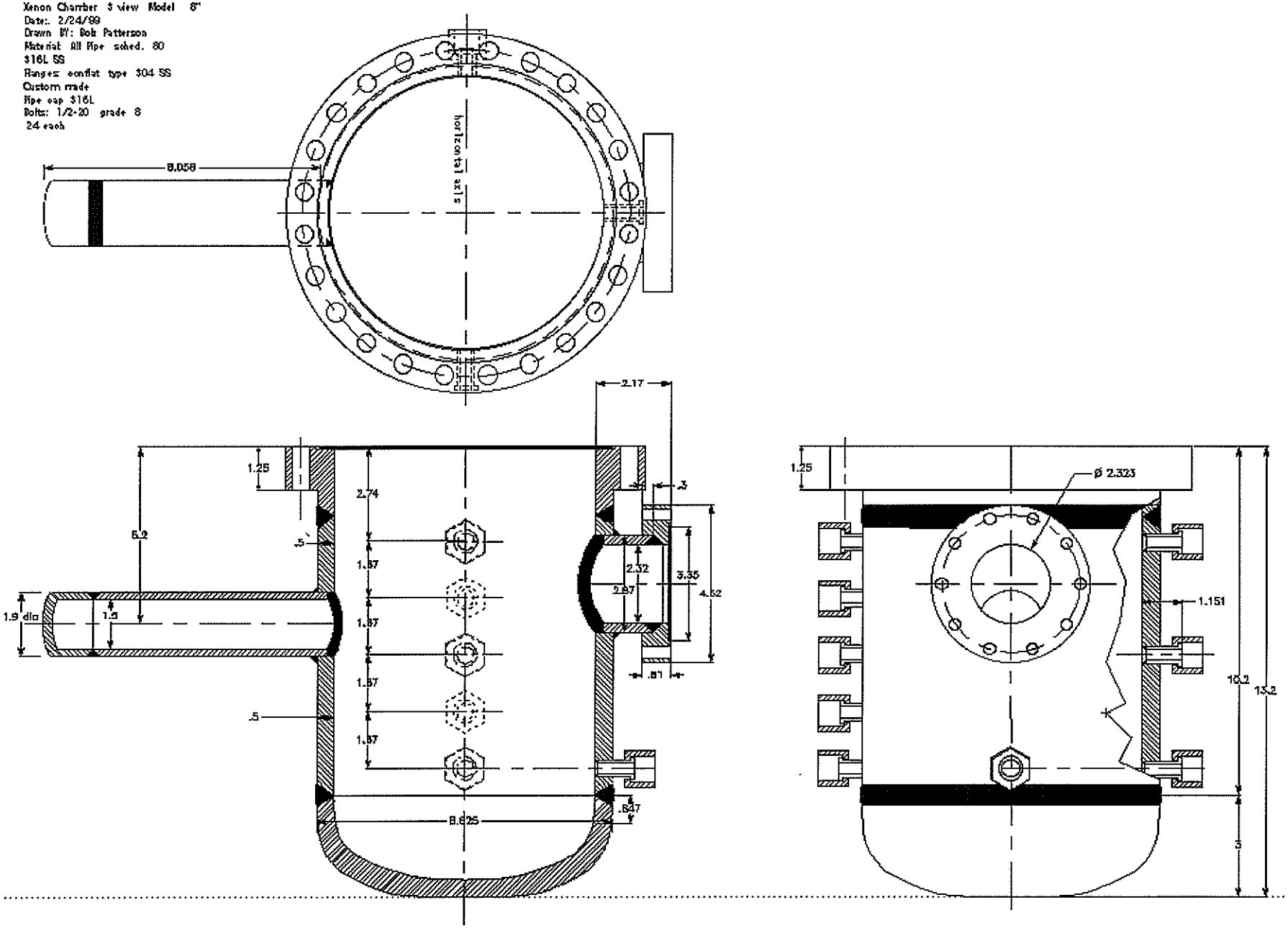

Detector Port
Date:. 2/24/99
Drawn By: Bob Patterson
Material: Pipe 2 1/2 IPS sched. 80
316L SS
2 ea. required

Flange MDC 4 5/8" OD
F458000 conflat blank or
equivalant bored to fit
2 1/2" IPS

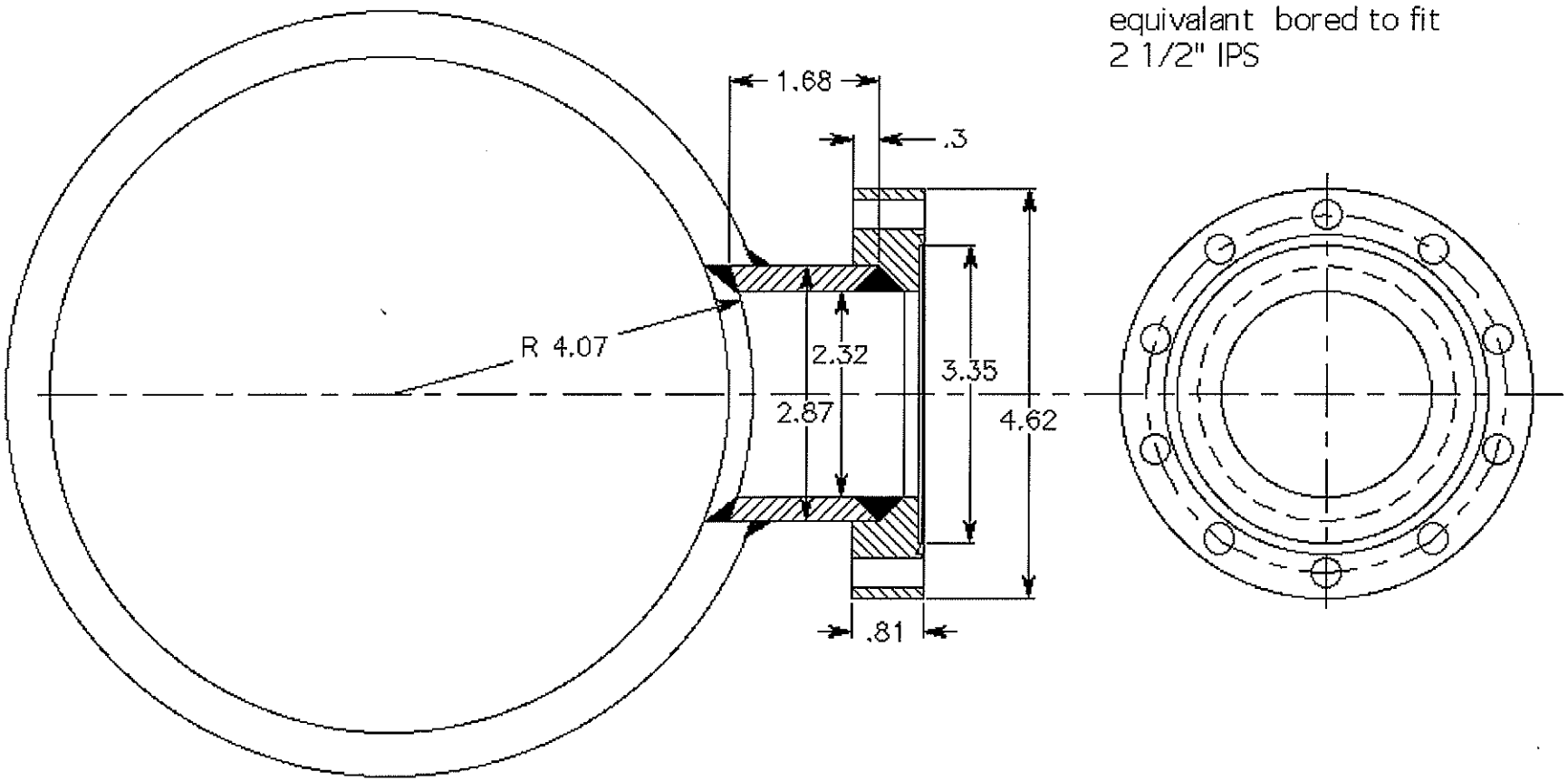

Xenon Chamber Welding Drawing
Date:. 3/3/99
Drawn BY: Bob Patterson
Material: All Pipe sched. 80
316L SS
Flanges: conflat type 304 SS
Custom made
Pipe cap 316L

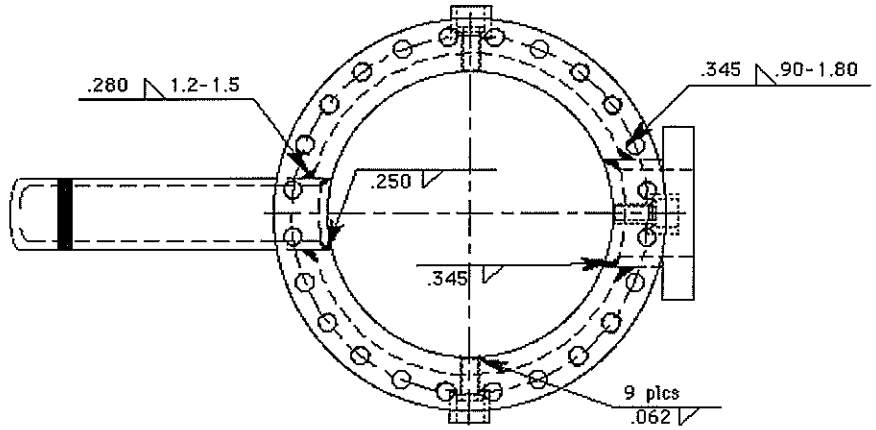

Welds must meet ASME Bolier and Pressure vessel Code, Section VIII Division 1, Part UW requirments for cleaning, heat treating and welding process.

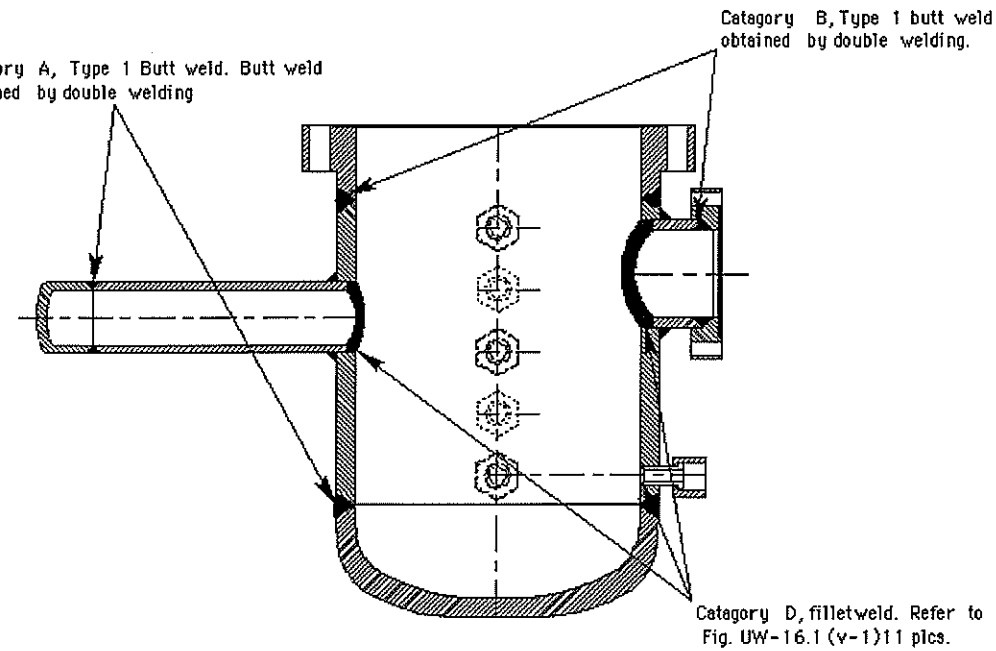

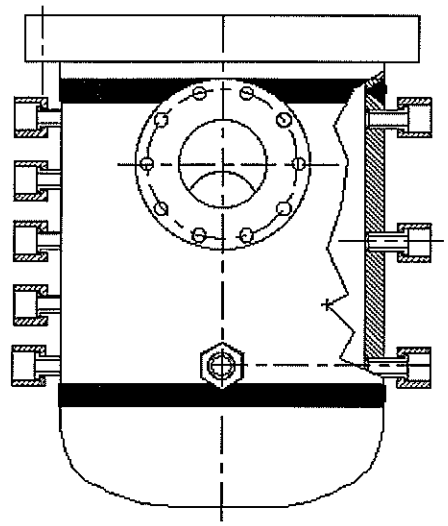

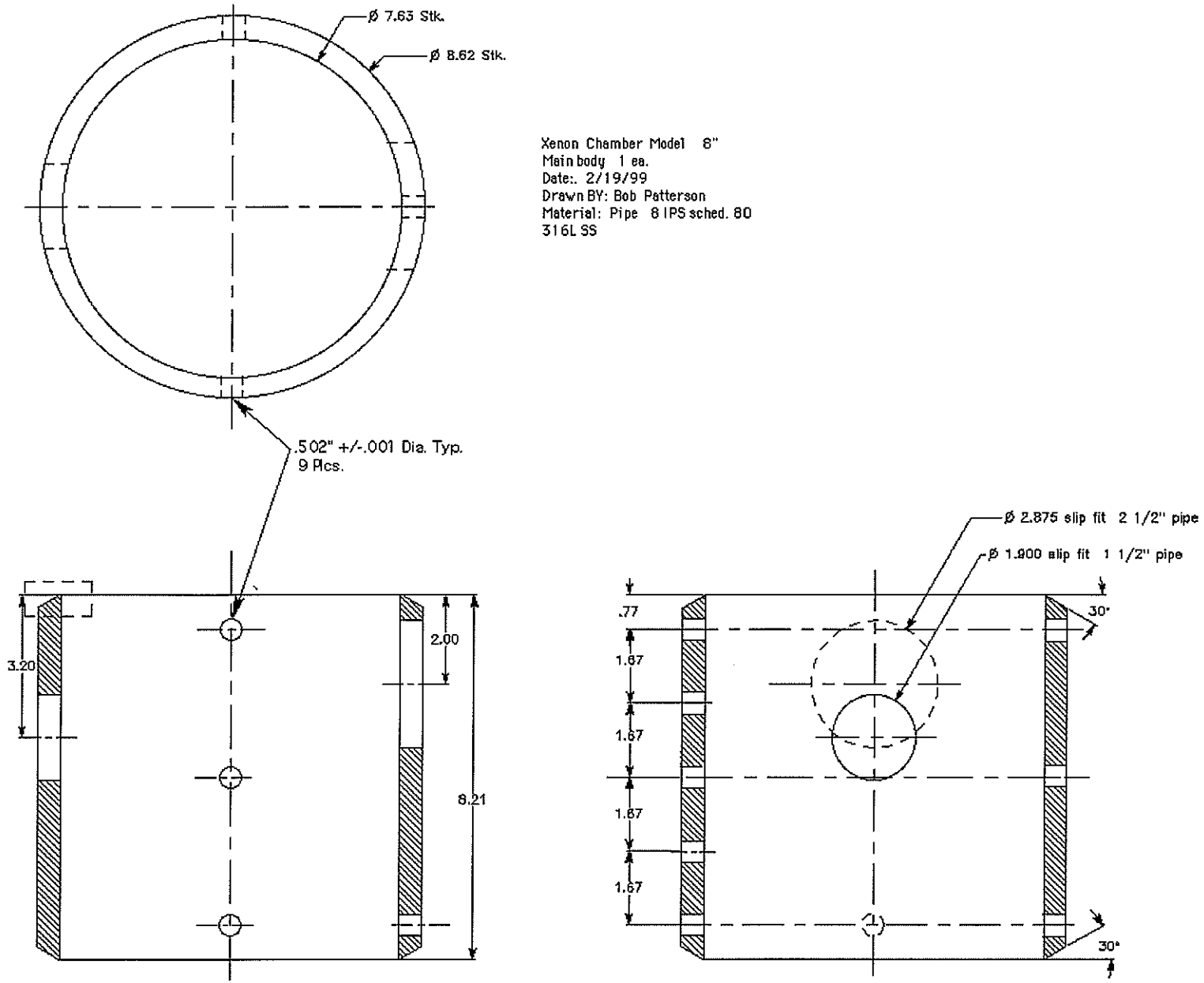
Ø 7.63 Stk.
Ø 8.62 Stk.
Xenon Chamber Model 8"
Main body 1 ea.
Date:. 2/19/99
Drawn BY: Bob Patterson
Material: Pipe 8 IPS sched. 80
316L SS
.502" +/-.001 Dia. Typ.
9 Pcs.
3.20
2.00
8.21
Ø 2.875 slip fit 2 1/2" pipe
Ø 1.900 slip fit 1 1/2" pipe
.77
1.67
1.67
1.67
1.67
30°
30°

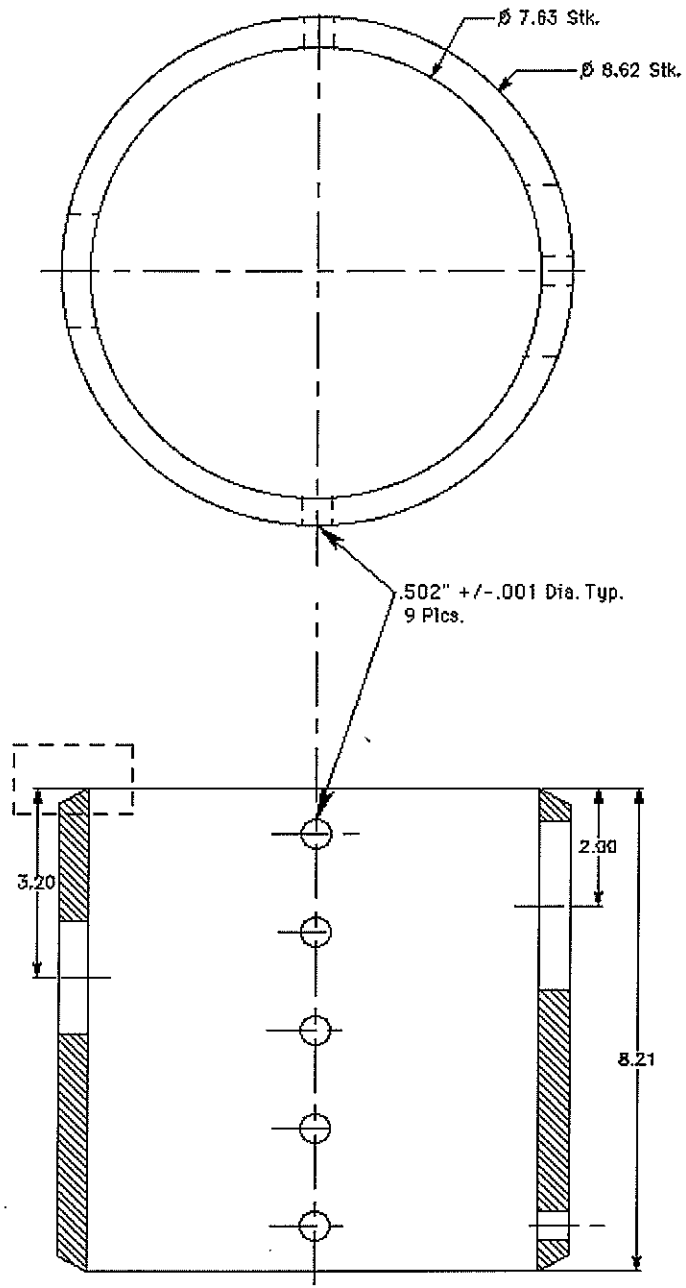

Xenon Chamber Model 8"
Mainbody Mirror Image 1ea
Date:. 2/19/99
Drawn BY: Bob Patterson
Material: Pipe 8 IPS sched. 80
316L SS

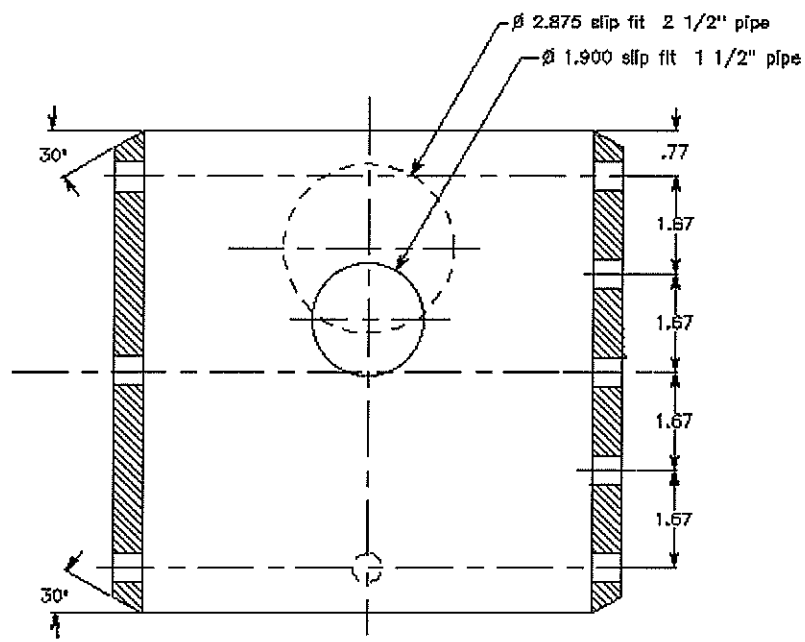

	Checked by	Date	Drawing #

Gamma window
VCR Plug Modified
P/N SS-8-VCR-P
Quantity: 12 ea
MAWP 850

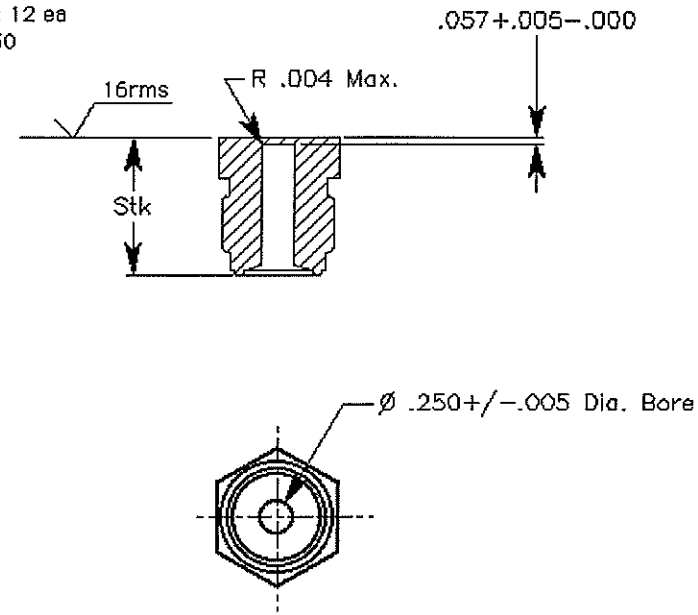

Note: Modify existingVCR Male Plug
Remachine top surface
Partssuppliedby requestor

All Dims. in inches

Date Drawn 4/23/99	Lawrence LivermoreNational Laboratory
Scale 1 to 1	Drawn by Robert Patterson Employee no 686200
Acct. No. 8960-04	Building 132 S Room 1170 L-171 Phone 422-7599

Pumping Tubulation
Date:. 2/25/99
Drawn By: Bob Patterson
Material: Pipe 1 1/2 IPS sched. 80
316L SS
2 ea. required

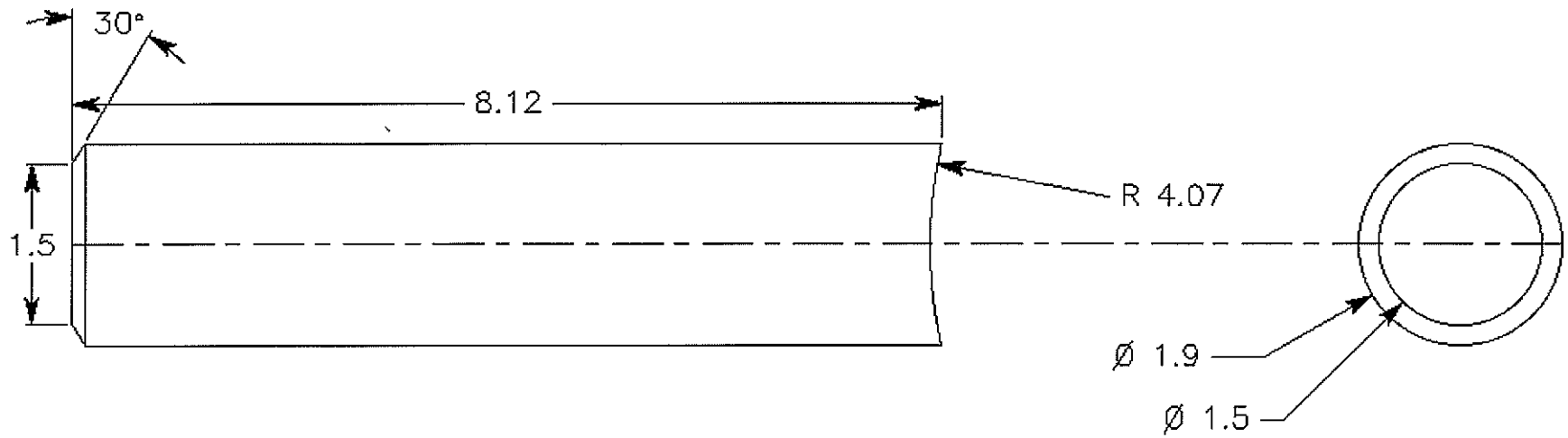

Detail A	X +/-.002	Y +/- .002
1	-----	-------
2	-----	-------
3	8.540	8.750

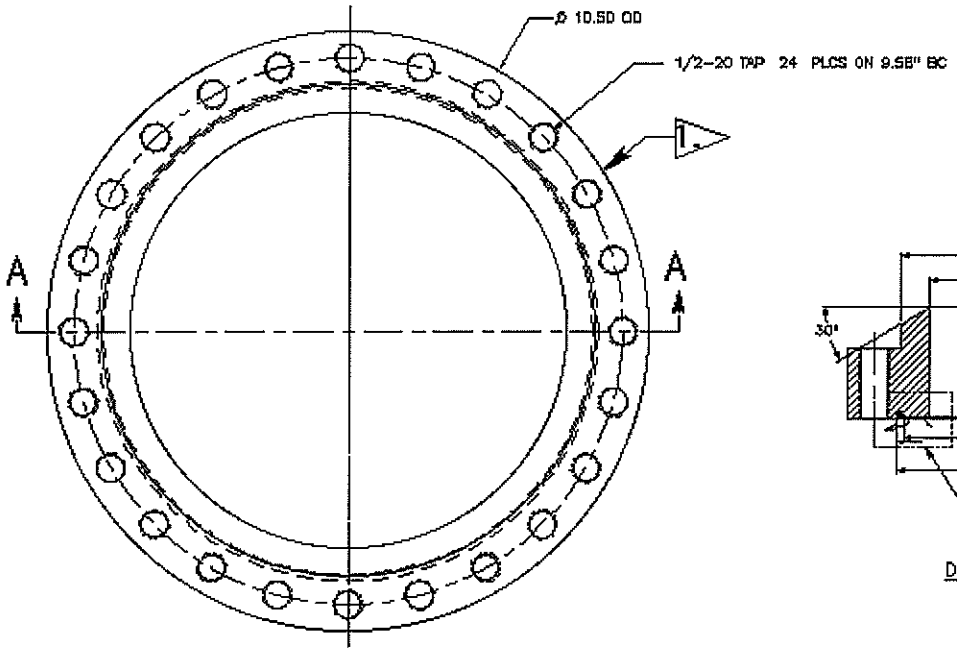

1 STAMP DRAWING NUMBER

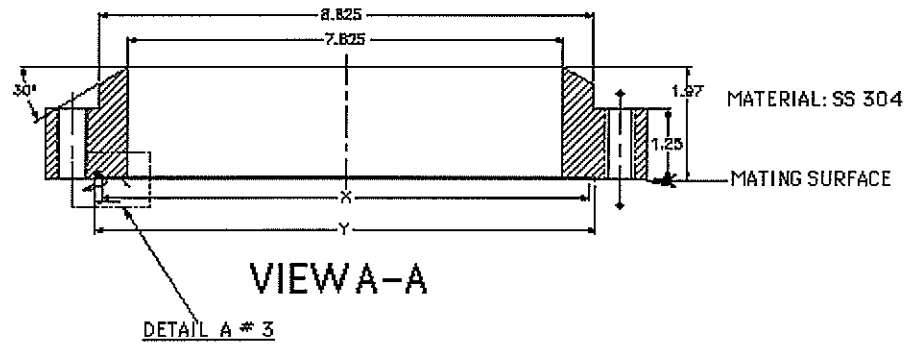

LEVEL 1 DRAWING

PressureChamber
Weld Flange 850 MOP

AAA99-104242-00

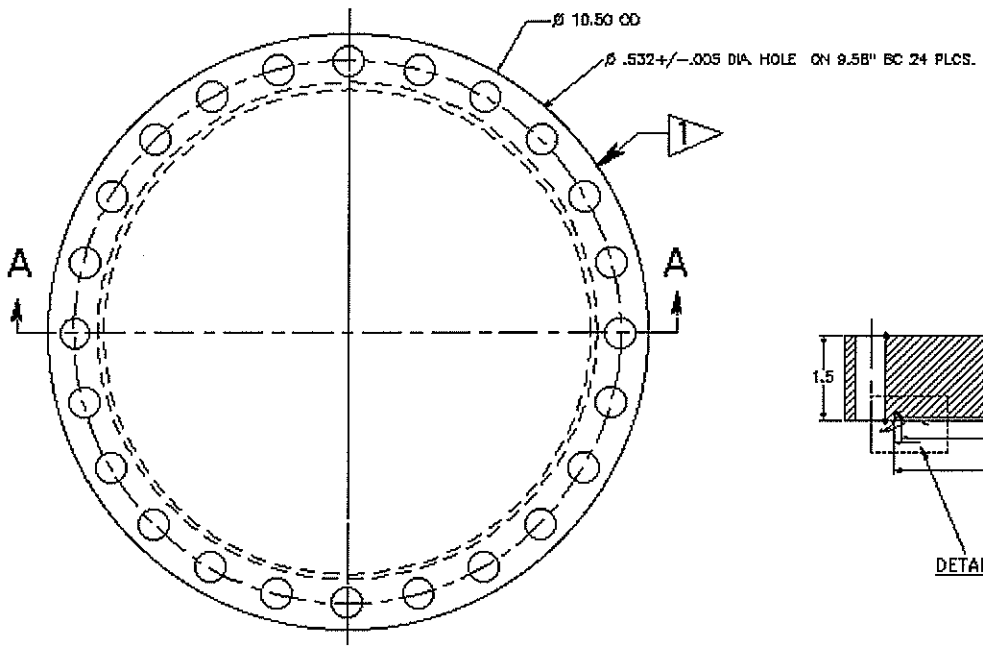

Detail A	X +/-.002	Y +/- .002
1	-----	-------
2	-----	-------
3	8.540	8.750

1 STAMP DRAWING NUMBER

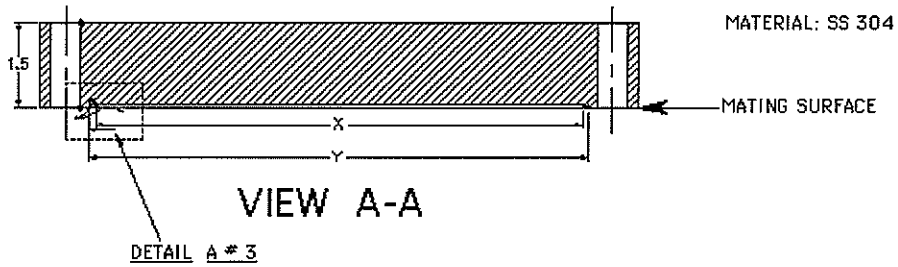

LEVEL 1 DRAWING

Pressure Chamber Lid
Blank 350 MOP

AAA99-104241-00

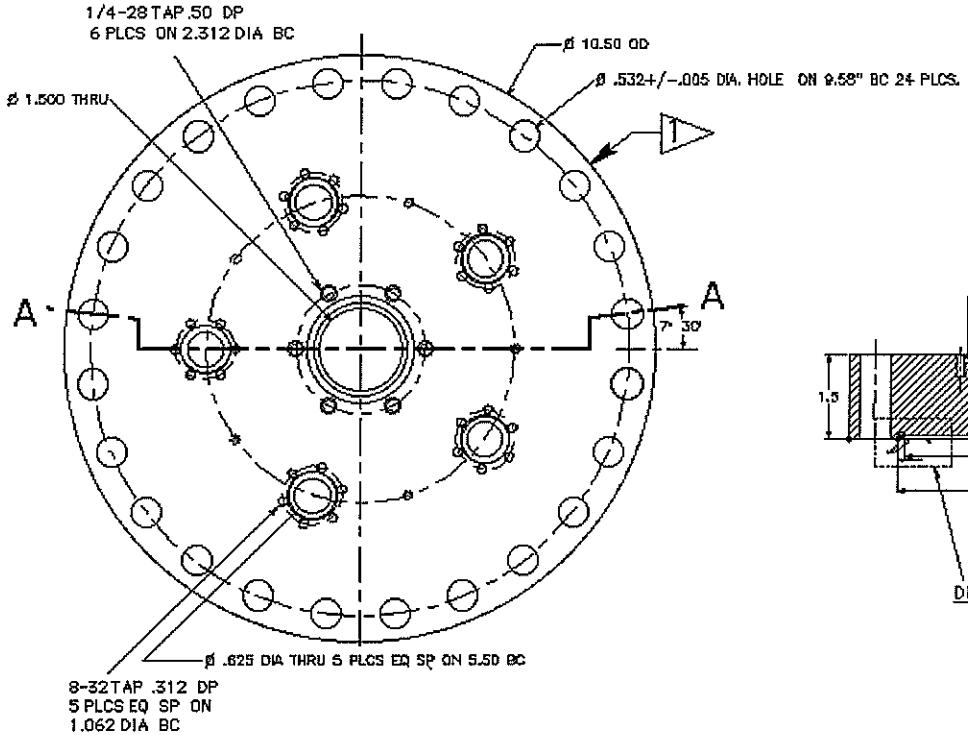

Detail A	X +/-.002	Y +/- .002
1	.720	.840
2	1.650	1.902
3	8.540	8.750

1 STAMP DRAWING NUMBER

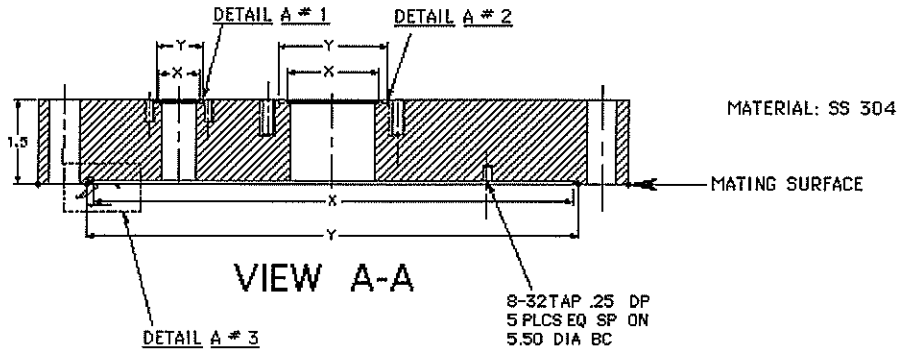

LEVEL 1 DRAWING

Pressure Chamber Lid
C F Mini 350 MOP

AAA99-104240-00

	Checked by	Date	Drawing #

Gamma Window
2 3/4" ConflatFlange
MAWP 350 psig
Quantity 2 ea.

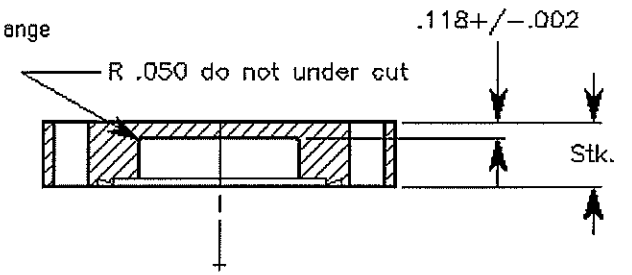

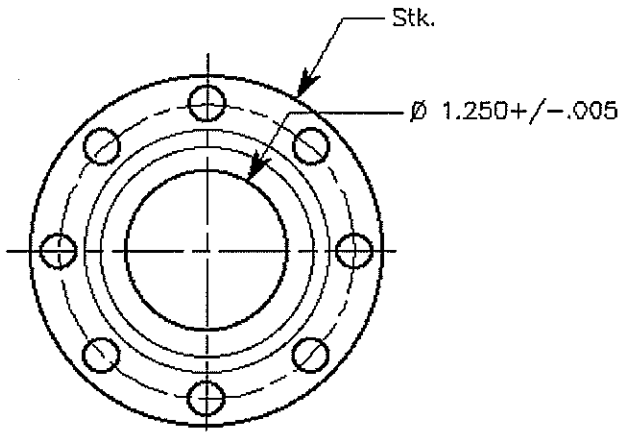

Note: Reworked Flange
304 SS

All Dims. in inches

Date Drawn:4/23/99	LawrenceLivermoreNationalLaboratory
Scale 1 to 1	Drawn by Robert Patterson Employee no 686200
Acct. No 8960-04.	Building 132 S Room 1170 L-171 Phone 422-7599

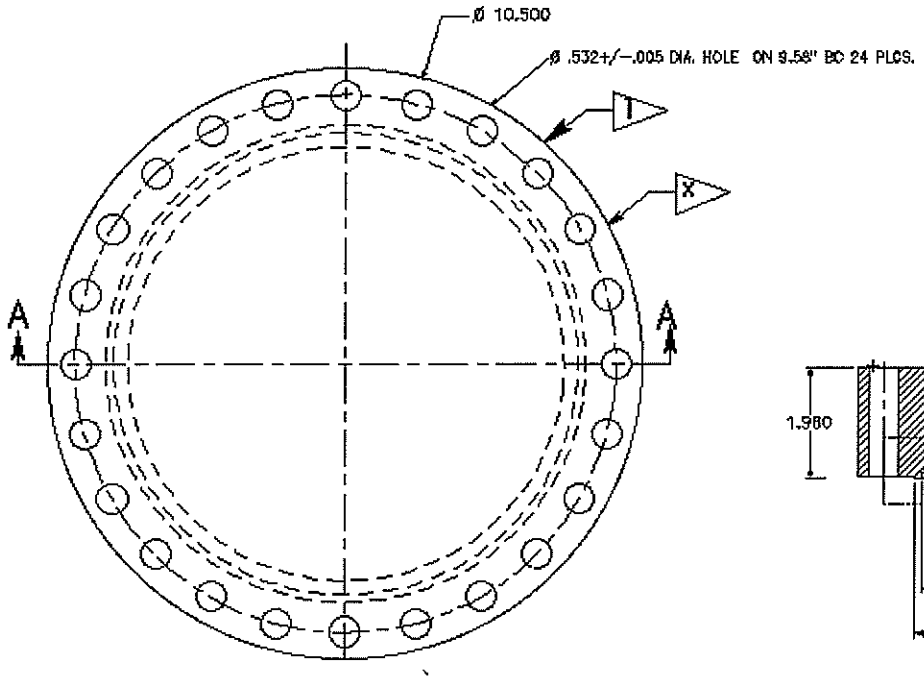

1 STAMP DRAWING NUMBER

MATERIAL: SS 304

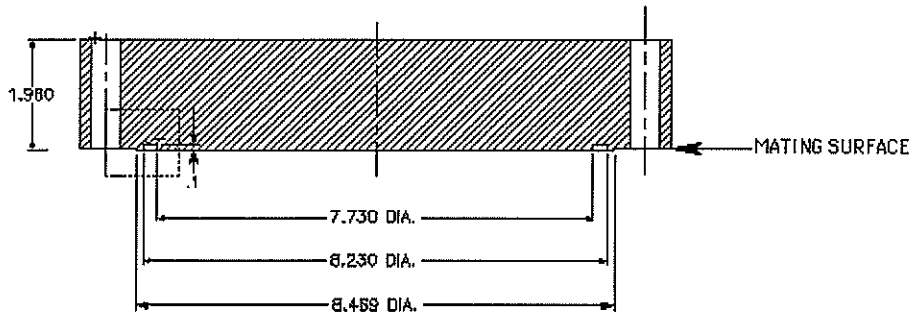

VIEW A-A

LEVEL 1 DRAWING

PressureChamber Lid
Blank C'Ring 850 MOP

AAA99-104243-00

APPENDIX C

CALCULATIONS

File name	Calculations performed
Energy_vessel.nb	energy calculations, peak and static overpressure
Vessel_stress2.nb	main vessel stress calculations, wall thickness, maximum pressure, proof test stress
Ellipsoidal_head_stress.nb	main vessel head thickness, max. pressure, proof test stress
Ellipsoidal_head_stress_LN2..nb	LN2 head thickness, max. pressure, proof test stress
Flange stress_hub_978.nb	main vessel C-Ring head bolt load, moment, stresses
Flange stress_hub_small_978.nb	detector port bolt load, moment, stresses
Flange stress_hub_403.nb	main vessel CF head bolt load, moment, stresses
Xe_vessel_det.nb	detector pipe stress calculations, wall thickness, maximum pressure, proof test stress
Detector_shell.nb	detector pipe weld reinforcement, area required, area available
Weld_load_stress.nb	detector pipe weld load allowable, strength of connecting elements (welds)
Xe_vessel_VCR.nb	VCR pipe stress calculations, wall thickness, maximum pressure, proof test stress
VCR_shell.nb	VCR pipe weld reinforcement, area required, area available
Weld_load_stress_VCR.nb	VCR pipe weld load allowable, strength of connecting elements (welds)
VCR_gamma_port.nb	VCR minimum head thickness calculation
Xe_vessel_LN2.nb	LN2 pipe stress calculations, wall thickness, maximum pressure, proof test stress
LN2_shell.nb	LN2 pipe weld reinforcement, area required, area available
Weld_load_stress_LN2.nb	LN2 pipe weld load allowable, strength of connecting elements (welds)
Head_350_K_openings2.nb	main vessel CF type flat head: stress concentration factor, thickness, distance between hole centers
Head_850_no_openings2.nb	main vessel C-ring type flat head: head thickness, hub thickness
Head_850_4.625_no_openings2.nb	detector port CF type flat head: head thickness, hub thickness
Bolt_load_1.33CF_350.nb	1.33 CF flange bolt load, head thickness
Bolt_load_2.75CF_350.nb	2.75 CF flange bolt load, head thickness
Misc.nb	main vessel: distance between openings, blind mounting hole depth, reinforcement of blind holes on CF flanges mounted on 10.5" Ø CF flange, impact testing
Fracture_critical_mat'l.nb	K_{ic}, K_I, critical crack lengths, Life cycles
Fragmant.nb	shielding calculations

```
(* Energy in Xenon Pressure Vessel *)
```

$MAWP = 978$

$P_1 = MAWP$

$P_2 = 14.7$

$K = 1.66$

$R_i = 3.8125$

$D2 = 1.5$

$D3 = 2.32$

$$V_1 = \frac{\pi (2 R_i)^2}{4} (12.2 - 0.5) \ (* \ in^3 \ *)$$

$$V_2 = \frac{\pi (D2)^2}{4} (8.058 - 0.2) \ (* \ in^3 \ *)$$

$$V_3 = \frac{\pi (D3)^2}{4} 2.17 \ (* \ in^3 \ *)$$

$$V_T = V_1 + V_2 + V_3 \ (* \ in^3 \ *)$$

$$Energy = \frac{P_1 V_T}{12 (K - 1)} \left(1 - \left(\frac{P_2}{P_1}\right)^{\frac{K-1}{K}}\right) \ (* \ ft\text{-}lb \ *)$$

$$Energy_{TNT} = \frac{Energy}{3414.1} \ (* \ g \ TNT \ *)$$

$$Energy_{lb} = Energy_{TNT} * 0.002200 \ (* \ lb. \ TNT \ *)$$

978

978

14.7

1.66

3.8125

1.5

2.32

534.263

13.8862

9.1733

557.323

55852.

16.3592

0.0359903

```
(* From MEDSS, 30 psi is the threshold for fatalities. 0.2
  to 15 psi cause physiological damage (ear, lung, etc.) However,
 the detailed calculation that follow (and proof tests of Conflat heads)
  show this vessel will leak before catastrophic failure. *)
```

```
(* The following is an analysis of the static overpressure in the confined room *)
```

$$P_{sov} = 1.15 \times 10^4 \frac{Energy_{lb}}{20 \times 30 \times 10} \text{ (* psig *)}$$

0.0689813

(* The peak overpressure is simply 6 X static *)

$$P_{pov} = 6 \times P_{sov} \text{ (* psig *)}$$

0.413888

```
(*Xenon Pressure Vessel Stress Calculations*)
```

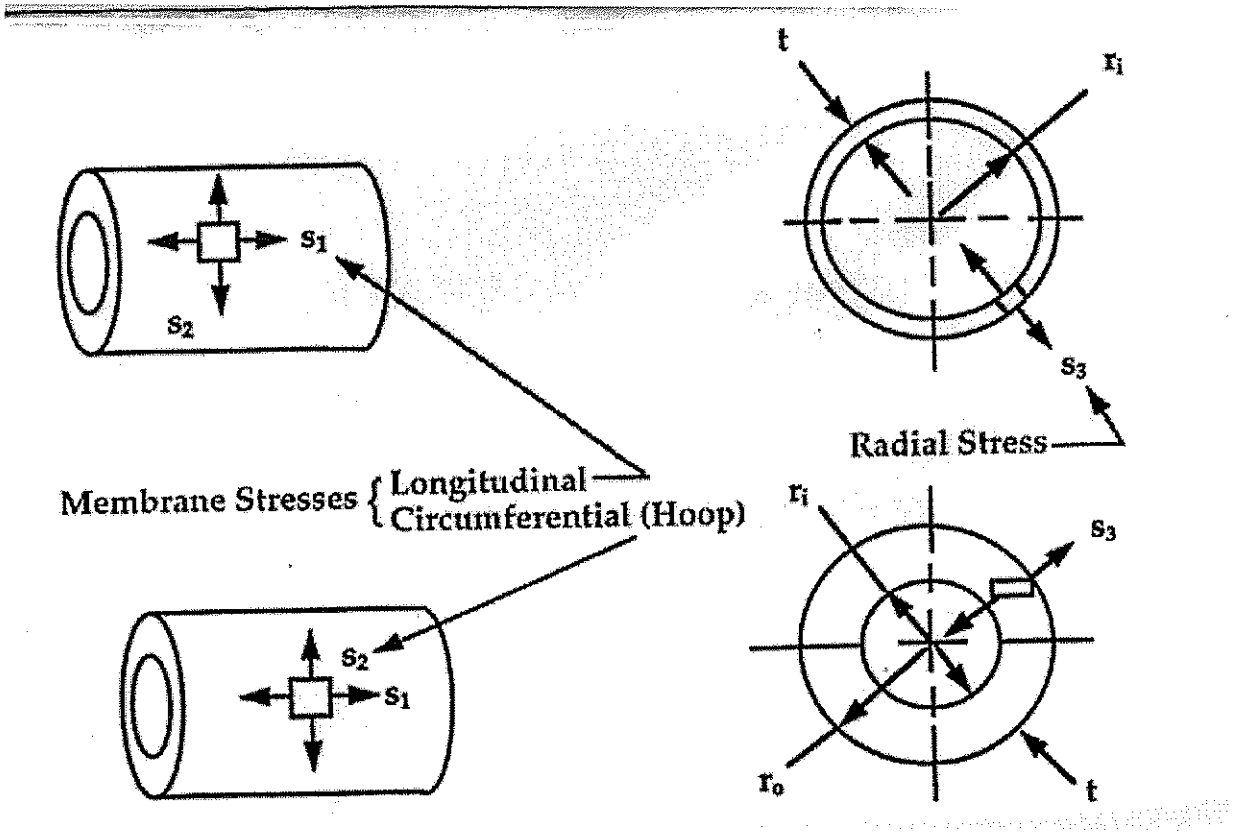

In[12]:=

```
MAWP = 978
σa = 16700 (*allowable stress for 316 L SST*)
σy = 37000
Ri = 3.8125
Ro = 4.3125
t = Ro - Ri
Ratio = Ro/Ri
If [1.1 < Ratio < 1.5, medium wall]
If [Ratio < 1.1, thin wall]
If [Ratio > 1.5, thick wall]
```

Out[12]= 978

Out[13]= 16700

Out[14]= 37000

Out[15]= 3.8125

Out[16]= 4.3125

Out[17]= 0.5

Out[18]= 1.13115

Out[19]= medium wall

In[22]:=

```
(*Longitudinal Stress, S1*)
```

$$S_1 = \frac{(\text{MAWP } R_i^2)}{(R_o^2 - R_i^2)}$$

```
(*Circumferential Stress, S2*)
```

$$S_2 = \frac{\text{MAWP } (R_o^2 + R_i^2)}{(R_o^2 - R_i^2)}$$

```
(*Radial Stress, S3*)
```

$$S_3 = -\text{MAWP}$$

```
(*Von Mises Stress*)
```

$$\sigma_m = \sqrt{0.5\ ((S_1 - S_2)^2 + (S_2 - S_3)^2 + (S_3 - S_1)^2)}$$

Out[22]= 3499.17

Out[23]= 7976.34

Out[24]= -978

Out[25]= 7754.69

```
(*wall thickness, in., max. pressure, psi*)

(*Circumferential / Longitudinal Stress: wall thickness, in., max. pressure, psi*)


Ef = 0.7
(*butt weld efficiency based on no inspection, Table UW-12*)
(*Circumferential butt welds connecting
  ellipsoidal head and hub to cylinder are Catagory A/B, Type 1 welds*)

p = 1.67 (* in., longitudinal pitch of tube holes *)
d = 0.5 (* in., diamnter of tube hole*)
Eflig = (p - d)/p (* UG-53, Ligaments *)
If [Ef < Eflig, Ef = Ef, Ef = Eflig]

tc = (MAWP Ri)/(σa Ef - 0.6 MAWP) (*UG27 c 1*)

Pc = (σa Ef t)/(Ri + 0.6 t) (*UG27 c 1*)
SFuc = Pc/MAWP (* Pc uses allowable stress so SF ~5 is also inlcluded*)


tl = (MAWP Ri)/(2 σa Ef + 0.4 MAWP) (*UG27 c 2*)

Pl = (2 σa Ef t)/(Ri - 0.4 t) (*UG27 c 2*)
SFul = Pl/MAWP (* Pl uses allowable stress so SF ~5 is also inlcluded*)

If[Pc < Pl, "circumferential stress applies", "longitudinal stress applies"]
If[tc > tl, "circumferential stress applies", "longitudinal stress applies"]
```

Out[15]= 0.7

Out[16]= 1.67

Out[17]= 0.5

Out[18]= 0.700599

Out[19]= 0.7

Out[20]= 0.335815

Out[21]= 1421.28

Out[22]= 1.45325

Out[23]= 0.156855

Out[189]= 3235.99

Out[190]= 13.2351

Out[191]= circumferential stress applies

Out[192]= circumferential stress applies

```
(*Check of Von Mises stress at 1.5 × MAWP for pressure test*)
MAWP = 1.5 × 978

(*Longitudinal Stress, S1*)
```

$$S_1 = \frac{(\text{MAWP } R_i^2)}{(R_o^2 - R_i^2)}$$

```
(*Circumferential Stress, S2*)
```

$$S_2 = \frac{\text{MAWP } (R_o^2 + R_i^2)}{(R_o^2 - R_i^2)}$$

```
(*Radial Stress, S3*)

S3 = -MAWP

(*Von Mises Stress*)
```

$$\sigma_m = \sqrt{0.5\ ((S_1 - S_2)^2 + (S_2 - S_3)^2 + (S_3 - S_1)^2)}$$

$$N_r = \frac{\sigma_y}{\sigma_m}$$

```
If[Nr > 1, "vessel OK at 1.5 × MAWP during pressure test"]
```

1467.

5248.76

11964.5

-1467.

11632.

3.18087

vessel OK at 1.5 × MAWP during pressure test

```
(*Xenon Pressure Vessel Stress Calculations*)
(*Ellipsoidal Head*)
```

In[704]:=

```
MAWP = 978
σa = 16700 (*allowable stress for 304 SST*)
σy = 32000
Di = 7.625
tw = 0.5
(*Circumferential butt welds connecting
  ellipsoidal head and hub to cylinder are Catagory A, Type 1 welds*)

Ef = 0.7 (*butt weld efficiency based on no inspection, Table UW-12*)
```

Out[704]= 978

Out[705]= 16700

Out[706]= 32000

Out[707]= 7.625

Out[708]= 0.5

Out[709]= 0.7

In[710]:= (*Wall thickness, in., max. pressure, psi*)

(*Circumferential Stress: wall thickness, in., max. pressure, psi*)

$$t_h = \frac{(\text{MAWP}\, D_i)}{(2\, \sigma_a\, E_f - 0.2\, \text{MAWP})} \quad \text{(*UG32 (d)*)}$$

$$P_m = \frac{(2\, \sigma_a\, E_f\, t_w)}{(D_i + 0.2\, t_w)} \quad \text{(*UG32 (d)*)}$$

$$SF_{uc} = \frac{P_m\, 4}{\text{MAWP}}$$

Out[710]= 0.321649

Out[711]= 1513.27

Out[712]= 6.18924

In[713]:=

```
(*Check of stress at 1.5 x MAWP for pressure test*)
MAWP = 1.5 x 978
```

$$\text{Solve}\left[\text{MAWP} == \frac{(2\,\sigma\,E_f\;t_w)}{(D_i + 0.2\;t_w)},\ \sigma\right]$$

$$SF_y = \frac{\sigma_y}{\sigma}$$

Out[713]= 1467.

Out[714]= $\{\{\sigma \to 16189.4\}\}$

Out[715]= $\frac{32000}{\sigma}$ $\quad \frac{16,700}{16189.4} \geq 1.0$ ✓✓

```
(*Xenon Pressure Vessel Stress Calculations*)
(*Ellipsoidal Head, LN2 Trap*)
```

In[716]:=

```
MAWP = 978
σa = 16700 (*allowable stress for 304 SST*)
σy = 32000
Di = 1.5
tw = 0.2
(*Circumferential butt welds connecting
  ellipsoidal head and hub to cylinder are Catagory A, Type 1 welds*)

Ef = 0.7 (*butt weld efficiency based on no inspection, Table UW-12*)
```

Out[716]= 978

Out[717]= 16700

Out[718]= 32000

Out[719]= 1.5

Out[720]= 0.2

Out[721]= 0.7

In[722]:= (*Wall thickness, in., max. pressure, psi*)

(*Circumferential Stress: wall thickness, in., max. pressure, psi*)

$$t_h = \frac{(\text{MAWP}\, D_i)}{(2\, \sigma_a\, E_f - 0.2\, \text{MAWP})} \quad \text{(*UG32 (d)*)}$$

$$P_m = \frac{(2\, \sigma_a\, E_f\, t_w)}{(D_i + 0.2\, t_w)} \quad \text{(*UG32 (d)*)}$$

$$SF_{uc} = \frac{P_m\, 4}{\text{MAWP}}$$

Out[722]= 0.0632753

Out[723]= 3036.36

Out[724]= 12.4187

In[725]:=

```
(*Check of stress at 1.5 × MAWP for pressure test*)
MAWP = 1.5 × 978
```

$$\text{Solve}\left[\text{MAWP} == \frac{(2\,\sigma\,E_f\;t_w)}{(D_i + 0.2\;t_w)},\ \sigma\right]$$

$$SF_y = \frac{\sigma_y}{\sigma}$$

Out[725]= 1467.

Out[726]= {{σ → 8068.5}}

Out[727]= $\frac{32000}{\sigma}$

$\frac{161700}{8068.5} \geq 1$

(2.077

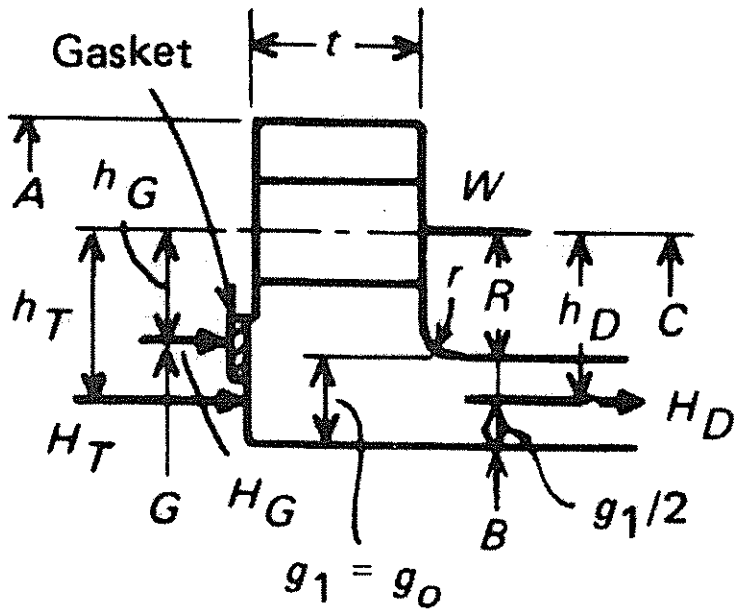

(5)

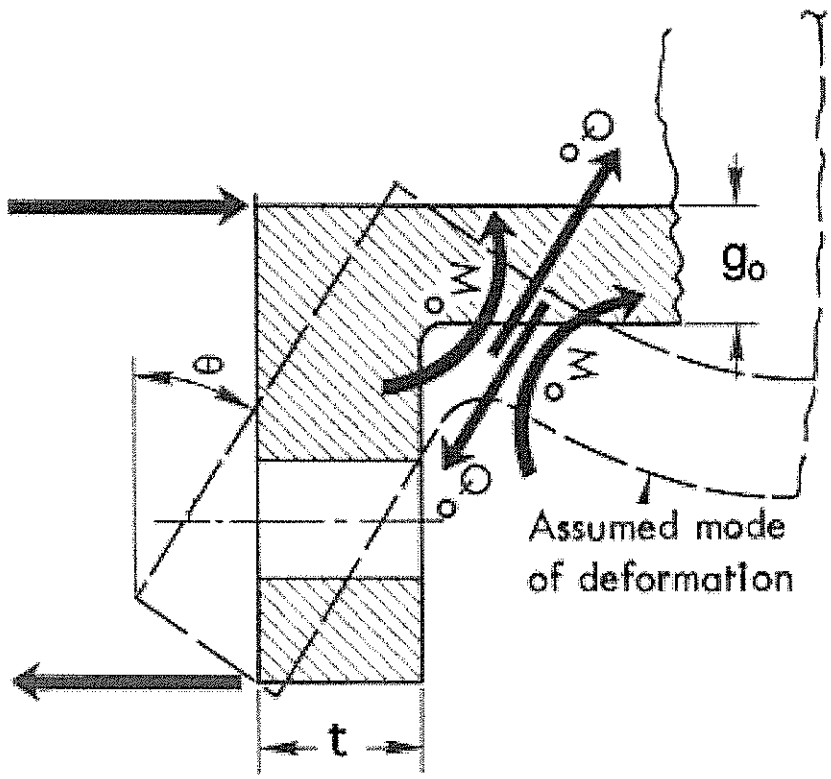


```
(* Bolted Flange Connections with Ring Type Joint *)
(* Integral Flange Type, Appendix 2, Figure 2-4 (5) shown above *)
(* 850 psia MOP, custom flange, ring type joint, metal seal *)
```

```
In[1]:= (* Bolt Load at operating conditions *)

        G = 7.980 (* Diameter, in. at gasket load location *)
        P = 978  (* MAWP, internal design pressure *)
        m = 6.5 (* gasket factor ring joint, Table 2-4.1 *)
        N_g = 0.25 (* width of ring type gasket *)
        b_o = N_g/8 (* Table 2-5.2 (6) *)
        If[b_o <= 0.25, b = b_o, b = .5 Sqrt[b_o]]
        y = 26000 (* psi, design seating stress for metal seal, Table 2-5.1 *)
        H = 0.785 G^2 P (* lb., Total hydrostatic end force *)
        H_p = 2 b × π G m P (* lb., Total joint-contact surface compression load *)
        W_m1 = H + H_p (* Minimum required bolt load, for operating *)
        W_m2 = π G b y (* Minimum required bolt load, for gasket seating *)

Out[1]= 7.98

Out[2]= 978

Out[3]= 6.5

Out[4]= 0.25

Out[5]= 0.03125

Out[6]= 0.03125

Out[7]= 26000

Out[8]= 48889.4

Out[9]= 9960.59

Out[10]= 58849.9

Out[11]= 20369.3
```

```
(* Flange Design Bolt Load*)
Ab = 0.1406 × 24 (*cross sectional area of 1/2-13 screw*)
SF = 4 (* MEDSS *)
ST = 81000
(*Unbrako -  KS 1216 1/2-13 SHCS, 160, ksi tensile strength; T = -400 °F to 1200 °F
 OR ASTM-A493-95 Grade S30430; 81 ksi tensile strength *)
Sa = ST ÷ SF
Lb = Sa × Ab  (* lb., Max allowable bolt load *)
Am1 = Wm1 / Sa (* in^2,cross-sectional area of bolts under operating condition *)
Am2 = Wm2 / Sa (*  in^2, cross-sectional area of bolts for gasket seating *)
 If[Am1 > Am2, Am = Am1, Am = Am2]
(* in^2, total required cross-sectional area of bolts *)

Wo = Wm1 (* lb., Flange design bolt load, for operating *)
Wg = (Am + Ab) Sa / 2  (* lb., Flange design bolt load, for gasket seating *)
```

Out[12]= 3.3744

Out[13]= 4

Out[14]= 81000

Out[15]= 20250

Out[16]= 68331.6

Out[17]= 2.90617

Out[18]= 1.00589

Out[19]= 2.90617

Out[20]= 58849.9

Out[21]= 63590.8

In[22]:=

```
(* Flange Moment *)
(* Table 2-6, integral flange *)
Cb = 9.58 (* in., bolt circle diameter *)
g1 = 0.5 (* in., hub flange thickness *)
B = 7.625 (*in., inside diameter of flange *)
test = 20 g1
R = (Cb - B)/2 - g1
hD =
 R + 0.5 g1 (* in., radial distance from bolt circle to the circle on which hD acts *)
hG = (Cb - G)/2
hT = (R + g1 + hG)/2
HD = 0.785 B^2 P (* lb., total hydrostatic force on area inside of flange *)
 MD = HD hD

HT = H - HD
(* lb., difference, total hydrostatic end force less HD *)
 MT = HT hT

HG = Wo - H (* lb., gasket load *)
 MG = HG hG

Mo = MD + MT + MG (* in-lb., total flange moment due to operating conditions *)

Mg = Wo (Cb - G)/2 (* in-lb., total flange moment due to gasket seating *)
 If[Mo > Mg, "operating conditions control", "gasket seating conditions control"]
 If[Mo > Mg, Mo = Mo, Mo = Mg]
```

Out[22]= 9.58

Out[23]= 0.5

Out[24]= 7.625

Out[25]= 10.

Out[26]= 0.4775

Out[27]= 0.7275

Out[28]= 0.8

Out[29]= 0.88875

Out[30]= 44636.3

Out[31]= 32472.9

Out[32]= 4253.05

Out[33]= 3779.9

Out[120]= 9960.59

Out[121]= 7968.47

Out[122]= 44221.3

Out[123]= 47080.

Out[124]= gasket seating conditions control

Out[125]= 47080.

In[126]:= (*Flange Stress *)

$\epsilon = 1$ (*hub stress correction factor*)
$t = 1.25$ (* in., flange thickness *)
$h = 0.125$ (* in., hub length *)
$t_e = 2\, g_1$
$A = 10.5$ (* in., OD of flange *)
$K = A / B$

$$T = \frac{K^2\,(1 + 8.55246\,\mathrm{Log}[10,\ K]) - 1}{(1.04720 + 1.9448\,K^2)\,(K - 1)}$$ (* factor, Fig. 2-7.1*)

$$U = \frac{K^2\,(1 + 8.55246\,\mathrm{Log}[10,\ K]) - 1}{1.36136\,(K^2 - 1)\,(K - 1)}$$ (* factor, Fig. 2-7.1*)

$$Y = \frac{1}{K - 1}\left(0.66845 + 5.71690\,\frac{K^2\,\mathrm{Log}[10,\ K]}{(K^2 - 1)}\right)$$ (* factor, Fig. 2-7.1*)

$$Z = \frac{K^2 + 1}{K^2 - 1}$$ (* factor, Fig. 2-7.1*)

$g_o = g_1$
g_1 / g_o
$h_o = \sqrt{B\, g_o}$
h / h_o
$V = 0.550103$ (* Fig. 2-7.3 Integral flange factor *)

$$d_f = \frac{U}{V}\, h_o\, g_o{}^2$$

$$L = \frac{t_e + 1}{T} + \frac{t^3}{d_f}$$

$$S_H = \frac{\epsilon\, M_o}{L\, g_1{}^2\, B}$$ (* psi, Longitudinal hub stress *)

$$S_R = \frac{(1.33\, t_e + 1)\, M_o}{L\, t^2\, B}$$ (* psi, Radial flange stress *)

(* psi, Tangental flange stress *)

$$S_T = \frac{Y\, M_o}{t^2\, B} - Z\, S_R$$

Out[126]= 1

Out[127]= 1.25

Out[128]= 0.125

Out[129]= 1.

Out[130]= 10.5

Out[131]= 1.37705

Out[132]= 1.7642

Out[133]= 6.84641

Out[134]= 6.23025

Out[135]= 3.23148

Out[136]= 0.5

Out[137]= 1.

Out[138]= 1.95256

Out[139]= 0.0640184

Out[140]= 0.550103

Out[141]= 6.07525

Out[142]= 1.45515

Out[143]= 16972.6

Out[144]= 6327.39

Out[145]= 4172.77

In[146]:=

```
(* Allowable Flange Stress *)

Sf = 16700 (* allowable stress for 316 L -20 to 100 °F, Table 1 A, Section II *)
 If[SH < 1.5 Sf, "hub stress OK", "hub stress too large"]
 If[SR < Sf, "radial stress OK", "radial stress too large"]
 If[ST < Sf, "tangental stress OK", "tangental stress too large"]
 If[(SH + SR)/2 < Sf, "average stress1 OK", "average stress1 too large"]
 If[(SH + ST)/2 < Sf, "average stress2 OK", "average stress2 too large"]
```

Out[146]= 16700

Out[147]= hub stress OK

Out[148]= radial stress OK

Out[149]= tangental stress OK

Out[150]= average stress1 OK

Out[151]= average stress2 OK

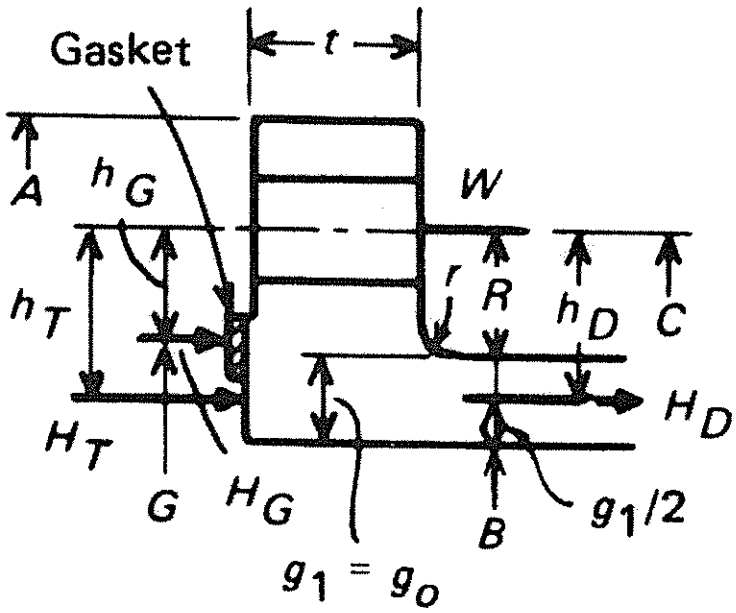

(5)

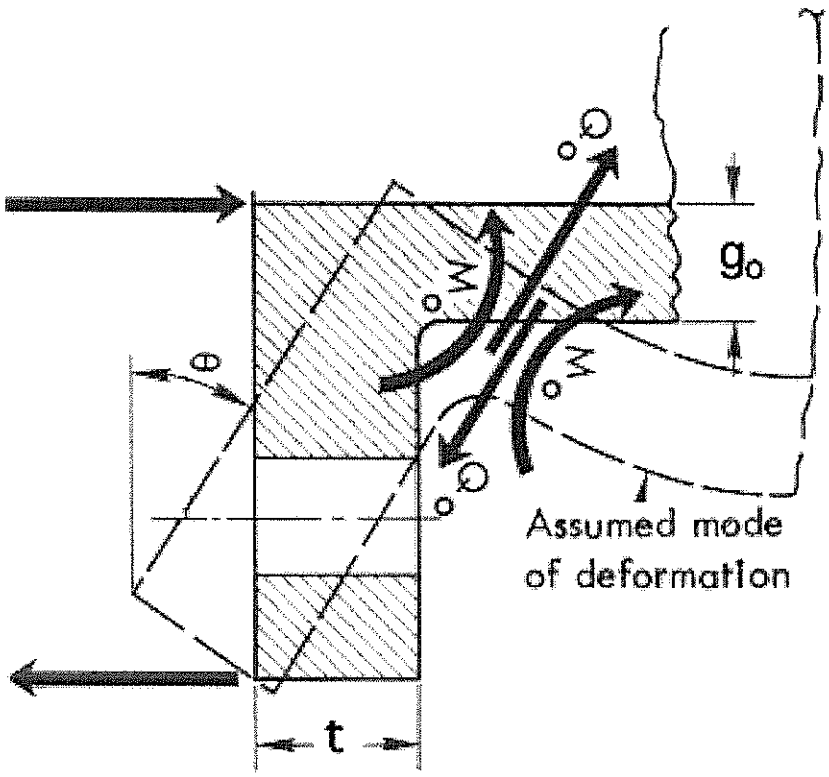


```
(* Bolted Flange Connections
  with flat metal Copper Gasket, Xe chamber Detector Port *)
(* Integral Flange Type, Appendix 2, Figure 2-4 (5) shown above *)
(* 850 psia MOP, conflat type head *)
```

```
In[249]:= (* Bolt Load at operating conditions *)

          G = 3.35 (* Diameter, in. at gasket load location *)
          P = 978  (* MAWP, internal design pressure *)
          m = 4.75 (* gasket factor flat Cu gasket, Table 2-4.1 *)
          Ng = 0.5 (* width of Cu gasket *)
          bo = Ng/32 (* N/4 for multiple serrations Table 2-5.2 (5),
           assume N/32 given a single knife edge serration as used in Conflats *)
          If[bo <= 0.25, b = bo, b = .5 Sqrt[bo]]
          y = 13000 (* psi, design seating stress for soft copper, Table 2-5.1 *)
          H = 0.785 G^2 P (* lb., Total hydrostatic end force *)
          Hp = 2 b × π G m P (* lb., Total joint-contact surface compression load *)
          Wm1 = H + Hp (* Minimum required bolt load, for operating *)
          Wm2 = π G b y (* Minimum required bolt load, for gasket seating *)

Out[249]= 3.35

Out[250]= 978

Out[251]= 4.75

Out[252]= 0.5

Out[253]= 0.015625

Out[254]= 0.015625

Out[255]= 13000

Out[256]= 8615.85

Out[257]= 1527.84

Out[258]= 10143.7

Out[259]= 2137.76
```

```
In[12]:= (* Flange Design Bolt Load*)
         Ab = 0.0519 × 10 (*cross sectional area of 5/16-24 screw*)
         SF = 4 (* MEDSS *)
         ST = 81000
         (*Unbrako -  KS 1216 5/16-24 SHCS, 160, ksi tensile strength; T = -400 °F to 1200 °F
          OR ASTM-A493-95 Grade S30430; 81 ksi tensile strength *)
         Sa = ST ÷ SF
         Lb = Sa × Ab  (* lb., Max allowable bolt load *)
         Am1 = Wm1 / Sa (* in^2,cross-sectional area of bolts under operating condition *)
         Am2 = Wm2 / Sa (*  in^2, cross-sectional area of bolts for gasket seating *)
          If[Am1 > Am2, Am = Am1, Am = Am2]
         (* in^2, total required cross-sectional area of bolts *)

         Wo = Wm1 (* lb., Flange design bolt load, for operating *)
         Wg = (Am + Ab) Sa / 2  (* lb., Flange design bolt load, for gasket seating *)

Out[12]= 0.519

Out[13]= 4

Out[14]= 81000

Out[15]= 20250

Out[16]= 10509.7

Out[17]= 0.500923

Out[18]= 0.105568

Out[19]= 0.500923

Out[20]= 10143.7

Out[21]= 10326.7
```

In[332]:=

```
(* Flange Moment *)
(* Table 2-6, integral flange *)
Cb = 4.030 (* in., bolt circle diameter *)
g1 = 0.275 (* in., hub flange thickness *)
B = 2.32 (*in., inside diameter of flange *)
test = 20 g1 (* Refer to Appx 2, 2-3 notations, for design options *)
R = (Cb - B)/2 - g1
hD =
 R + 0.5 g1 (* in., radial distance from bolt circle to the circle on which hD acts *)
hG = (Cb - G)/2
hT = (R + g1 + hG)/2
HD = 0.785 B^2 P (* lb., total hydrostatic force on area inside of flange *)
 MD = HD hD

HT = H - HD
(* lb., difference, total hydrostatic end force less HD *)
 MT = HT hT

HG = Wo - H (* lb., gasket load *)
 MG = HG hG

Mo = MD + MT + MG (* in-lb., total flange moment due to operating conditions *)

Mg = Wo (Cb - G)/2 (* in-lb., total flange moment due to gasket seating *)
 If[Mo > Mg, "operating conditions control", "gasket seating conditions control"]
 If[Mo > Mg, Mo = Mo, Mo = Mg]
```

Out[332]= 4.03

Out[333]= 0.275

Out[334]= 2.32

Out[335]= 5.5

Out[336]= 0.58

Out[337]= 0.7175

Out[338]= 0.34

Out[339]= 0.5975

Out[340]= 4132.23

Out[341]= 2964.87

Out[342]= 4483.62

Out[343]= 2678.96

Out[185]= 1527.84

Out[186]= 519.465

Out[187]= 6163.3

Out[188]= 3448.85

Out[189]= operating conditions control

Out[190]= 6163.3

In[191]:= (*Flange Stress *)

$\epsilon = 1$ (*hub stress correction factor*)

$t = 0.81$ (* in., flange thickness *)

$h = 0.0$ (* in., hub length *)

$t_e = 2\, g_1$

$A = 4.63$ (* in., OD of flange *)

$K = A / B$

$$T = \frac{K^2\,(1 + 8.55246\,\mathrm{Log}[10,\ K]) - 1}{(1.04720 + 1.9448\,K^2)\,(K - 1)}$$ (* factor, Fig. 2-7.1*)

$$U = \frac{K^2\,(1 + 8.55246\,\mathrm{Log}[10,\ K]) - 1}{1.36136\,(K^2 - 1)\,(K - 1)}$$ (* factor, Fig. 2-7.1*)

$$Y = \frac{1}{K - 1}\left(0.66845 + 5.71690\,\frac{K^2\,\mathrm{Log}[10,\ K]}{(K^2 - 1)}\right)$$ (* factor, Fig. 2-7.1*)

$$Z = \frac{K^2 + 1}{K^2 - 1}$$ (* factor, Fig. 2-7.1*)

$g_o = g_1$

g_1 / g_o

$h_o = \sqrt{B\, g_o}$

h / h_o

$V = 0.550103$ (* Fig. 2-7.3 Integral flange factor *)

$$d_f = \frac{U}{V}\, h_o\, g_o{}^2$$

$$L = \frac{t_e + 1}{T} + \frac{t^3}{d_f}$$

$$S_H = \frac{\epsilon\, M_o}{L\, g_1{}^2\, B}$$ (* psi, Longitudinal hub stress *)

$$S_R = \frac{(1.33\, t_e + 1)\, M_o}{L\, t^2\, B}$$ (* psi, Radial flange stress *)

(* psi, Tangental flange stress *)

$$S_T = \frac{Y\, M_o}{t^2\, B} - Z\, S_R$$

Out[191]= 1

Out[192]= 0.81

Out[193]= 0.

Out[194]= 0.55

Out[195]= 4.63

Out[196]= 1.99569

Out[197]= 1.50825

Out[198]= 3.26596

Out[199]= 2.97203

Out[200]= 1.67052

Out[201]= 0.275

Out[202]= 1.

Out[203]= 0.798749

Out[204]= 0.

Out[205]= 0.550103

Out[206]= 0.358627

Out[207]= 2.50956

Out[208]= 13997.9

Out[209]= 2793.7

Out[210]= 7367.04

In[211]:=

```
(* Allowable Flange Stress *)

Sf = 16700 (* allowable stress for 304 L -20 to 100 °F, Table 1 A, Section II *)
 If[SH < 1.5 Sf, "hub stress OK", "hub stress too large"]
 If[SR < Sf, "radial stress OK", "radial stress too large"]
 If[ST < Sf, "tangental stress OK", "tangental stress too large"]
 If[(SH + SR)/2 < Sf, "average stress1 OK", "average stress1 too large"]
 If[(SH + ST)/2 < Sf, "average stress2 OK", "average stress2 too large"]
```

Out[211]= 16700

Out[212]= hub stress OK

Out[213]= radial stress OK

Out[214]= tangental stress OK

Out[215]= average stress1 OK

Out[216]= average stress2 OK

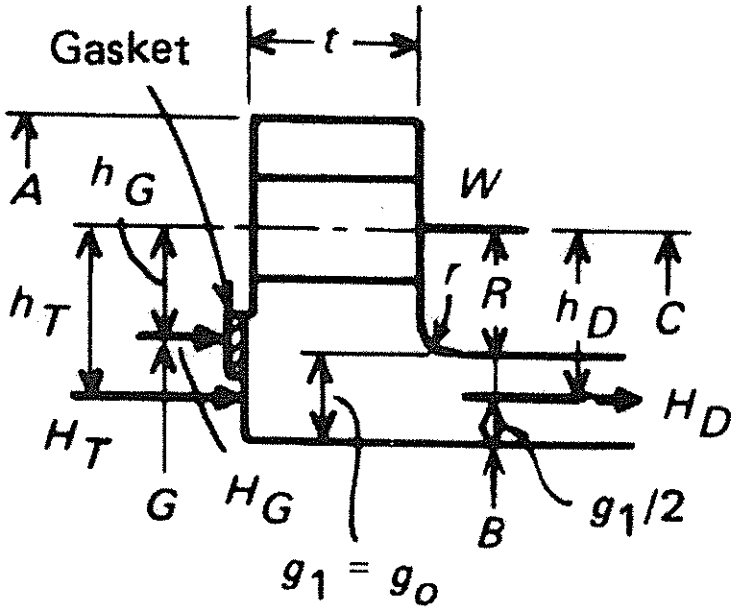

(5)

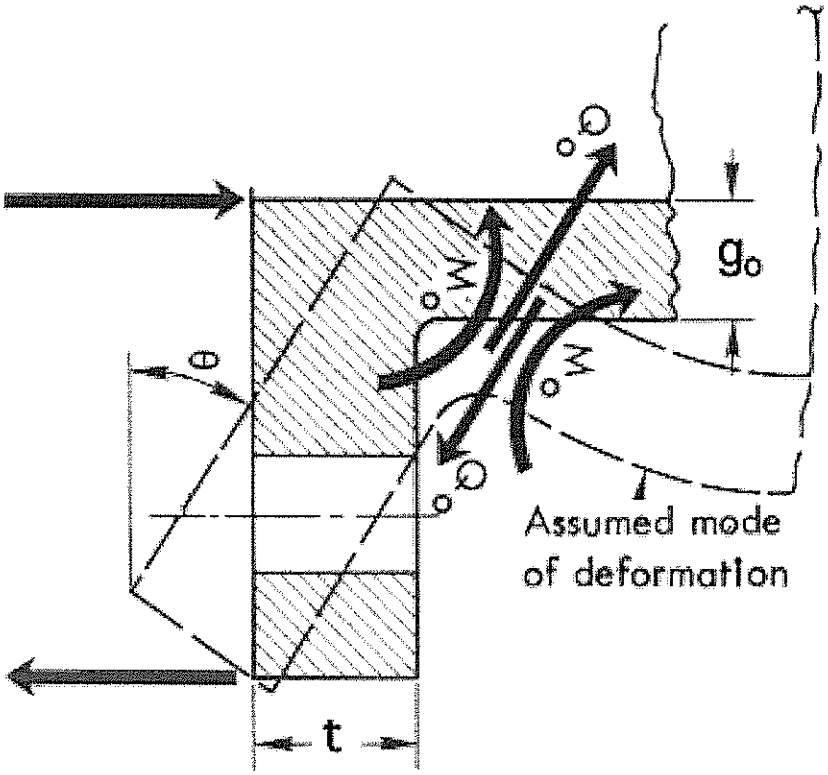


```
(* Bolted Flange Connections with flat metal Copper Gasket *)
(* Integral Flange Type, Appendix 2, Figure 2-4 (5) shown above *)
(* 350 psia MOP, conflat type head *)
```

```
In[184]:= (* Bolt Load at operating conditions *)

          G = 8.54 (* Diameter, in. at gasket load location *)
          P = 403  (* MAWP, internal design pressure *)
          m = 4.75 (* gasket factor flat Cu gasket, Table 2-4.1 *)
          Ng = 0.5 (* width of Cu gasket *)
          bo = Ng/32 (* N/4 for multiple serrations Table 2-5.2 (5),
           assume N/32 given a single knife edge serration as used in Conflats *)
          b = bo
          y = 13000 (* psi, design seating stress for soft copper, Table 2-5.1 *)
          H = 0.785 G^2 P (* lb., Total hydrostatic end force *)
          Hp = 2 b × π G m P (* lb., Total joint-contact surface compression load *)
          Wm1 = H + Hp (* Minimum required bolt load, for operating *)
          Wm2 = π G b y (* Minimum required bolt load, for gasket seating *)

Out[184]= 8.54

Out[185]= 403

Out[186]= 4.75

Out[187]= 0.5

Out[188]= 0.015625

Out[189]= 0.015625

Out[190]= 13000

Out[191]= 23072.3

Out[192]= 1604.93

Out[193]= 24677.2

Out[194]= 5449.68
```

```
In[33]:= (* Flange Design Bolt Load*)
         Ab = 0.1406 × 24 (*cross sectional area of 1/2-13 screw*)
         SF = 4 (* MEDSS *)
         ST = 81000
         (*Unbrako -  KS 1216 1/2-13 SHCS, 160, ksi tensile strength; T = -400 °F to 1200 °F
          OR ASTM-A493-95 Grade S30430; 81 ksi tensile strength *)
         Sa = ST ÷ SF
         Lb = Sa × Ab  (* lb., Max allowable bolt load *)
         Am1 = Wm1 / Sa (* in^2,cross-sectional area of bolts under operating condition *)
         Am2 = Wm2 / Sa (*  in^2, cross-sectional area of bolts for gasket seating *)
          If[Am1 > Am2, Am = Am1, Am = Am2]
         (* in^2, total required cross-sectional area of bolts *)

         Wo = Wm1 (* lb., Flange design bolt load, for operating *)
         Wg = (Am + Ab) Sa / 2  (* lb., Flange design bolt load, for gasket seating *)

Out[33]= 3.3744

Out[34]= 4

Out[35]= 81000

Out[36]= 20250

Out[37]= 68331.6

Out[38]= 1.21863

Out[39]= 0.26912

Out[40]= 1.21863

Out[41]= 24677.2

Out[42]= 46504.4
```

In[205]:=

```
(* Flange Moment *)
(* Table 2-6, integral flange *)
Cb = 9.58 (* in., bolt circle diameter *)
g1 = 0.5 (* in., hub flange thickness *)
B = 7.625 (*in., inside diameter of flange *)
test = 20 g1
R = (Cb - B)/2 - g1
hD =
 R + 0.5 g1 (* in., radial distance from bolt circle to the circle on which hD acts *)
hG = (Cb - G)/2
hT = (R + g1 + hG)/2
HD = 0.785 B^2 P (* lb., total hydrostatic force on area inside of flange *)
 MD = HD hD

HT = H - HD
(* lb., difference, total hydrostatic end force less HD *)
 MT = HT hT

HG = Wo - H (* lb., gasket load *)
 MG = HG hG

Mo = MD + MT + MG (* in-lb., total flange moment due to operating conditions *)

Mg = Wo (Cb - G)/2 (* in-lb., total flange moment due to gasket seating *)
 If[Mo > Mg, "operating conditions control", "gasket seating conditions control"]
 If[Mo > Mg, Mo = Mo, Mo = Mg]
```

Out[205]= 9.58

Out[206]= 0.5

Out[207]= 7.625

Out[208]= 10.

Out[209]= 0.4775

Out[210]= 0.7275

Out[211]= 0.52

Out[212]= 0.74875

Out[213]= 18393.1

Out[214]= 13381.

Out[215]= 4679.2

Out[216]= 3503.55

Out[250]= 1604.93

Out[251]= 834.564

Out[252]= 17719.1

Out[253]= 12832.1

Out[254]= operating conditions control

Out[255]= 17719.1

In[256]:= (*Flange Stress *)

$\epsilon = 1$ (*hub stress correction factor*)
$t = 1.25$ (* in., flange thickness *)
$h = 0.125$ (* in., hub length *)
$t_e = 2\, g_1$
$A = 10.5$ (* in., OD of flange *)
$K = A / B$

$$T = \frac{K^2 (1 + 8.55246 \,\mathrm{Log}[10, K]) - 1}{(1.04720 + 1.9448 K^2)(K - 1)}$$ (* factor, Fig. 2-7.1*)

$$U = \frac{K^2 (1 + 8.55246 \,\mathrm{Log}[10, K]) - 1}{1.36136 (K^2 - 1)(K - 1)}$$ (* factor, Fig. 2-7.1*)

$$Y = \frac{1}{K - 1}\left(0.66845 + 5.71690 \frac{K^2 \,\mathrm{Log}[10, K]}{(K^2 - 1)}\right)$$ (* factor, Fig. 2-7.1*)

$$Z = \frac{K^2 + 1}{K^2 - 1}$$ (* factor, Fig. 2-7.1*)

$g_o = g_1$
g_1 / g_o
$h_o = \sqrt{B\, g_o}$
h / h_o
$V = 0.550103$ (* Fig. 2-7.3 Integral flange factor *)

$$d_f = \frac{U}{V} h_o\, g_o^2$$

$$L = \frac{t_e + 1}{T} + \frac{t^3}{d_f}$$

$$S_H = \frac{\epsilon M_o}{L\, g_1^2\, B}$$ (* psi, Longitudinal hub stress *)

$$S_R = \frac{(1.33\, t_e + 1)\, M_o}{L\, t^2\, B}$$ (* psi, Radial flange stress *)

(* psi, Tangental flange stress *)

$$S_T = \frac{Y M_o}{t^2 B} - Z\, S_R$$

Out[256]= 1

Out[257]= 1.25

Out[258]= 0.125

Out[259]= 1.

Out[260]= 10.5

Out[261]= 1.37705

Out[262]= 1.7642

Out[263]= 6.84641

Out[264]= 6.23025

Out[265]= 3.23148

Out[266]= 0.5

Out[267]= 1.

Out[268]= 1.95256

Out[269]= 0.0640184

Out[270]= 0.550103

Out[271]= 6.07525

Out[272]= 1.45515

Out[273]= 6387.84

Out[274]= 2381.39

Out[275]= 1570.47

In[276]:=

```
(* Allowable Flange Stress *)

Sf = 16700 (* allowable stress for 316 L -20 to 100 °F, Table 1 A, Section II *)
 If[SH < 1.5 Sf, "hub stress OK", "hub stress too large"]
 If[SR < Sf, "radial stress OK", "radial stress too large"]
 If[ST < Sf, "tangental stress OK", "tangental stress too large"]
 If[(SH + SR)/2 < Sf, "average stress1 OK", "average stress1 too large"]
 If[(SH + ST)/2 < Sf, "average stress2 OK", "average stress2 too large"]
```

Out[276]= 16700

Out[277]= hub stress OK

Out[278]= radial stress OK

Out[279]= tangental stress OK

Out[280]= average stress1 OK

Out[281]= average stress2 OK

```
(*Xenon Pressure Vessel Stress Calculations - Detector Port*)
```

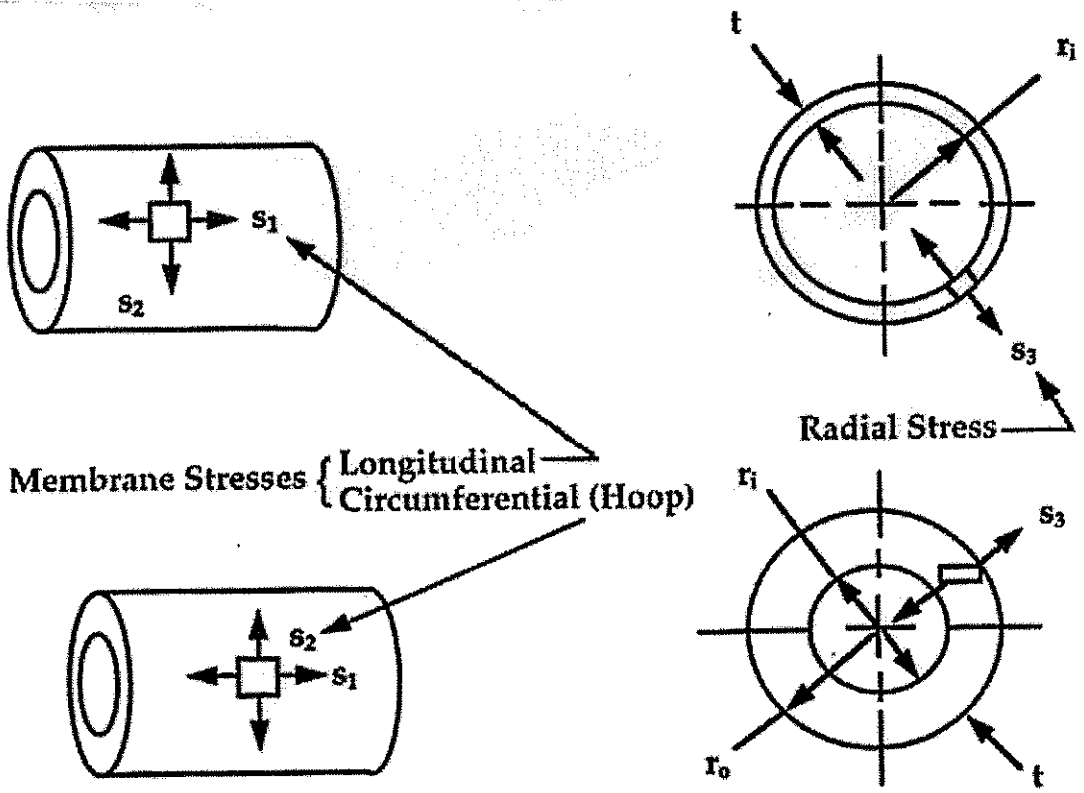

In[376]:=

```
MAWP = 978
σa = 16700 (*allowable stress for 316 L SST*)
σy = 37000
Ri = 1.1615
Ro = 1.4375
t = Ro - Ri
Ratio = Ro/Ri
If [1.1 < Ratio < 1.5, medium wall]
If [Ratio < 1.1, thin wall]
If [Ratio > 1.5, thick wall]
```

Out[376]= 978

Out[377]= 16700

Out[378]= 37000

Out[379]= 1.1615

Out[380]= 1.4375

Out[381]= 0.276

Out[382]= 1.23762

Out[383]= medium wall

In[386]:=

(*Longitudinal Stress, S_1*)

$$S_1 = \frac{(\text{MAWP } R_i^2)}{(R_o^2 - R_i^2)}$$

(*Circumferential Stress, S_2*)

$$S_2 = \frac{\text{MAWP } (R_o^2 + R_i^2)}{(R_o^2 - R_i^2)}$$

(*Radial Stress, S_3*)

$$S_3 = -\text{MAWP}$$

(*Von Mises Stress*)

$$\sigma_m = \sqrt{0.5\ ((S_1 - S_2)^2 + (S_2 - S_3)^2 + (S_3 - S_1)^2)}$$

Out[386]= 1839.34

Out[387]= 4656.68

Out[388]= -978

Out[389]= 4879.78

In[42]:=

```
(*wall thickness, in., max. pressure, psi*)

(*Circumferential Stress: wall thickness, in., max. pressure, psi*)
```

$E_f = 0.7$ (*butt weld efficiency based on no inspection, Table UW-12*)

$$t_c = \frac{(\text{MAWP}\, R_i)}{(\sigma_a E_f - 0.6\, \text{MAWP})}$$ (*UG27 c 1*)

$$P_c = \frac{(\sigma_a E_f\, t)}{(R_i + 0.6\, t)}$$ (*UG27 c 1*)

$$SF_{uc} = \frac{P_c}{\text{MAWP}}$$ (* P_c uses allowable stress so SF ~5 is also inlcluded*)

```
(*Longitudinal Stress: wall thickness, in., max. pressure, psi*)
(*Circumferential butt welds connecting
  ellipsoidal head and hub to cylinder are Catagory A, Type 1 welds*)
```

$E_f = 0.7$ (*butt weld efficiency based on no inspection, Table UW-12*)

$$t_1 = \frac{(\text{MAWP}\, R_i)}{(2\, \sigma_a E_f + 0.4\, \text{MAWP})}$$ (*UG27 c 2*)

$$P_1 = \frac{(2\, \sigma_a E_f\, t)}{(R_i - 0.4\, t)}$$ (*UG27 c 2*)

$$SF_{ul} = \frac{P_1}{\text{MAWP}}$$ (* P_1 uses allowable stress so SF ~5 is also inlcluded*)

```
If[Pc < P1, "circumferential stress applies", "longitudinal stress applies"]
If[tc > t1, "circumferential stress applies", "longitudinal stress applies"]
```

Out[42]= 0.7

Out[43]= 0.102308

Out[44]= 2431.2

Out[45]= 2.48589

Out[46]= 0.7

Out[47]= 0.0477867

Out[48]= 6139.17

Out[49]= 6.27727

Out[50]= circumferential stress applies

Out[51]= circumferential stress applies

In[400]:=

```
(*Check of Von Mises stress at 1.5 x MAWP for pressure test*)
MAWP = 1.5 x 978

(*Longitudinal Stress, S1*)
```

$$S_1 = \frac{(\text{MAWP } R_i^2)}{(R_o^2 - R_i^2)}$$

```
(*Circumferential Stress, S2*)
```

$$S_2 = \frac{\text{MAWP } (R_o^2 + R_i^2)}{(R_o^2 - R_i^2)}$$

```
(*Radial Stress, S3*)
```

$$S_3 = -\text{MAWP}$$

```
(*Von Mises Stress*)
```

$$\sigma_m = \sqrt{0.5\ ((S_1 - S_2)^2 + (S_2 - S_3)^2 + (S_3 - S_1)^2)}$$

$$N_r = \frac{\sigma_y}{\sigma_m}$$

```
If[Nr > 1, "vessel OK at 1.5 x MAWP during pressure test"]
```

Out[400]= 1467.

Out[401]= 2759.01

Out[402]= 6985.02

Out[403]= -1467.

Out[404]= 7319.66

Out[405]= 5.05488

Out[406]= vessel OK at 1.5 x MAWP during pressure test

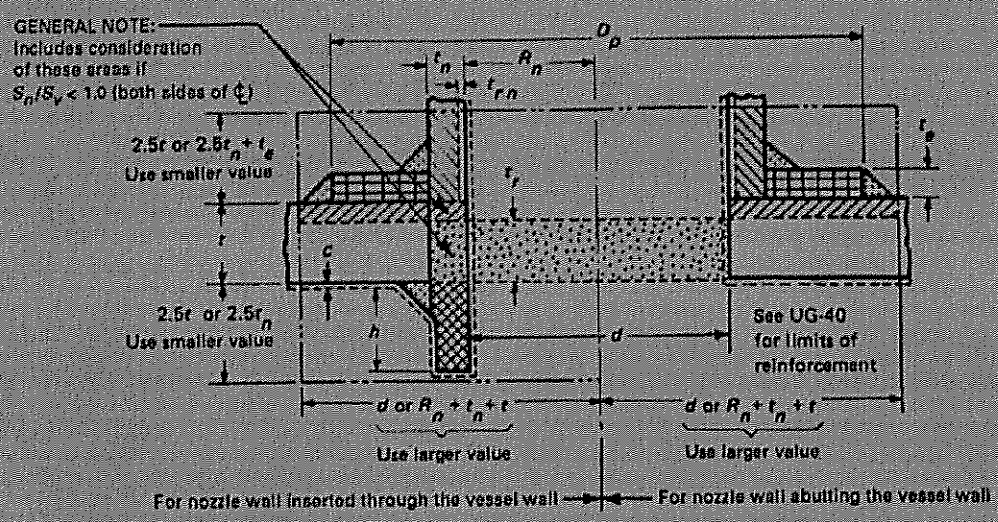

Without Reinforcing Element

= $A = d\,t_r\,F + 2t_n\,t_r\,F(1 - f_{r1})$	Area required
= $A_1 \begin{cases} = d(E_1 t - F t_r) - 2t_n\,(E_1 t - F t_r)\,(1 - f_{r1}) \\ = 2(t + t_n)(E_1 t - F t_r) - 2t_n\,(E_1 t - F t_r)\,(1 - f_{r1}) \end{cases}$	Area available in shell; use larger value
= $A_2 \begin{cases} = 5(t_n - t_{rn})\,f_{r2}\,t \\ = 5(t_n - t_{rn})\,f_{r2}\,t_n \end{cases}$	Area available in nozzle projecting outward; use smaller value
= $A_3 = 2(t_n - c)\,f_{r2}\,h$	Area available in inward nozzle
= A_{41} = outward nozzle weld = $(\text{leg})^2 f_{r2}$	Area available in outward weld
= A_{43} = inward nozzle weld = $(\text{leg})^2 f_{r2}$	Area available in inward weld
If $A_1 + A_2 + A_3 + A_{41} + A_{43} > A$	Opening is adequately reinforced
If $A_1 + A_2 + A_3 + A_{41} + A_{43} < A$	Opening is not adequately reinforced so reinforcing elements must be added and/or thicknesses must be increased

With Reinforcing Element Added

A = same as A, above	Area required
A_1 = same as A_1, above	Area available
$A_2 \begin{cases} = 5(t_n - t_{rn})f_{r2}t \\ = 2(t_n - t_{rn})\,(2.5t_n + t_e)\,f_{r2} \end{cases}$	Area available in nozzle projecting outward; use smaller area
A_3 = same as A_3, above	Area available in inward nozzle
= A_{41} = outward nozzle weld = $(\text{leg})^2 f_{r3}$	Area available in outward weld
= A_{42} = outer element weld = $(\text{leg})^2 f_{r4}$	Area available in outer weld
= A_{43} = inward nozzle weld = $(\text{leg})^2 f_{r2}$	Area available in inward weld
= $A_5 = (D_p - d - 2t_n)\,t_e\,f_{r4}$ [Note (1)]	Area available in element
If $A_1 + A_2 + A_3 + A_{41} + A_{42} + A_{43} + A_5 > A$	Opening is adequately reinforced

NOTE:
(1) This formula is applicable for a rectangular cross-sectional element that falls within the limits of reinforcement.

FIG. UG-37.1 NOMENCLATURE AND FORMULAS FOR REINFORCED OPENINGS
(This Figure Illustrates a Common Nozzle Configuration and Is Not Intended to Prohibit Other Configurations Permitted by the Code.)

```
(*Opening reinforcement calculations*)
(* Detector pipe to shell wall*)
(* A3 = 0, A5 = 0, A42 = 0 *)

(* Sch 80 Pipe, 3 " Ø *)
Tx = 2.875 (*OD*)
d = 2.323 (*ID min*)
tn = (Tx - d) / 2 (*nozzel wall thickness*)
te = 1.25 * tn (*weld leg height*)
```

Out[445]= 2.875

Out[446]= 2.323

Out[447]= 0.276

Out[448]= 0.345

```
In[473]:= F = 1 (*correction factor*)
          tr = 0.335815 (*minimum shell thickness, Vessel_stress2.nb*)
          fr1 = 1 (*strength reducton factor*)
          t = 0.5 (*shell wall thickness*)
          E1 = 1 (*joint efficiency*)
          A = d tr F + 2 tn tr F (1 - fr1)
           A1a = d (E1 t - F tr) - 2 tn (E1 t - F tr) (1 - fr1)
           A1b = 2 (t + tn) (E1 t - F tr) - 2 tn (E1 t - F tr) (1 - fr1)
            If[A1a > A1b, A1 = A1a, A1 = A1b]
```

Out[473]= 1

Out[474]= 0.335815

Out[475]= 1

Out[476]= 0.5

Out[477]= 1

Out[478]= 0.780098

Out[479]= 0.381402

Out[480]= 0.254815

Out[481]= 0.381402

```
In[482]:= fr2 = 1 (*strength reducton factor*)
          trn = 0.10230807 (*requierd nozzel thickness, Xe_vessel _det.nb*)
          A2a = 5 (tn - trn) fr2 t
          A2b = 5 (tn - trn) fr2 tn
          If[A2a < A2b, A2 = A2a, A2 = A2b]

Out[482]= 1

Out[483]= 0.10230807

Out[484]= 0.43423

Out[485]= 0.239695

Out[486]= 0.239695
```

$$\mathbf{fr3 = 1\ (*strength\ reducton\ factor*)}$$
$$\mathbf{A43 = te^2\ fr3}$$
$$\mathbf{A41 = \frac{te^2\ fr3}{2}\ (*\ 1/2\ the\ area,\ skip\ weld\ on\ outside*)}$$

```
Out[492]= 1

Out[493]= 0.119025

Out[494]= 0.0595125

In[498]:= (A1 + A2 + A43 + A41)
          A
          (A1 + A2 + A43 + A41) >= A
          (*If actual area > area required, then no additional reinforcement required *)

Out[498]= 0.799634

Out[499]= 0.780098

Out[500]= True
```

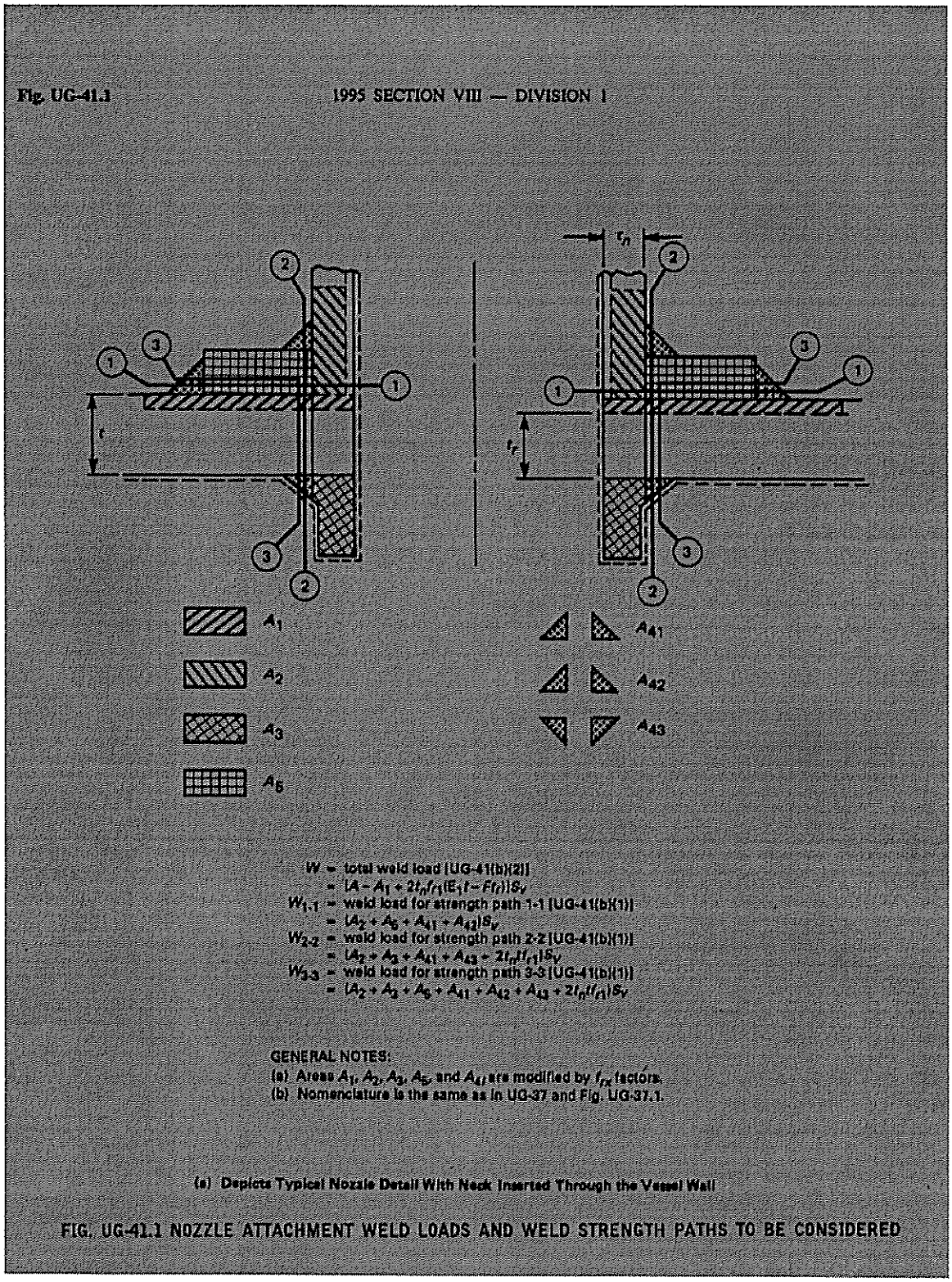


```
(*must run "detector_shell.nb" file first to save variables defined below
  into memory*)
```

```
In[523]:= (*Load / Stress  Carried by Welds*)
          A
          A1
          A2
          A3 = 0
          A5 = 0
          A41
          A42 = 0
          A43

Out[523]= 0.780098

Out[524]= 0.381402

Out[525]= 0.239695

Out[526]= 0

Out[527]= 0

Out[528]= 0.0595125

Out[529]= 0

Out[530]= 0.119025

In[533]:= Sv = 16700 (* allowable stress*)
          W = (A - A1 + 2 tn fr1 (E1 t - F tr)) Sv

Out[533]= 16700

Out[534]= 8171.75

In[535]:=
          W1-1 = (A2 + A5 + A41 + A42) Sv

Out[535]= 4996.76

In[536]:= W2-2 = (A2 + A3 + A41 + A43 + 2 tn t fr1) Sv

Out[536]= 11593.7

In[537]:=
          W3-3 = (A2 + A3 + A5 + A41 + A42 + A43 + 2 tn t fr1) Sv

Out[537]= 11593.7

        (* W (total weld load) << W1-1, W2-2, W3-3, (weld load available)*)

In[539]:= (*Allowable Unit Stresses*)
          (*Fillet Weld Shear, UW 15 c*)
          σfw = 0.49 (Sv)

Out[539]= 8183.
```

In[540]:= (*Nozzel Wall Shear, UG 45 c*)

$\sigma_{nw} = 0.7\ (Sv)$

Out[540]= 11690.

In[541]:=

(*Strength of Connection Elements*)

(*Fillet Weld Shear*)

$$W_{fw} = \frac{\pi}{2}\ Tx\ te\ \sigma_{fw}$$

Out[541]= 12749.4

In[542]:=

(*Strength of Connection Elements*)

(*Nozzel Wall Shear*)

$$W_{nw} = \frac{\pi}{2}\ \frac{(Tx + d)}{2}\ tn\ \sigma_{nw}$$

Out[542]= 13171.9

In[543]:=

$WS_{1\text{-}1} = W_{nw}$

$WS_{2\text{-}2} = W_{fw}$

Out[543]= 13171.9

Out[544]= 12749.4

(*All Paths $WS_{1\text{-}1}$, $WS_{2\text{-}2}$, are stronger than the required strength W*)

```
(*Xenon Pressure Vessel Stress Calculations — VCR Port*)
```

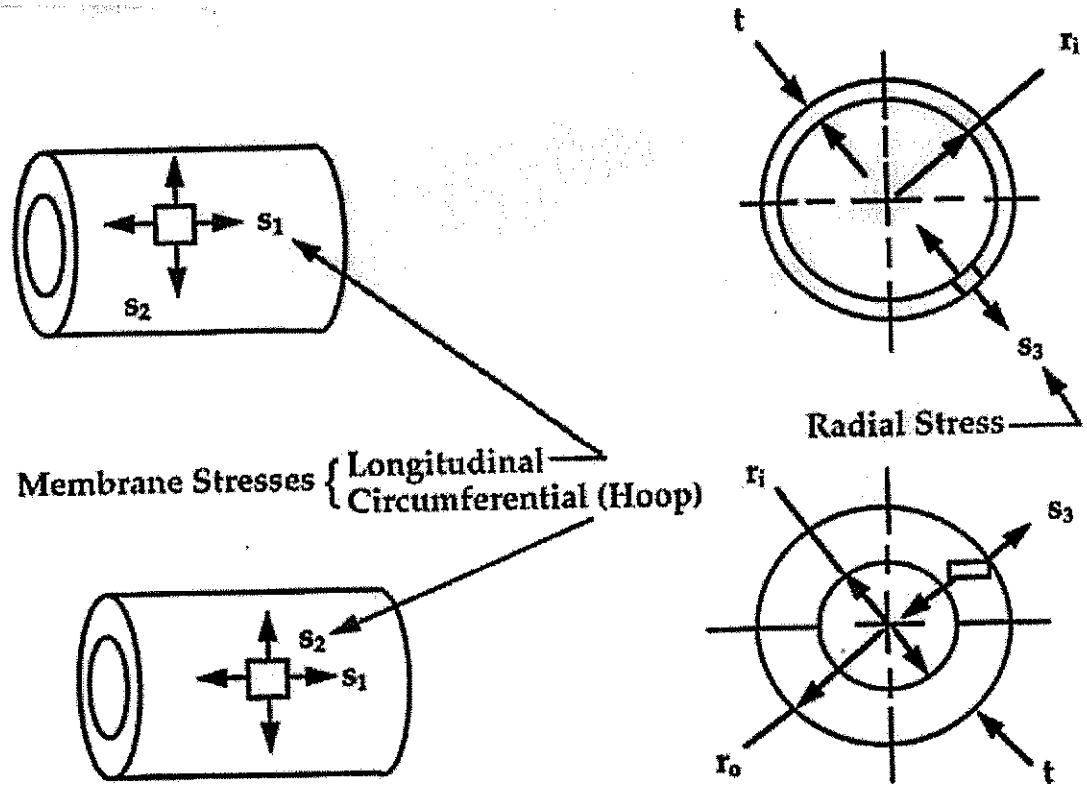

In[545]:=

```
MAWP = 978
σa = 16700 (*allowable stress for 316 L SST*)
σy = 37000
Ri = 0.40 / 2.
Ro = 0.5 / 2.
t = Ro - Ri
Ratio = Ro/Ri
If [1.1 < Ratio < 1.5, medium wall]
If [Ratio < 1.1, thin wall]
If [Ratio > 1.5, thick wall]
```

Out[545]= 978

Out[546]= 16700

Out[547]= 37000

Out[548]= 0.2

Out[549]= 0.25

Out[550]= 0.05

Out[551]= 1.25

Out[552]= medium wall

In[555]:=

```
(*Longitudinal Stress, S1*)
```

$$S_1 = \frac{(\text{MAWP } R_i^2)}{(R_o^2 - R_i^2)}$$

```
(*Circumferential Stress, S2*)
```

$$S_2 = \frac{\text{MAWP } (R_o^2 + R_i^2)}{(R_o^2 - R_i^2)}$$

```
(*Radial Stress, S3*)
```

$$S_3 = -\text{MAWP}$$

```
(*Von Mises Stress*)
```

$$\sigma_m = \sqrt{0.5\ ((S_1 - S_2)^2 + (S_2 - S_3)^2 + (S_3 - S_1)^2)}$$

Out[555]= 1738.67

Out[556]= 4455.33

Out[557]= -978

Out[558]= 4705.4

In[73]:=

```
(*wall thickness, in., max. pressure, psi*)

(*Circumferential Stress: wall thickness, in., max. pressure, psi*)
```

$E_f = 1.0$ (*efficiency*)

$$t_c = \frac{(\text{MAWP}\, R_i)}{(\sigma_a E_f - 0.6\, \text{MAWP})} \quad (*\text{UG27 c 1}*)$$

$$P_c = \frac{(\sigma_a E_f\, t)}{(R_i + 0.6\, t)} \quad (*\text{UG27 c 1}*)$$

$$SF_{uc} = \frac{P_c}{\text{MAWP}} \quad (*\ P_c \text{ uses allowable stress so SF ~5 is also inlcluded}*)$$

```
(*Longitudinal Stress: wall thickness, in., max. pressure, psi*)
(*Circumferential butt welds connecting
  ellipsoidal head and hub to cylinder are Catagory A, Type 1 welds*)
```

$E_f = 1.0$ (*efficincy*)

$$t_1 = \frac{(\text{MAWP}\, R_i)}{(2\, \sigma_a E_f + 0.4\, \text{MAWP})} \quad (*\text{UG27 c 2}*)$$

$$P_1 = \frac{(2\, \sigma_a E_f\, t)}{(R_i - 0.4\, t)} \quad (*\text{UG27 c 2}*)$$

$$SF_{u1} = \frac{P_1}{\text{MAWP}} \quad (*\ P_1 \text{ uses allowable stress so SF ~5 is also inlcluded}*)$$

```
If[Pc < P1, "circumferential stress applies", "longitudinal stress applies"]
If[tc > t1, "circumferential stress applies", "longitudinal stress applies"]
```

Out[73]= 1.

Out[74]= 0.0121391

Out[75]= 3630.43

Out[76]= 3.7121

Out[77]= 1.

Out[78]= 0.00578849

Out[79]= 9277.78

Out[80]= 9.48648

Out[81]= circumferential stress applies

Out[82]= circumferential stress applies

In[569]:=

```
(*Check of Von Mises stress at 1.5 x MAWP for pressure test*)
MAWP = 1.5 x 978

(*Longitudinal Stress, S1*)
```

$$S_1 = \frac{(\text{MAWP } R_i^2)}{(R_o^2 - R_i^2)}$$

```
(*Circumferential Stress, S2*)
```

$$S_2 = \frac{\text{MAWP } (R_o^2 + R_i^2)}{(R_o^2 - R_i^2)}$$

```
(*Radial Stress, S3*)
```

$$S_3 = -\text{MAWP}$$

```
(*Von Mises Stress*)
```

$$\sigma_m = \sqrt{0.5\ ((S_1 - S_2)^2 + (S_2 - S_3)^2 + (S_3 - S_1)^2)}$$

$$N_r = \frac{\sigma_y}{\sigma_m}$$

```
If[Nr > 1, "vessel OK at 1.5 x MAWP during pressure test"]
```

Out[569]= 1467.

Out[570]= 2608.

Out[571]= 6683.

Out[572]= -1467.

Out[573]= 7058.11

Out[574]= 5.2422

Out[575]= vessel OK at 1.5 x MAWP during pressure test

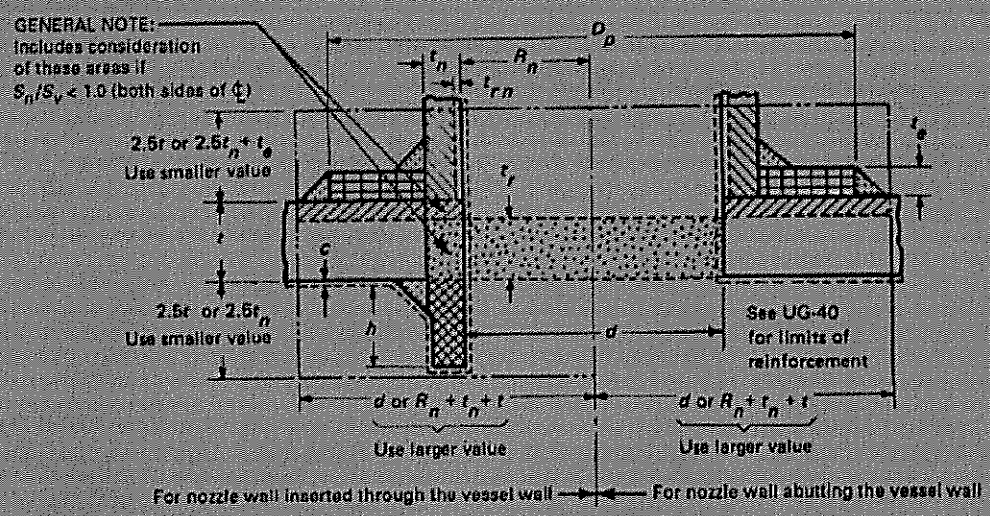

Without Reinforcing Element

= $A = d\,t_r F + 2t_n\,t_r F(1 - f_{r1})$	Area required
= $A_1 \begin{cases} = d(E_1 t - F t_r) - 2t_n(E_1 t - F t_r)(1 - f_{r1}) \\ = 2(t + t_n)(E_1 t - F t_r) - 2t_n(E_1 t - F t_r)(1 - f_{r1}) \end{cases}$	Area available in shell; use larger value
= $A_2 \begin{cases} = 5(t_n - t_{rn})\,f_{r2} t \\ = 5(t_n - t_{rn})\,f_{r2} t_n \end{cases}$	Area available in nozzle projecting outward; use smaller value
= $A_3 = 2(t_n - c)\,f_{r2} h$	Area available in inward nozzle
= A_{41} = outward nozzle weld = $(\text{leg})^2 f_{r2}$	Area available in outward weld
= A_{43} = inward nozzle weld = $(\text{leg})^2 f_{r2}$	Area available in inward weld
If $A_1 + A_2 + A_3 + A_{41} + A_{43} > A$	Opening is adequately reinforced
If $A_1 + A_2 + A_3 + A_{41} + A_{43} < A$	Opening is not adequately reinforced so reinforcing elements must be added and/or thicknesses must be increased

With Reinforcing Element Added

A = same as A, above	Area required
A_1 = same as A_1, above	Area available
$A_2 \begin{cases} = 5(t_n - t_{rn}) f_{r2} t \\ = 2(t_n - t_{rn})(2.5t_n + t_e) f_{r2} \end{cases}$	Area available in nozzle projecting outward; use smaller area
A_3 = same as A_3, above	Area available in inward nozzle
= A_{41} = outward nozzle weld = $(\text{leg})^2 f_{r3}$	Area available in outward weld
= A_{42} = outer element weld = $(\text{leg})^2 f_{r4}$	Area available in outer weld
= A_{43} = inward nozzle weld = $(\text{leg})^2 f_{r2}$	Area available in inward weld
= $A_5 = (D_p - d - 2t_n)\,t_e\,f_{r4}$ [Note (1)]	Area available in element
If $A_1 + A_2 + A_3 + A_{41} + A_{42} + A_{43} + A_5 > A$	Opening is adequately reinforced

NOTE:
(1) This formula is applicable for a rectangular cross-sectional element that falls within the limits of reinforcement.

FIG. UG-37.1 NOMENCLATURE AND FORMULAS FOR REINFORCED OPENINGS
(This Figure Illustrates a Common Nozzle Configuration and Is Not Intended to Prohibit Other Configurations Permitted by the Code.)

```
In[576]:= (* Opening Reinforcement Calculations*)
          (* VCR Gland to shell wall*)
          (* A3 = 0, A5 = 0, A43 = 0, A42 = 0 *)

          (* VCR, 0.5 " Ø *)
          Tx = .5 (*OD*)
          d = 0.40 (*ID min*)
          tn = (Tx - d) / 2 (*nozzel wall thickness*)
          te = 1.25 * tn (*weld leg height*)

Out[576]= 0.5

Out[577]= 0.4

Out[578]= 0.05

Out[579]= 0.0625

In[580]:= F = 1 (*correction factor*)
          tr = 0.335815 (*minimum shell thickness, Vessel_stress2.nb*)
          fr1 = 1 (*strength reducton factor*)
          t = 0.5 (*shell wall thickness*)
          E1 = 1 (*joint efficiency*)
          A = d tr F + 2 tn tr F (1 - fr1)
           A1a = d (E1 t - F tr) - 2 tn (E1 t - F tr) (1 - fr1)
           A1b = 2 (t + tn) (E1 t - F tr) - 2 tn (E1 t - F tr) (1 - fr1)
            If[A1a > A1b, A1 = A1a, A1 = A1b]

Out[580]= 1

Out[581]= 0.335815

Out[582]= 1

Out[583]= 0.5

Out[584]= 1

Out[585]= 0.134326

Out[586]= 0.065674

Out[587]= 0.180604

Out[588]= 0.180604
```

```
In[589]:= fr2 = 1 (*strength reducton factor*)
          trn = 0.0121391(*required nozzel thickness, Xe_vessel_VCR.nb*)
          A2a = 5 (tn - trn) fr2 t
          A2b = 5 (tn - trn) fr2 tn
          If[A2a < A2b, A2 = A2a, A2 = A2b]

Out[589]= 1

Out[590]= 0.0121391

Out[591]= 0.0946522

Out[592]= 0.00946522

Out[593]= 0.00946522

In[594]:= fr3 = 1 (*strength reducton factor*)
          A43 = te^2 fr3

Out[594]= 1

Out[595]= 0.00390625

In[596]:= (A1 + A2 + A43)
          A
          (A1 + A2 + A43) >= A
          (*If actual area > area required, then no additional reinforcement required *)

Out[596]= 0.193975

Out[597]= 0.134326

Out[598]= True
```

Fig. UG-41.1 1995 SECTION VIII — DIVISION 1

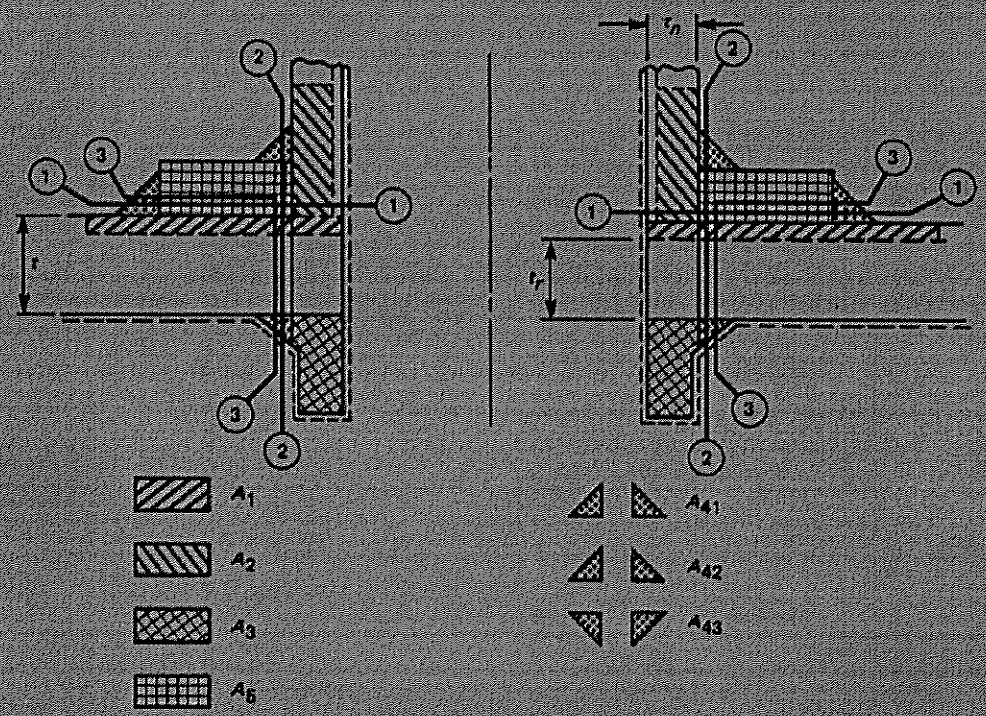

W = total weld load [UG-41(b)(2)]
= $[A - A_1 + 2t_n f_{r1}(E_1 t - Ft_r)]S_v$
$W_{1\text{-}1}$ = weld load for strength path 1-1 [UG-41(b)(1)]
= $[A_2 + A_5 + A_{41} + A_{42}]S_v$
$W_{2\text{-}2}$ = weld load for strength path 2-2 [UG-41(b)(1)]
= $[A_3 + A_5 + A_{41} + A_{43} + 2t_n t f_{r1}]S_v$
$W_{3\text{-}3}$ = weld load for strength path 3-3 [UG-41(b)(1)]
= $[A_2 + A_3 + A_5 + A_{41} + A_{42} + A_{43} + 2t_n t f_{r1}]S_v$

GENERAL NOTES:
(a) Areas A_1, A_2, A_3, A_5, and A_{41} are modified by f_{rx} factors.
(b) Nomenclature is the same as in UG-37 and Fig. UG-37.1.

(a) Depicts Typical Nozzle Detail With Neck Inserted Through the Vessel Wall

FIG. UG-41.1 NOZZLE ATTACHMENT WELD LOADS AND WELD STRENGTH PATHS TO BE CONSIDERED

```
(*must run "VCR_shell.nb" file first to save variables defined below into memory*)
```

```
In[599]:= (*Load / Stress  Carried by Welds*)
          A
          A1
          A2
          A3 = 0
          A5 = 0
          A41 = 0
          A42 = 0
          A43

Out[599]= 0.134326

Out[600]= 0.180604

Out[601]= 0.00946522

Out[602]= 0

Out[603]= 0

Out[604]= 0

Out[605]= 0

Out[606]= 0.00390625

In[607]:= Sv = 16700
          W = (A - A1 + 2 tn fr1 (E1 t - F tr)) Sv

Out[607]= 16700

Out[608]= -498.645

In[610]:=
          W1-1 = (A2 + A5 + A41 + A42) Sv

Out[610]= 158.069

In[611]:= W2-2 = (A2 + A3 + A41 + A43 + 2 tn t fr1) Sv

Out[611]= 1058.3

In[612]:= W3-3 = (A2 + A3 + A5 + A41 + A42 + A43 + 2 tn t fr1) Sv

Out[612]= 1058.3

       (* W (total weld load) << W1-1, W2-2, W3-3, (weld load available)*)

In[613]:= (*Allowable Unit Stresses*)
          (*Fillet Weld Shear, UW 15 c*)
          σfw = 0.49 (Sv)

Out[613]= 8183.
```

In[614]:= (*Nozzel Wall Shear, UG 45 c*)

$\sigma_{nw} = 0.7\ (Sv)$

Out[614]= 11690.

In[615]:=

(*Strength of Connection Elements*)
(*Fillet Weld Shear*)

$$W_{fw} = \frac{\pi}{2}\ Tx\ te\ \sigma_{fw}$$

Out[615]= 401.682

In[616]:=

(*Strength of Connection Elements*)
(*Nozzel Wall Shear*)

$$W_{nw} = \frac{\pi}{2}\ \frac{(Tx + d)}{2}\ tn\ \sigma_{nw}$$

Out[616]= 413.159

In[617]:=

$WS_{1-1} = W_{nw}$
$WS_{2-2} = W_{fw}$

Out[617]= 413.159

Out[618]= 401.682

(*All Paths WS_{1-1}, WS_{2-2}, are stronger than the required strength W*)

```
(* VCR Port Xe chamber gamma ray feedthru *)
(* 850 psia MOP,
 stainless steel VCR plug with 0.250 " Ø counterbore. Determine head thickness: *)
```

In[24]:=
```
(* Load at operating conditions *)
G = 0.250 (* Diameter, in. at gasket load location *)
P = 850 * 1.15  (* MAWP, internal design pressure *)
H = 0.785 G^2 P (* lb., Total hydrostatic end force *)
```

Out[24]= 0.25

Out[25]= 977.5

Out[26]= 47.9586

In[27]:=

$C_a = 0.75$ (*Head attachment constant, UG-34 (r)*)

$E_f = 1.0$ (*Efficiency Factor *)

$d_{ga} = G$ (*in. hole cross-sectional diameter*)

$\sigma_u = 77000.0$ (*psi, 316 L ultimate strength*)

$\sigma_a = 16700$ (*psi, 316 L allowable strength*)

$th = d_{ga} \sqrt{\frac{C_a \times P}{\sigma_a \times E_f}}$ (* in., required head thickness, no bending moment *)

Out[27]= 0.75

Out[28]= 1.

Out[29]= 0.25

Out[30]= 77000.

Out[31]= 16700

Out[32]= 0.0523806

```
(*Xenon Pressure Vessel Stress Calculations - LN2 Port*)
```

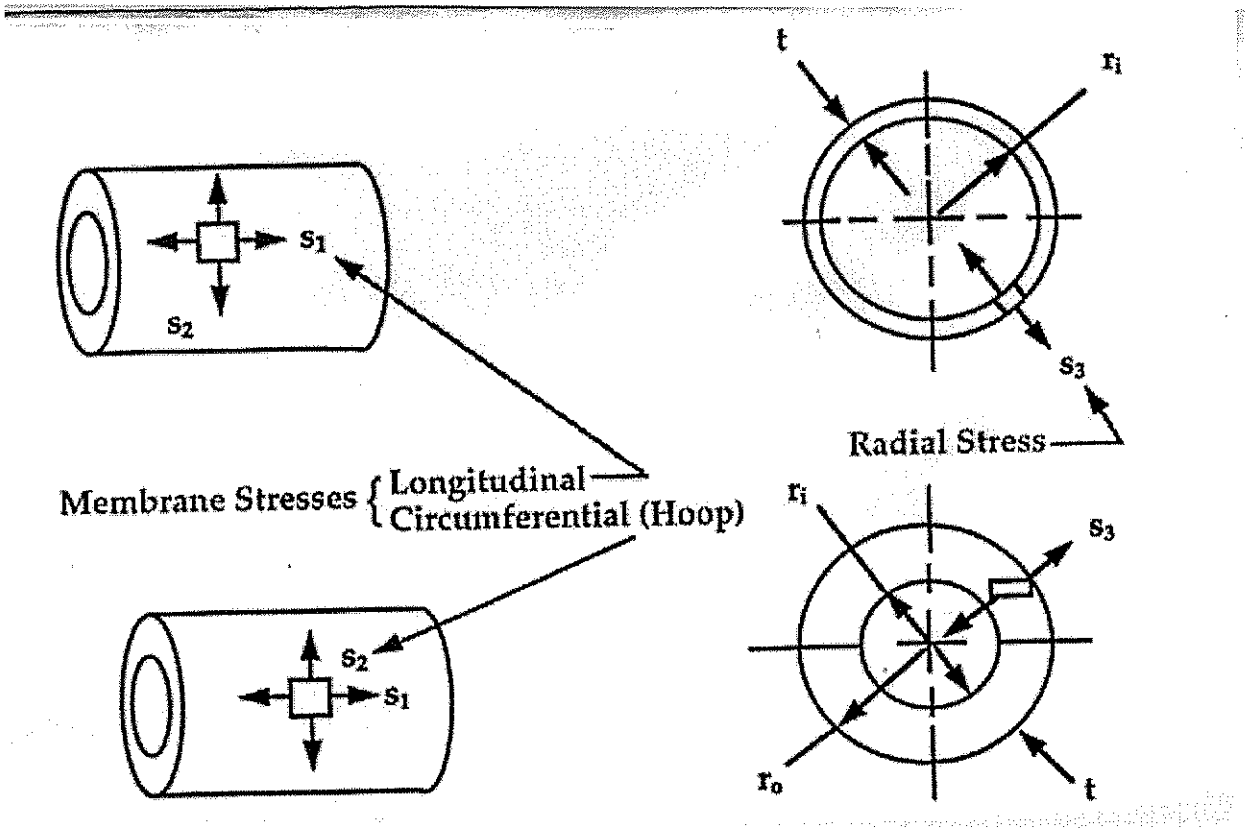

In[619]:=

```
MAWP = 978
σa = 16700 (*allowable stress for 316 L SST*)
σy = 37000
Ri = 1.5 / 2.
Ro = 1.9 / 2.
t = Ro - Ri
Ratio = Ro/Ri
If [1.1 < Ratio < 1.5, medium wall]
If [Ratio < 1.1, thin wall]
If [Ratio > 1.5, thick wall]
```

Out[619]= 978

Out[620]= 16700

Out[621]= 37000

Out[622]= 0.75

Out[623]= 0.95

Out[624]= 0.2

Out[625]= 1.26667

Out[626]= medium wall

In[629]:=

(*Longitudinal Stress, S_1*)

$$S_1 = \frac{(\text{MAWP } R_i^2)}{(R_o^2 - R_i^2)}$$

(*Circumferential Stress, S_2*)

$$S_2 = \frac{\text{MAWP } (R_o^2 + R_i^2)}{(R_o^2 - R_i^2)}$$

(*Radial Stress, S_3*)

$$S_3 = -\text{MAWP}$$

(*Von Mises Stress*)

$$\sigma_m = \sqrt{0.5\ ((S_1 - S_2)^2 + (S_2 - S_3)^2 + (S_3 - S_1)^2)}$$

Out[629]= 1618.01

Out[630]= 4214.03

Out[631]= -978

Out[632]= 4496.43

In[104]:=

```
(*wall thickness, in., max. pressure, psi*)

(*Circumferential Stress: wall thickness, in., max. pressure, psi*)
```

$E_f = 0.7$ (*butt weld efficiency based on no inspection, Table UW-12*)

$$t_c = \frac{(\text{MAWP}\, R_i)}{(\sigma_a E_f - 0.6\, \text{MAWP})} \quad \text{(*UG27 c 1*)}$$

$$P_c = \frac{(\sigma_a E_f\, t)}{(R_i + 0.6\, t)} \quad \text{(*UG27 c 1*)}$$

$$SF_{uc} = \frac{P_c}{\text{MAWP}} \quad \text{(* } P_c \text{ uses allowable stress so SF ~5 is also inlcluded*)}$$

```
(*Longitudinal Stress: wall thickness, in., max. pressure, psi*)
(*Circumferential butt welds connecting
  ellipsoidal head and hub to cylinder are Catagory A, Type 1 welds*)
```

$E_f = 0.7$ (*butt weld efficiency based on no inspection, Table UW-12*)

$$t_l = \frac{(\text{MAWP}\, R_i)}{(2\, \sigma_a E_f + 0.4\, \text{MAWP})} \quad \text{(*UG27 c 2*)}$$

$$P_l = \frac{(2\, \sigma_a E_f\, t)}{(R_i - 0.4\, t)} \quad \text{(*UG27 c 2*)}$$

$$SF_{ul} = \frac{P_l}{\text{MAWP}} \quad \text{(* } P_l \text{ uses allowable stress so SF ~5 is also inlcluded*)}$$

```
If[Pc < Pl, "circumferential stress applies", "longitudinal stress applies"]
If[tc > tl, "circumferential stress applies", "longitudinal stress applies"]
```

Out[104]= 0.7

Out[105]= 0.066062

Out[106]= 2687.36

Out[107]= 2.74781

Out[108]= 0.7

Out[109]= 0.0308567

Out[110]= 6979.1

Out[111]= 7.1361

Out[112]= circumferential stress applies

Out[113]= circumferential stress applies

In[643]:=

```
(*Check of Von Mises stress at 1.5 × MAWP for pressure test*)
MAWP = 1.5 × 978

(*Longitudinal Stress, S1*)
```

$$S_1 = \frac{(\text{MAWP } R_i^2)}{(R_o^2 - R_i^2)}$$

```
(*Circumferential Stress, S2*)
```

$$S_2 = \frac{\text{MAWP } (R_o^2 + R_i^2)}{(R_o^2 - R_i^2)}$$

```
(*Radial Stress, S3*)
```

$$S_3 = -\text{MAWP}$$

```
(*Von Mises Stress*)
```

$$\sigma_m = \sqrt{0.5\ ((S_1 - S_2)^2 + (S_2 - S_3)^2 + (S_3 - S_1)^2)}$$

$$N_r = \frac{\sigma_y}{\sigma_m}$$

```
If[Nr > 1, "vessel OK at 1.5 × MAWP during pressure test"]
```

Out[643]= 1467.

Out[644]= 2427.02

Out[645]= 6321.04

Out[646]= -1467.

Out[647]= 6744.64

Out[648]= 5.48583

Out[649]= vessel OK at 1.5 × MAWP during pressure test

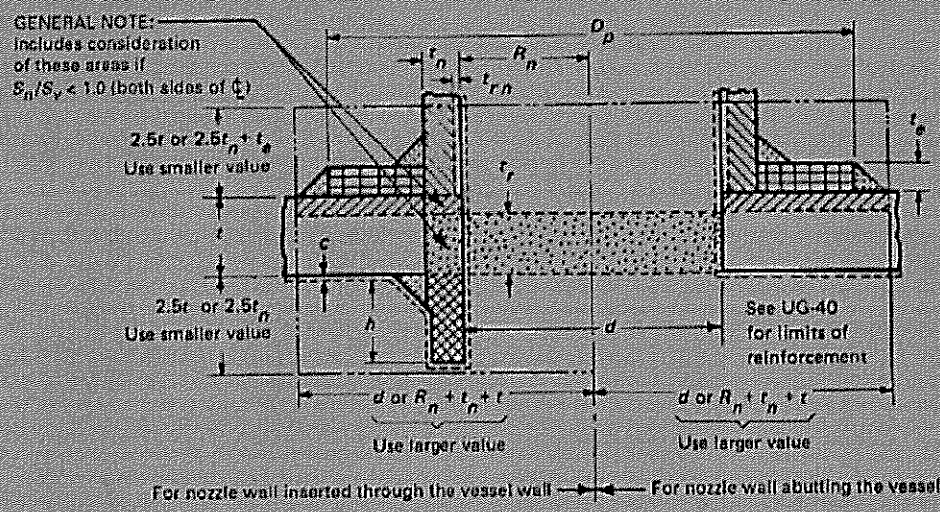

Without Reinforcing Element

= $A = d t_r F + 2t_n t_r F(1 - f_{r1})$	Area required
= $A_1 \begin{cases} = d(E_1 t - F t_r) - 2t_n (E_1 t - F t_r)(1 - f_{r1}) \\ = 2(t + t_n)(E_1 t - F t_r) - 2t_n (E_1 t - F t_r)(1 - f_{r1}) \end{cases}$	Area available in shell; use larger value
= $A_2 \begin{cases} = 5(t_n - t_{rn}) f_{r2} t \\ = 5(t_n - t_{rn}) f_{r2} t_n \end{cases}$	Area available in nozzle projecting outward; use smaller value
= $A_3 = 2(t_n - c) f_{r2} h$	Area available in inward nozzle
= A_{41} = outward nozzle weld = $(\text{leg})^2 f_{r2}$	Area available in outward weld
= A_{43} = inward nozzle weld = $(\text{leg})^2 f_{r2}$	Area available in inward weld
If $A_1 + A_2 + A_3 + A_{41} + A_{43} \geq A$	Opening is adequately reinforced
If $A_1 + A_2 + A_3 + A_{41} + A_{43} < A$	Opening is not adequately reinforced so reinforcing elements must be added and/or thicknesses must be increased

With Reinforcing Element Added

A = same as A_1 above	Area required
A_1 = same as A_1, above	Area available
$A_2 \begin{cases} = 5(t_n - t_{rn}) f_{r2} t \\ = 2(t_n - t_{rn})(2.5t_n + t_e) f_{r2} \end{cases}$	Area available in nozzle projecting outward; use smaller area
A_3 = same as A_3, above	Area available in inward nozzle
= A_{41} = outward nozzle weld = $(\text{leg})^2 f_{r3}$	Area available in outward weld
= A_{42} = outer element weld = $(\text{leg})^2 f_{r4}$	Area available in outer weld
= A_{43} = inward nozzle weld = $(\text{leg})^2 f_{r2}$	Area available in inward weld
= $A_5 = (D_p - d - 2t_n) t_p f_{r4}$ (Note (1))	Area available in element
If $A_1 + A_2 + A_3 + A_{41} + A_{42} + A_{43} + A_5 \geq A$	Opening is adequately reinforced

NOTE:
(1) This formula is applicable for a rectangular cross-sectional element that falls within the limits of reinforcement.

FIG. UG-37.1 NOMENCLATURE AND FORMULAS FOR REINFORCED OPENINGS
(This Figure Illustrates a Common Nozzle Configuration and Is Not Intended to Prohibit Other Configurations Permitted by the Code.)

```
In[4]:= (* Opening Reinforcement Calculations*)
        (* LN2 Trap to shell wall*)
        (* A3 = 0, A5 = 0, A42 = 0 *)

        (* Pipe Sch. 80 1.5 " Ø *)
        Tx = 1.9 (*OD*)
        d = 1.5 (*ID min*)
        tn = (Tx - d) / 2 (*nozzel wall thickness*)
        te = 1.25 * tn (*weld leg height*)

Out[4]= 1.9

Out[5]= 1.5

Out[6]= 0.2

Out[7]= 0.25

In[8]:= F = 1 (*correction factor*)
        tr = 0.335815 (*minimum shell thickness, Vessel_stress2.nb*)
        fr1 = 1 (*strength reducton factor*)
        t = 0.5 (*shell wall thickness*)
        E1 = 1 (*joint efficiency*)
        A = d tr F + 2 tn tr F (1 - fr1)
         A1a = d (E1 t - F tr) - 2 tn (E1 t - F tr) (1 - fr1)
         A1b = 2 (t + tn) (E1 t - F tr) - 2 tn (E1 t - F tr) (1 - fr1)
          If[A1a > A1b, A1 = A1a, A1 = A1b]

Out[8]= 1

Out[9]= 0.335815

Out[10]= 1

Out[11]= 0.5

Out[12]= 1

Out[13]= 0.503722

Out[14]= 0.246278

Out[15]= 0.229859

Out[16]= 0.246278
```

```
In[17]:= fr2 = 1 (*strength reducton factor*)
         trn = 0.066062 (*required nozzel thickness, Xe_vessel _LN2.nb*)
         A2a = 5 (tn - trn) fr2 t
         A2b = 5 (tn - trn) fr2 tn
         If[A2a < A2b, A2 = A2a, A2 = A2b]

Out[17]= 1

Out[18]= 0.066062

Out[19]= 0.334845

Out[20]= 0.133938

Out[21]= 0.133938

In[72]:= fr3 = 1 (*strength reducton factor*)
         A43 = te^2 fr3
         te_o = 1.4 tn
         A41 = te_o^2 fr3 / 1.2 (* 80 % the area, skip weld on outside*)

Out[72]= 1

Out[73]= 0.0625

Out[74]= 0.28

Out[75]= 0.0653333

In[76]:= (A1 + A2 + A43 + A41)
         A
         (A1 + A2 + A43 + A41) >= A
         (*If actual area > area required, then no additional reinforcement required *)

Out[76]= 0.508049

Out[77]= 0.503722

Out[78]= True
```

Fig. UG-41.1 1995 SECTION VIII — DIVISION 1

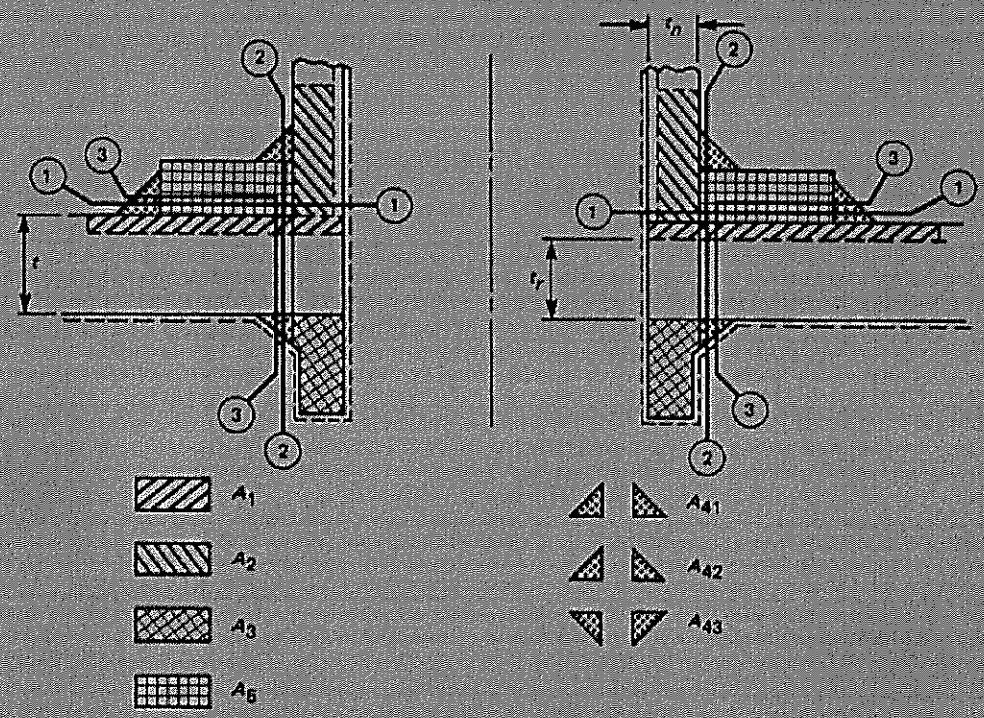

W = total weld load [UG-41(b)(2)]
= $[A - A_1 + 2t_n f_{r1}(E_1 t - F t_r)]S_v$
$W_{1\text{-}1}$ = weld load for strength path 1-1 [UG-41(b)(1)]
= $[A_2 + A_5 + A_{41} + A_{42}]S_v$
$W_{2\text{-}2}$ = weld load for strength path 2-2 [UG-41(b)(1)]
= $[A_2 + A_3 + A_{41} + A_{43} + 2t_n t f_{r1}]S_v$
$W_{3\text{-}3}$ = weld load for strength path 3-3 [UG-41(b)(1)]
= $[A_2 + A_3 + A_5 + A_{41} + A_{42} + A_{43} + 2t_n t f_{r1}]S_v$

GENERAL NOTES:
(a) Areas A_1, A_2, A_3, A_5 and A_{41} are modified by f_{rv} factors.
(b) Nomenclature is the same as in UG-37 and Fig. UG-37.1.

(a) Depicts Typical Nozzle Detail With Neck Inserted Through the Vessel Wall

FIG. UG-41.1 NOZZLE ATTACHMENT WELD LOADS AND WELD STRENGTH PATHS TO BE CONSIDERED

```
(*must run "LN2_shell.nb" file first to save variables defined below into memory*)
```

```
In[79]:= (*Load / Stress  Carried by Welds*)
         A
         A1
         A2
         A3 = 0
         A5 = 0
         A41
         A42 = 0
         A43

Out[79]= 0.503722

Out[80]= 0.246278

Out[81]= 0.133938

Out[82]= 0

Out[83]= 0

Out[84]= 0.0653333

Out[85]= 0

Out[86]= 0.0625

In[87]:= Sv = 16700
         W = (A - A1 + 2 tn fr1 (E1 t - F tr)) Sv

Out[87]= 16700

Out[88]= 5396.09

In[89]:=
         W1-1 = (A2 + A5 + A41 + A42) Sv

Out[89]= 3327.83

In[90]:= W2-2 = (A2 + A3 + A41 + A43 + 2 tn t fr1) Sv

Out[90]= 7711.58

         W3-3 = (A2 + A3 + A5 + A41 + A42 + A43 + 2 tn t fr1) Sv

         7664.26

         (* W (total weld load) << W1-1, W2-2, W3-3, (weld load available)*)

In[91]:= (*Allowable Unit Stresses*)
         (*Fillet Weld Shear, UW 15 c*)
         σfw = 0.49 (Sv)

Out[91]= 8183.
```

In[92]:= (*Nozzel Wall Shear, UG 45 c*)

$\sigma_{nw} = 0.7\ (Sv)$

Out[92]= 11690.

In[93]:=

(*Strength of Connection Elements*)
(*Fillet Weld Shear*)

$$W_{fw} = \frac{\pi}{2}\ Tx\ te\ \sigma_{fw}$$

Out[93]= 6105.57

In[94]:=

(*Strength of Connection Elements*)
(*Nozzel Wall Shear*)

$$W_{nw} = \frac{\pi}{2}\ \frac{(Tx + d)}{2}\ tn\ \sigma_{nw}$$

Out[94]= 6243.29

In[95]:=

$WS_{1\text{-}1} = W_{nw}$
$WS_{2\text{-}2} = W_{fw}$

Out[95]= 6243.29

Out[96]= 6105.57

(*All Paths $WS_{1\text{-}1}$, $WS_{2\text{-}2}$, are stronger than the required strength W*)

```
(* Stress Concentration Factor for mini-conflat openings in head. Reference: Wiley *)
```

Stress Concentration Factors

Table 4
Maximum K_t for circular plate with circular holes with internal pressure only

	Pattern	Spacing	Maximum K_t	Location	Reference
1	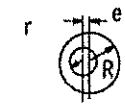	$r/R = 0.5$	See Fig. 126	See Fig. 126	223,228,229
2	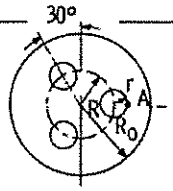	$R/R_0 = 0.5$ $r/R_0 = 0.2$	See Fig. 127	See Fig. 127	230
3	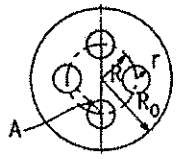	$R/R_0 = 0.5$ $r/R_0 = 0.2$	See Fig. 127	See Fig. 127	230
		$R/R_0 = 0.5$ $r/R_0 = 0.25$	2.45	A	223
4	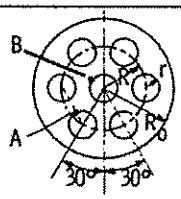	$R/R_0 = 0.6$ $r/R_0 = 0.2$	2.278 Pressure in All Holes 1.521 Pressure in Center Hole Only	A B	223

```
In[1039]:= (*must run "Flange stress_hub_403.nb"
             file first to save variables defined below into memory*)

           (* Assumptions:Chamber head design has 5 mini-conflat holes,not 6,
            Kt will be conservative. Chamber head has 1.5 " diameter inner hole, #4 model has
             equal diameter holes throughout,  Kt will not be conservative. Assume
             these 2 opposites have a cancelling effect and given Kt is valid. Actual BC hole
             radius is 0.3125 ". But, for this analysis assume all holes 0.75" radius *)

           Ro = 5.25 (*in.,Flange outside radius*)
           rh = 0.750  (*in.,BC hole radius*)
           Ri = 0.750 (*in.,inner hole radius*)
           R = 5.5 / 2 (* in., mini conflat bolt circle radius *)
           l = Ri/Ro (*graph constant*)
           m = R/Ro (*graph constant*)
           o = rh/Ro (*graph constant*)

Out[1039]= 5.25

Out[1040]= 0.75

Out[1041]= 0.75

Out[1042]= 2.75

Out[1043]= 0.142857

Out[1044]= 0.52381

Out[1045]= 0.142857

In[1256]:= (* R/Ro and rh/Ro are slightly less than #4 model,
            but Kt will be less (conservative) for chamber head design.*)
            Kt = 2.278

Out[1256]= 2.278
```

In[1257]:=

```
Ce = 0.3    (*flange attachment constant*)
p = 350 × 1.15  (*psi, MAWP*)
Ef = 1.0    (*Efficiency Factor *)
dga = 8.54  (*in. gasket diameter*)
Wm1
(* lb., Must run "Flange stress_hub_403.nb" to
  define this variable. Minimum required bolt load, for operating *)
hG = 0.520 (* in., Must run
  "Flange stress_hub_403.nb" to define this variable.Bending moment length *)
σu = 77000.0 (*psi, 316 L ultimate strength*)
σa = 16700/Kt   (*psi, 316 L allowable strength*)
```

Out[1257]= 0.3

Out[1258]= 402.5

Out[1259]= 1.

Out[1260]= 8.54

Out[1261]= 24677.2

Out[1262]= 0.52

Out[1263]= 77000.

Out[1264]= 7330.99

In[1265]:= $t_h = d_{ga}\sqrt{\frac{(C_e * p)}{(\sigma_a * E_f)} + \frac{(1.9 * W_{m1} * h_G)}{(\sigma_a * E_f * d_{ga}{}^3)}}$ (* in., required flange thickness *)

Out[1265]= 1.26123

In[1266]:= If[t_h < 1.5, "flange thickness is OK", "flange thickness is NOT OK"]

Out[1266]= flange thickness is OK

In[1565]:=

```
(* Maximum distance between
  hole centers for a cluster of holes in head, UG-36 (3) (d)*)
(* No two unreinforced openings shall have their centers closer than: *)
R
```

$$d_{betweenholes1} = \mathrm{Sin}\left[36 \times \frac{\pi}{180}\right] \times R \times 2$$

$$d_2 = 0.625$$

$$d_1 = d_2 \quad \text{(* diameter of holes *)}$$

$$C_d = 2.5\,(d_1 + d_2)$$

```
If[d_betweenholes1 > C_d,
 "distance between 5.5 BC holes OK", "distance between 5.5 BC holes NOT OK"]
```

$$d_{betweenholes2} = R - .75 - .3125$$

$$d_2 = 0.625$$

$$d_1 = 1.500$$

$$C_d = 2.5\,(d_1 + d_2)$$

```
If[d_betweenholes2 > C_d, "distance between center hole and 5.5 BC holes OK", "distance
   between center hole and 5.5 BC holes NOT OK,,,,, use alternative UG-39(d)"]
```

$$d_{betweenholes2} < 2\left(\frac{(d_1 + d_2)}{2}\right)$$

$$d_{betweenholes2} > 1.25\left(\frac{(d_1 + d_2)}{2}\right)$$

```
(* in., required flange thickness,
 UG-39 (e) (1) (2), using alternative to Area reinforcment of UG39 (b) (1) *)
```

$$\sigma_a = 16700$$

$$ef = \frac{R - \left(\frac{(d_1 + d_2)}{2}\right)}{R} \quad \text{(* UG39 (e) (2) *)}$$

$$fs = \sqrt{0.5 / ef}$$

$$t_h = d_{ga}\sqrt{fs \times 2\left(\frac{(C_e * p)}{(\sigma_a * E_f)} + \frac{(1.9 * W_{m1} * h_G)}{(\sigma_a * E_f * d_{ga}{}^3)}\right)}$$

Out[1565]= 2.75

Out[1566]= 3.23282

Out[1567]= 0.625

Out[1568]= 0.625

Out[1569]= 3.125

Out[1570]= distance between 5.5 BC holes OK

Out[1571]= 1.6875

```
Out[1572]= 0.625

Out[1573]= 1.5

Out[1574]= 5.3125

Out[1575]= distance between center hole and 5.5 BC holes NOT OK,,,,, use alternative UG-39(d)

Out[1576]= True

Out[1577]= True

Out[1578]= 16700

Out[1579]= 0.613636

Out[1580]= 0.902671

Out[1581]= 1.12279
```

```
Out[1589]= 0.625

Out[1590]= 1.5

Out[1591]= 5.3125

Out[1592]= distance between center hole and 5.5 BC holes NOT OK,,,,, use alternative UG-39(d)

Out[1593]= True

Out[1594]= True

Out[1595]= 16700

Out[1596]= 0.613636

Out[1597]= 0.902671

Out[1598]= 1.24385
```

```
(*must run "Flange stress_hub_978.nb"
  file first to save variables defined below into memory*)

(* Assumptions: Chamber head design has has no holes *)

Ro = 5.25 (*in.,Flange outside radius*)


Ce = 0.3    (*flange attachment constant*)
p = 850 × 1.15  (*psi, MAWP*)
Ef = 1.0    (*Efficiency Factor *)
dga = G  (*in. gasket diameter*)
Wm1
(* lb., Must run "Flange stress_hub_978.nb
  " to define this variable. Minimum required bolt load, for operating *)
hG = 0.520 (* in.,
 Must run "Flange stress_hub_978.nb" to define this variable.Bending moment length *)
σu = 77000.0 (*psi, 316 L ultimate strength*)
σa = 16700   (*psi, 316 L allowable strength*)
```

0.3

977.5

1.

7.98

58849.9

0.52

77000.

16700

$$t_h = d_{ga}\sqrt{\frac{(C_e * p)}{(\sigma_a * E_f)} + \frac{(1.9 * W_{m1} * h_G)}{(\sigma_a * E_f * d_{ga}{}^3)}}$$ (* in., required flange thickness *)

1.2468

```
If[ th < 1.980, "flange thickness is OK", "flange thickness is NOT OK"]
```

flange thickness is OK

```
(* Minimum thickness of plate under gasket (hub) *)
```

$$tg = d_{ga}\sqrt{(1.9 * W_{m1} * h_G) / (\sigma_a * d_{ga}{}^3)}$$ (* UG34, sketch (k) *)

```
If[ tg < 1.980, "flange hub thickness is OK", "flange hub thickness is NOT OK"]
```

0.660529

flange hub thickness is OK

```
(*must run "Flange stress_hub_small_978.nb"
  file first to save variables defined below into memory*)

(* Assumptions: Head design has has no holes *)

Ro = 4.63 / 2 (*in.,Flange outside radius*)


Ce = 0.3    (*flange attachment constant*)
p = 850 × 1.15  (*psi, MAWP*)
Ef = 1.0    (*Efficiency Factor *)
dga = G  (*in. gasket diameter*)
Wm1
(* lb., Must run "Flange stress_hub_small_978.nb
  " to define this variable. Minimum required bolt load, for operating *)
hG = 0.520 (* in., Must run
  "Flange stress_hub_small_978.nb" to define this variable.Bending moment length *)

σa = 16700   (*psi, 304 L allowable strength*)
```

0.3

977.5

1.

3.35

10143.7

0.52

16700

$$t_h = d_{ga}\sqrt{\frac{(C_e * p)}{(\sigma_a * E_f)} + \frac{(1.9 * W_{m1} * h_G)}{(\sigma_a * E_f * d_{ga}{}^3)}}$$ (* in., required flange thickness *)

0.613356

```
If[ th < 0.750, "flange thickness is OK", "flange thickness is NOT OK"]
```

flange thickness is OK

```
(* Minimum thickness of plate under gasket (hub) *)
```

$$tg = d_{ga}\sqrt{(1.9 * W_{m1} * h_G) / (\sigma_a * d_{ga}{}^3)}$$ (* UG34, sketch (k) *)

```
If[ tg < 0.81, "flange hub thickness is OK", "flange hub thickness is NOT OK"]
```

0.423249

flange hub thickness is OK

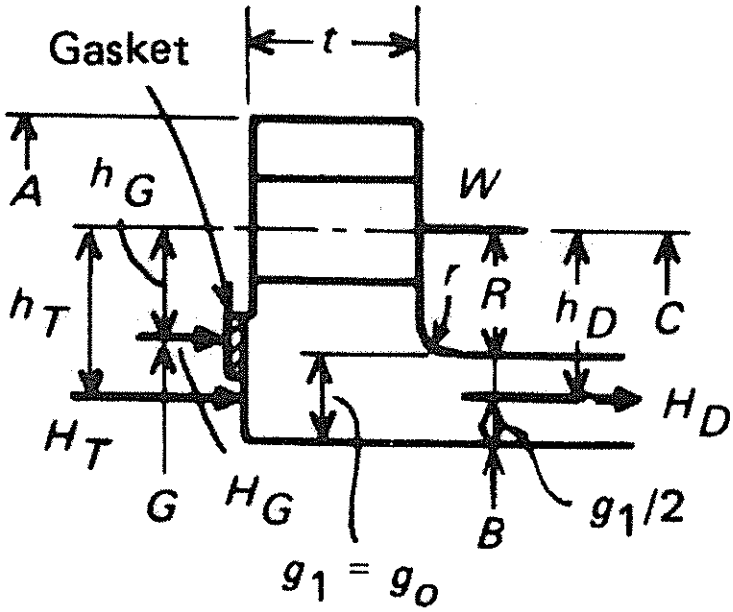

(5)

```
(* Bolted Flange Connections with flat metal Copper Gasket,
 Xe chamber high voltage feedthru *)
(* 350 psia MOP, conflat type head *)
```

```
(* Bolt Load at operating conditions *)
G = 0.72 (* Diameter, in. at gasket load location *)
P = 350 * 1.15  (* MAWP, internal design pressure *)
m = 4.75 (* gasket factor flat Cu gasket, Table 2-4.1 *)
N_g = 0.25 (* width of Cu gasket *)
b_o = N_g/32 (* N/4 for multiple serrations Table 2-5.2 (5),
 assume N/32 given a single knife edge serration as used in Conflats *)
If[b_o <= 0.25, b = b_o, b = .5 Sqrt[b_o]]
y = 13000 (* psi, design seating stress for soft copper, Table 2-5.1 *)
H = 0.785 G^2 P (* lb., Total hydrostatic end force *)
H_p = 2 b × π G m P (* lb., Total joint-contact surface compression load *)
W_m1 = H + H_p (* Minimum required bolt load, for operating *)
W_m2 = π G b y (* Minimum required bolt load, for gasket seating *)
```

0.72

402.5

4.75

0.25

0.0078125

0.0078125

13000

163.795

67.5712

231.366

229.729

In[54]:= (* Design Bolt Load*)

$A_b = \frac{\pi \times 0.1248^2}{4} \times 6$ (*cross sectional area of #8-32 screw*)

$SF = 4$ (* MEDSS *)

$S_T = 81000$

(*Unbrako - KS 1216 8-32 SHCS, 160, ksi tensile strength; T = -400 °F to 1200 °F OR ASTM-A493-95 Grade S30430; 81 ksi tensile strength *)

$S_a = S_T \div SF$

$L_b = S_a \times A_b$ (* lb., Max allowable bolt load *)

$A_{m1} = W_{m1} / S_a$ (* in^2,cross-sectional area of bolts under operating condition *)

$A_{m2} = W_{m2} / S_a$ (* in^2, cross-sectional area of bolts for gasket seating *)

If[$A_{m1} > A_{m2}$, $A_m = A_{m1}$, $A_m = A_{m2}$]

(* in^2, total required cross-sectional area of bolts *)

$W_o = W_{m1}$ (* lb., Flange design bolt load, for operating *)

$W_g = \frac{(A_m + A_b)\, S_a}{2}$ (* lb., Flange design bolt load, for gasket seating *)

$SF_u = L_b\, SF / W_g$

Out[54]= 0.0733956

Out[55]= 4

Out[56]= 81000

Out[57]= 20250

Out[58]= 1486.26

Out[59]= 0.0114255

Out[60]= 0.0113446

Out[61]= 0.0114255

Out[62]= 231.366

Out[63]= 858.814

Out[64]= 6.92239

$C_e = 0.3$ (*flange attachment constant*)
$p = 350 \times 1.15$ (*psi, MAWP*)
$E_f = 1.0$ (*Efficiency Factor *)
$d_{ga} = G$ (*in. gasket diameter*)
W_{m1}
(* lb., Minimum required bolt load, for operating *)
$h_G = 0.171$ (* in., Bending moment length *)
$\sigma_u = 77000.0$ (*psi, 304 L ultimate strength*)
$\sigma_a = 16700$ (*psi, 304 L allowable strength*)

$$t_h = d_{ga} \sqrt{\frac{(C_e * p)}{(\sigma_a * E_f)} + \frac{(1.9 * W_{m1} * h_G)}{(\sigma_a * E_f * d_{ga}{}^3)}}$$ (* in., required flange thickness *)

0.3

402.5

1.

0.72

231.366

0.171

77000.

16700

0.1

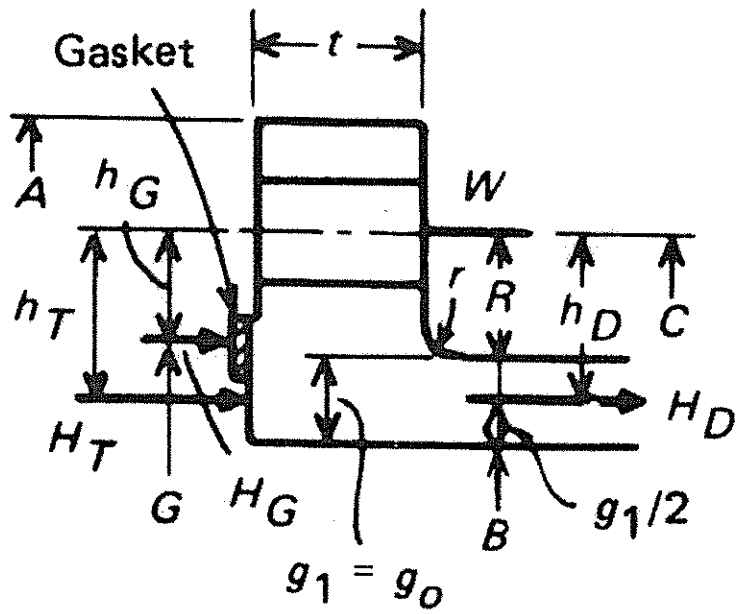

(5)

```
(* Bolted Flange Connections with flat metal Copper Gasket,
 Xe chamber gamma ray feedthru *)
(* 350 psia MOP, conflat type head *)
```

```
(* Bolt Load at operating conditions *)
G = 1.650 (* Diameter, in. at gasket load location *)
P = 350*1.15  (* MAWP, internal design pressure *)
m = 4.75 (* gasket factor flat Cu gasket, Table 2-4.1 *)
N_g = 0.25 (* width of Cu gasket *)
b_o = N_g/32 (* N/4 for multiple serrations Table 2-5.2 (5),
 assume N/32 given a single knife edge serration as used in Conflats *)
If[b_o <= 0.25, b = b_o, b = .5 Sqrt[b_o]]
y = 13000 (* psi, design seating stress for soft copper, Table 2-5.1 *)
H = 0.785 G^2 P (* lb., Total hydrostatic end force *)
H_p = 2 b × π G m P (* lb., Total joint-contact surface compression load *)
W_m1 = H + H_p (* Minimum required bolt load, for operating *)
W_m2 = π G b y (* Minimum required bolt load, for gasket seating *)
```

1.65

402.5

4.75

0.25

0.0078125

0.0078125

13000

860.208

154.851

1015.06

526.462

In[76]:= (* Design Bolt Load*)

$A_b = \frac{\pi \times 0.2052^2}{4} \times 6$ (*cross sectional area of 1/4-28 screw*)

$SF = 4$ (* MEDSS *)

$S_T = 81000$

(*Unbrako - KS 1216 1/4-28 SHCS, 160, ksi tensile strength; T = -400 °F to 1200 °F OR ASTM-A493-95 Grade S30430; 81 ksi tensile strength *)

$S_a = S_T \div SF$

$L_b = S_a \times A_b$ (* lb., Max allowable bolt load *)

$A_{m1} = W_{m1} / S_a$ (* in^2,cross-sectional area of bolts under operating condition *)

$A_{m2} = W_{m2} / S_a$ (* in^2, cross-sectional area of bolts for gasket seating *)

If[$A_{m1} > A_{m2}$, $A_m = A_{m1}$, $A_m = A_{m2}$]

(* in^2, total required cross-sectional area of bolts *)

$W_o = W_{m1}$ (* lb., Flange design bolt load, for operating *)

$W_g = \frac{(A_m + A_b)\, S_a}{2}$ (* lb., Flange design bolt load, for gasket seating *)

$SF_u = L_b\, SF / W_g$

Out[76]= 0.198425

Out[77]= 4

Out[78]= 81000

Out[79]= 20250

Out[80]= 4018.1

Out[81]= 0.0501264

Out[82]= 0.0259981

Out[83]= 0.0501264

Out[84]= 1015.06

Out[85]= 2516.58

Out[86]= 6.38661

$C_a = 0.13$ (*flange attachment constant*)
$p = 350 \times 1.15$ (*psi, MAWP*)
$E_f = 1.0$ (*Efficiency Factor *)
$d_{ga} = G$ (*in. gasket diameter*)
W_{m1}
(* lb., Minimum required bolt load, for operating *)
$h_G = 0.331$ (* in., Bending moment length *)
$\sigma_u = 77000.0$ (*psi, 304 L ultimate strength*)
$\sigma_a = 16700$ (*psi, 304 L allowable strength*)

$$th = d_{ga}\sqrt{\frac{C_a \times p}{\sigma_a \times E_f}}$$ (* in., required flange thickness, no bending moment *)

$$t_{ho} = d_{ga}\sqrt{\frac{(C_a * p)}{(\sigma_a * E_f)} + \frac{(1.9 * W_{m1} * h_G)}{(\sigma_a * E_f * d_{ga}{}^3)}}$$ (* in., required flange thickness *)

$p = 0$ (*psi, MAWP*)
W_{m2}
(* lb., Minimum required bolt load, for gasket seating *)

$$t_{hg} = d_{ga}\sqrt{\frac{(C_a * p)}{(\sigma_a * E_f)} + \frac{(1.9 * W_{m2} * h_G)}{(\sigma_a * E_f * d_{ga}{}^3)}}$$ (* in., required flange thickness *)

0.13

402.5

1.

1.65

1015.06

0.331

77000.

16700

0.0923592

0.178038

0

526.462

0.109616

```
(* Miscellaneous Calculations *)

(* UG-36 Openings in Pressure vessels*)
(* UG-36 (c) (3) (d),  No two unreinforced openings shall have their centers
  closer than the sum of their diameters: *)

(* This applies to all holes in the shell of the vessel. Actual holes have
  reinforcement built into the design so this is concervative. *)
```

$d_1 = 2.87$

$d_2 = 0.5$

$l_s = d_1 + d_2$

$l = \frac{\pi \times 7.625}{4}$ (* distance between holes*)

$l >= l_s$

2.87

0.5

3.37

5.98866

True

```
(* Drilled holes not penetrating shell *)
(* holes must be less than 2 " dia. & not less than 0.25 "*)
```

$D_i = 7.625$

$t = 0.5$

D_i / t

$D_i / t >= 10$

7.625

0.5

15.25

True

$d_h = 0.375$ (* UNF 3/8-16, major dia. *)

d_h / D_i

0.375

0.0491803

```
Rt = 0.375 (* from graph *)
If [ dh / Di < 0.03, Rt = .25, Rt = Rt ]

tmn = t (Rt) (* Appx. 30 Fig. 30-1, remaining wall thickness*)
```

0.375

0.375

0.1875 0.5 - .1875 = 0.313 IN.

```
dh = 0.250 (* UNF 1/4-20, major dia. *)
dh / Di
```

0.25

0.0327869

```
Rt = 0.256 (* from graph *)
If [ dh / Di < 0.03, Rt = .25, Rt = Rt ]

tmn = t (Rt) (* Appx. 30 Fig. 30-1, remaining wall thickness*)
```

0.256

0.256

0.128 0.5 - 0.128 = 0.372 IN.

```
(* Drilled / tapped holes in unstayed flat head *)
(* reinforcement required, replacement of area *)
(* 8-32 for mini conflats *)
tr = 1.26123 (* in., minimum required flange thickness *)
ta = 1.5 (* in., actual flange thickness *)
dh = 0.164 (* in., hole diameter *)
dd = 0.312 (* in., depth of hole *)

Ar = dh × dd (* in.^2, area required *)
Aa = dh (ta - dd) (* in.^2, area available *)
If [ Aa > Ar, "Reinforcement OK for mini-conflat blind holes",
 "Reinforcement NOT OK for mini-conflat blind holes" ]
```

1.26123

1.5

0.164

0.312

0.051168

0.194832

Reinforcement OK for mini-conflat blind holes

```
(* Drilled / tapped holes in unstayed flat head *)
(* reinforcement required, replacement of area *)
(* 8-32 for mounting brackets inside vessel *)
tr = 1.26123 (* in., minimum required flange thickness *)
ta = 1.5 (* in., actual flange thickness *)
dh = 0.164 (* in., hole diameter *)
dd = 0.25 (* in., depth of hole *)

Ar = dh × dd (* in.^2, area required *)
Aa = dh (ta - dd) (* in.^2, area available *)
If [ Aa > Ar, "Reinforcement OK for mounting bracket blind holes",
 "Reinforcement NOT OK for mounting bracket blind holes" ]
```

1.26123

1.5

0.164

0.25

0.041

0.205

Reinforcement OK for mounting bracket blind holes

```
(* Drilled / tapped holes in unstayed flat head *)
(* reinforcement required, replacement of area *)
(* 1/4-28 for medium conflat, center hole *)
tr = 1.26123 (* in., minimum required flange thickness *)
ta = 1.5 (* in., actual flange thickness *)
dh = 0.250 (* in., hole diameter *)
dd = 0.5 (* in., depth of hole *)

Ar = dh × dd (* in.^2, area required *)
Aa = dh (ta - dd) (* in.^2, area available *)
If [ Aa > Ar, "Reinforcement OK for medium conflat blind holes",
 "Reinforcement NOT OK for medium conflat blind holes" ]
```

1.26123

1.5

0.25

0.5

0.125

0.25

Reinforcement OK for medium conflat blind holes

```
(* Weld impact testing exemption calculation *)
(* UHA-51 (g) *)
 Sa = 16700
 S1 = 3499.17
 Svm = 7754.6879
 If [S1 / Sa < 0.4, "Impact testing NOT required for weld",
 "Impact testing REQUIRED required for weld"]
```

16700

3499.17

7754.6879

Impact testing NOT required for weld

```
(* Base material Impact testing exemption *)
(* UHA-51 (d) (1) (a) austenitic chromium-nickel stainless steels: 304, 304 L,
 316, 316 L.
```

```
(* Fracture Critical Components *)
```

In[91]:=

```
(* The applied stress is: *)
Ri = 3.8125
Ro = 4.3125
MAWP = 978
σa = 16700 (*allowable stress for 316 L SST*)
σy = 37000
Ri = 3.8125
Ro = 4.3125
t = Ro - Ri
Ratio = Ro/Ri
If [1.1 < Ratio < 1.5, medium wall]
If [Ratio < 1.1, thin wall]
If [Ratio > 1.5, thick wall]
(*Circumferential Stress, S2*)
```

$$S_2 = \frac{MAWP\,(R_o^2 + R_i^2)}{(R_o^2 - R_i^2)}$$

Out[91]= 3.8125

Out[92]= 4.3125

Out[93]= 978

Out[94]= 16700

Out[95]= 37000

Out[96]= 3.8125

Out[97]= 4.3125

Out[98]= 0.5

Out[99]= 1.13115

Out[100]= medium wall

Out[103]= 7976.34

```
(* First consider actual  stress intensity factors from literature (testing). Then
   apply this KIc = KI value to the Xe vessel at its MAWP/stress *)

(* Degraded Piping Program Phase II, 4/99 *)
(* Material 304 and 316 stainless steel, range: 561 to 13,400 in-lb/in^2,
 Ji used is the lowest measurable value in all tests, parent or welded material *)
```

In[14]:=

```
Ji = 561  (* in-lb/in^2 *)

v = 0.33 (* Poisson's ratio *)
```

$$E_y = \frac{29.7 \times 10^6}{(1 - v^2)} \text{ (* psi *)}$$

$$K_{Ic} = \sqrt{Ji \times E_y} \text{ (* psi } \sqrt{in} \text{ *)}$$

$$a_{crs} = \frac{1}{1.21\,\pi} \left(\frac{K_{Ic}}{S_2}\right)^2 \text{ (* in., crack critical length, surface flaw *)}$$

$$a_{cri} = \frac{1}{\pi} \left(\frac{K_{Ic}}{S_2}\right)^2 \text{ (* in., crack critical length, imbedded flaw *)}$$

$$lengthc_{crs} = 4 \times a_{crs}$$

$$lengthc_{cri} = 4 \times a_{cri}$$

```
(* considering leak before break  criteria,
 leak occurs occurs before catastrophic failure in a pressure vessel when *)
```

$$\sqrt{\frac{\pi\, t\, S_2{}^2}{1 - \frac{1}{2}\left(\frac{S_2}{\sigma_y}\right)^2}} \text{ (* Fracture and Fatigue Control in Structures,}$$

```
 Rolfe and Barsom, Prentice-Hall, 1977, pg. 394*)
```

$$K_{Ic} >= \sqrt{\frac{\pi\, t\, S_2{}^2}{1 - \frac{1}{2}\left(\frac{S_2}{\sigma_y}\right)^2}} \text{ (* Hoop stress applies, } S_2 \text{ *)}$$

$$\text{If}\left[K_{Ic} >= \sqrt{\frac{\pi\, t\, S_2{}^2}{1 - \frac{1}{2}\left(\frac{S_2}{\sigma_y}\right)^2}},\right.$$

```
 "Leaking should occur before failure", "failure may occur before leaking"]

(* LIFE Expectancy Cycles *)
```

$$a_o = 0.125 \text{ (* in., initial flaw size *)}$$

$$A = 3.0 \times 10^{-10} \text{ (* Metal Fatigue in Engineering, 1980, John Wiley \& Sons, pg 86 *)}$$

$$n = 3.25 \text{ (* Metal Fatigue in Engineering, 1980, John Wiley \& Sons, pg 86 *)}$$

$$N_f = \frac{2}{2 - n}\left(\frac{1}{A\left(1.12\,\frac{S_2}{1000}\sqrt{\pi}\right)^n}\right)\left(a_{crs}{}^{\left(\frac{2-n}{2}\right)} - a_o{}^{\left(\frac{2-n}{2}\right)}\right)$$

```
(* Damage Tolerant Design Handbook" V.2, 1983 *)
```

$$N_f = \frac{2}{2 - n}\left(\frac{1}{A\left(1.12\,\frac{S_2}{1000}\sqrt{\pi}\right)^n}\right)\left(a_{cri}{}^{\left(\frac{2-n}{2}\right)} - a_o{}^{\left(\frac{2-n}{2}\right)}\right)$$

```
(* Damage Tolerant Design Handbook" V.2, 1983 *)
```

Out[14]= 561

Out[15]= 0.33

Out[16]= 3.33296×10^{7}

Out[17]= 136740.

Out[18]= 77.3126

Out[19]= 93.5482

Out[20]= 309.25

Out[21]= 374.193

Out[22]= 10115.1

Out[23]= True

Out[24]= Leaking should occur before failure

Out[25]= 0.125

Out[26]= $3. \times 10^{-10}$

Out[27]= 3.25

Out[28]= 2.42577×10^{6}

Out[29]= 2.43076×10^{6}

In[60]:= (* For the ellipsoidal head *)

$D_i = 7.625$

$t_w = 0.5$

$E_f = 0.7$ (*butt weld efficiency based on no inspection, Table UW-12*)

$$\sigma = \frac{\text{MAWP}\,(D_i + 0.2\,t_w)}{(2\,E_f\,t_w)}$$

$S_2 = \sigma$

$$a_{crs} = \frac{1}{1.21\,\pi}\left(\frac{K_{Ic}}{S_2}\right)^2$$ (* in., crack critical length, surface flaw *)

$$a_{cri} = \frac{1}{\pi}\left(\frac{K_{Ic}}{S_2}\right)^2$$ (* in., crack critical length, imbedded flaw *)

$\text{lengthc}_{crs} = 4 \times a_{crs}$

$\text{lengthc}_{cri} = 4 \times a_{cri}$

(* considering leak before break criteria,
leak occurs occurs before catastrophic failure in a pressure vessel when *)

$$\sqrt{\frac{\pi\,t\,S_2^{\,2}}{1 - \frac{1}{2}\left(\frac{S_2}{\sigma_y}\right)^2}}$$ (* Fracture and Fatigue Control in Structures,

Rolfe and Barsom, Prentice-Hall, 1977, pg. 394*)

$$K_{Ic} >= \sqrt{\frac{\pi\,t\,S_2^{\,2}}{1 - \frac{1}{2}\left(\frac{S_2}{\sigma_y}\right)^2}}$$ (* Hoop stress applies, S_2 *)

$$\text{If}\left[K_{Ic} >= \sqrt{\frac{\pi\,t\,S_2^{\,2}}{1 - \frac{1}{2}\left(\frac{S_2}{\sigma_y}\right)^2}},\right.$$

"Leaking should occur before failure", "failure may occur before leaking"]

(* LIFE Expectancy Cycles *)

$a_o = 0.125$ (* in., initial flaw size *)

$A = 3.0 \times 10^{-10}$ (* Metal Fatigue in Engineering, 1980, John Wiley & Sons, pg 86 *)

$n = 3.25$ (* Metal Fatigue in Engineering, 1980, John Wiley & Sons, pg 86 *)

$$N_f = \frac{2}{2-n}\left(\frac{1}{A\left(1.12\,\frac{S_2}{1000}\sqrt{\pi}\right)^n}\right)\left(a_{crs}^{\left(\frac{2-n}{2}\right)} - a_o^{\left(\frac{2-n}{2}\right)}\right)$$

(* Damage Tolerant Design Handbook " V.2, 1983 *)

$$N_f = \frac{2}{2-n}\left(\frac{1}{A\left(1.12\,\frac{S_2}{1000}\sqrt{\pi}\right)^n}\right)\left(a_{cri}^{\left(\frac{2-n}{2}\right)} - a_o^{\left(\frac{2-n}{2}\right)}\right)$$

(* Damage Tolerant Design Handbook " V.2, 1983 *)

Out[60]= 7.625

Out[61]= 0.5

Out[62]= 0.7

Out[63]= 10792.9

Out[64]= 10792.9

Out[65]= 42.2259

Out[66]= 51.0934

Out[67]= 168.904

Out[68]= 204.373

Out[69]= 13824.2

Out[70]= True

Out[71]= Leaking should occur before failure

Out[72]= 0.125

Out[73]= $3. \times 10^{-10}$

Out[74]= 3.25

Out[75]= 900192.

Out[76]= 902921.

In[104]:= (* For the flat head *)

$\sigma = 5182.85$ (* from head_350_K_openings2.nb*)

$S_2 = \sigma$

$a_{crs} = \frac{1}{1.21\,\pi}\left(\frac{K_{Ic}}{S_2}\right)^2$ (* in., crack critical length, surface flaw *)

$a_{cri} = \frac{1}{\pi}\left(\frac{K_{Ic}}{S_2}\right)^2$ (* in., crack critical length, imbedded flaw *)

$lengthc_{crs} = 4 \times a_{crs}$

$lengthc_{cri} = 4 \times a_{cri}$

(* considering leak before break criteria,
leak occurs occurs before catastrophic failure in a pressure vessel when *)

$\sqrt{\frac{\pi\, t\, S_2{}^2}{1 - \frac{1}{2}\left(\frac{S_2}{\sigma_y}\right)^2}}$ (* Fracture and Fatigue Control in Structures,
Rolfe and Barsom, Prentice-Hall, 1977, pg. 394*)

$K_{Ic} >= \sqrt{\frac{\pi\, t\, S_2{}^2}{1 - \frac{1}{2}\left(\frac{S_2}{\sigma_y}\right)^2}}$ (* Hoop stress applies, S_2 *)

$\text{If}\left[K_{Ic} >= \sqrt{\frac{\pi\, t\, S_2{}^2}{1 - \frac{1}{2}\left(\frac{S_2}{\sigma_y}\right)^2}},\right.$
"Leaking should occur before failure", "failure may occur before leaking"]

(* LIFE Expectancy Cycles *)

$a_o = 0.125$ (* in., initial flaw size *)

$A = 3.0 \times 10^{-10}$ (* Metal Fatigue in Engineering, 1980, John Wiley & Sons, pg 86 *)

$n = 3.25$ (* Metal Fatigue in Engineering, 1980, John Wiley & Sons, pg 86 *)

$N_f = \frac{2}{2-n}\left(\frac{1}{A\left(1.12\,\frac{S_2}{1000}\sqrt{\pi}\right)^n}\right)\left(a_{crs}{}^{\left(\frac{2-n}{2}\right)} - a_o{}^{\left(\frac{2-n}{2}\right)}\right)$

(* Damage Tolerant Design Handbook " V.2, 1983 *)

$N_f = \frac{2}{2-n}\left(\frac{1}{A\left(1.12\,\frac{S_2}{1000}\sqrt{\pi}\right)^n}\right)\left(a_{cri}{}^{\left(\frac{2-n}{2}\right)} - a_o{}^{\left(\frac{2-n}{2}\right)}\right)$

(* Damage Tolerant Design Handbook " V.2, 1983 *)

Out[104]= 5182.85

Out[105]= 5182.85

Out[106]= 183.113

Out[107]= 221.567

Out[108]= 732.454

Out[109]= 886.269

Out[110]= 6527.84

Out[111]= True

Out[112]= Leaking should occur before failure

Out[113]= 0.125

Out[114]= $3. \times 10^{-10}$

Out[115]= 3.25

Out[116]= 9.92359×10^{6}

Out[117]= 9.93542×10^{6}

```
(* Fragment Evaluation *)

(* It is assumed that the most vulnerable point in this vessel is the Ceramaseal high
   voltage feedthroughs mounted to the mini-Conflats which are mounted to
   the 350 MOP head. These could easily be bumped or damaged by mishandling
   resulting in a fragment / projectile. The following will estimate the
   shielding thickness required for personnel protection near the vessel
   head. Also assume all of the energy is transferred to a single fragment. *)
```

In[22]:= $m_{fg} = 37.7$ (* g; actual measurment *)

$m_{fs} = m_{fg} * 6.852 \times 10^{-5}$ (* lb.s^2/ft; slugs *)

$v_f = \sqrt{\frac{2\,\text{Energy}}{m_{fs}}}$ (* ft/s *)

Out[22]= 37.7

Out[23]= 0.0025832

Out[24]= 6575.9

In[21]:= (* Check zero mass velocity. Fragemnt can travel no faster than the shock
wave that is driving it. *)

$P_{ratio} = \frac{P_1}{P_2}$ (* *)

```
g = 32.2 (* ft/s^2 *)
T = 528 (* °R *)
k = 1.4
R = 53.3 (* ft-lb/lb-°R *)
```

$a = \sqrt{k\,g\,R\,T}$

$v_{f1} = a \times 2.55$ (* ft/s Figure 12 Zero Mass velocity *)

$v_{f12} = v_{f1}\,\mathrm{Cos}\left[\frac{0.785398}{2}\right]$ (* MEDSS eqn. 38 *)

$v_{flm} = v_{f1} \times 0.3048$ (* m/s *)

$v_{flm2} = v_{rf} \times 0.3048$ (* m/s *)

$m_1 = \frac{2\,\mathrm{Energy}}{v_{f1}^2}\,32.2$ (* lb_m; largest fragment that can achieve this velocity *)

Out[94]= 66.5306

Out[95]= 32.2

Out[96]= 528

Out[97]= 1.4

Out[98]= 53.3

Out[99]= 1126.35

Out[100]= 2872.19

Out[101]= 2653.55

Out[102]= 875.443

Out[103]= 808.804

Out[104]= 0.436013

```
(* The Ceramaseal feedthrough mass is <
   m1 so it can only achive this maximum velocity.

  Fragment shielding evaluation..... *)
```

In[105]:= $T_m = 6 \times 10^{-5} \left(\frac{m_{fg}}{1000}\right)^{0.33} v_{flm}$ (* UK formula *)

$T_m = T_m \times 12 \times 3.28084$ (* in *)

(* Thor formula: Lexan *)

$\alpha = 1.814$

$\beta = -1.652$

$c_1 = 7.329$

$A_f = \frac{\pi\, 0.5^2}{4}$

$T_{in} = \frac{1}{A_f} \left(\frac{v_{fl}}{10^{c_1}\ (7000\ \frac{m_l}{32.2})^{\beta}}\right)^{\frac{1}{\alpha}}$

Out[105]= 0.0178062

Out[106]= 0.701032

Out[107]= 1.814

Out[108]= -1.652

Out[109]= 7.329

Out[110]= 0.19635

Out[111]= 2.36231

(* After ricochet the shielding thickness needs to be:*)

$$T_m = 6 \times 10^{-5} \left(\frac{m_{fg}}{1000}\right)^{0.33} v_{flm2} \quad \text{(* m; UK formula *)}$$

$$T_m = T_m \times 12 \times 3.28084 \quad \text{(* in *)}$$

(* Thor formula: Lexan *)

$\alpha = 1.814$

$\beta = -1.652$

$c_1 = 7.329$

$$A_f = \frac{\pi\, 0.5^2}{4}$$

$$T_{in} = \frac{1}{A_f} \left(\frac{v_{fl2}}{10^{c_1} \left(7000 \frac{m_1}{32.2}\right)^{\beta}}\right)^{\frac{1}{\alpha}}$$

Out[112]= 0.0164508

Out[113]= 0.647669

Out[114]= 1.814

Out[115]= -1.652

Out[116]= 7.329

Out[117]= 0.19635

Out[118]= 2.26142

AAN99-100148-OA (A)

File No. MESN99-038-0A
July 2, 1999

MECHANICAL ENGINEERING SAFETY NOTE

Gas Delivery System and Reclamation Cylinders for Gamma Ray Imager

Prepared by:

B Myers

Blake Myers
Mechanical Engineer
New Technologies Engineering Division

Reviewed by:

Chuck Borzileri

Chuck Borzileri
Pressure Consultant
Applied Research Engineering Division

Dan Archer
Experimental Physicist
C&MS Directorate/NAI Program

Approved by:

Neil Franks for

Satish Kulkarni
Division Leader
New Technologies Engineering Division

Distribution:
Dan Archer, L-186
Chuck Borzileri, L-384
Satish Kulkarni, L-113
Blake Myers, L-174
Tim Ross, L-474
Kathlyn Snyder, L-172
Klaus Ziock, L-43
Engineering Records Center, L-118

Description of the System:

This safety note covers the gas delivery system and the gas reclamation cylinders used in a full volume gamma ray imager located in Building 132S, Room 2723. There are three parts to the imager. The first part is the gas delivery system built commercially by Insync Systems. It is used to purify and deliver electronegative free (99.9999999%) gas at an MOP of 135 psig. The second part of the system consists of two time projection chambers (TPC) where the experiments will be performed. The TPCs will nominally operate at 300psig but one has been designed for 400 and the other for 980 psig MAWP. They are covered by a separate safety note titled Time Projection Chamber, MESN99-020-0A. The third part of the system uses cryogenic reclamation cylinders to reclaim the purified gas. These cylinders have been fabricated by Acme Cryogenics and are rated by Acme to 2200 psig MAWP. The system layout is seen in Fig. 1. Gas will be transferred in the system by thermal cycles, using LN2 to create the temperature gradient via conduction through the walls of the reclamation cylinders. A certain percentage of alcohol may be used in the LN2 bath to raise the temperature of the bath above 77K. The asphyxiation hazard associated with the evaporation of LN2 and alcohol is dealt with in OSP 132S.31.

Note that there are four MAWPs in this system. They are MAWP0 for the input to the Supply Panel, MAWP1 for the Gas Delivery portion, MAWP2 for TPCs and MAWP3 for the Gas Reclamation portion.

The Gas Delivery System purifies research grade gas to an ultraclean gas that is free of electronegative materials. It consists of a Control Panel plus 4 secondary panels and connecting plumbing . A schematic is shown in Fig. 2. All of the process valves on the secondary panels are all metal, bellows sealed valves actuated with 50 psig house air with manual switches controlling the air. The switches are on the Control Panel. The secondary panels are designated as: Supply, Fig. 3, Purification, Fig. 4, Chamber, Fig. 5 and Reclamation, Fig. 6.

The Supply Panel has connections for three gas cylinders of research grade (99.999%) gas. The gas cylinders will contain Ar, Xe and CO2. (There may be interest in using combustible gases in later stages of this research. A revision of this note would be written to cover such work.) The pressure output of the cylinders is limited by a regulator to 135 psig MOP and protected by a 157 psig rupture disc. It is connected to the Purification and Reclamation panels as shown in Fig.2.

The Purification Panel includes a room temperature getter (Oxisorb Model S511-HV) followed by a hot getter (SAES Phase 1 MonoTorr). The Oxisorb and the MonoTorr

both have a manufacturer's MOP of 150 psig. The material in the getters can be returned to the manufacturer, after being saturated, for regeneration or disposal. There is a mass flow controller and a 157 psig rupture disk following the MonoTorr. The output of the Purification Panel flows to 3 places: 1) the Chamber Panel which leads to the TPC's, 2) the recirculation pump (which is currently replaced by a jumper) and 3) the Reclamation Panel, again as shown in Fig. 2.

The Chamber Panel provides gas flow to the TPCs, the turbomolecular pump (TMP) and system vent. The gas flow/pressure from the chamber into the rest of the system is restricted operationally by pressure regulators at the outlet of the chambers. Intermediate pressure gas is prevented from pressuring the purification panel above the MOP of 135 psig by both purification system operating procedures and a 157 psig rupture disk.

The rupture disc reliability is closely regulated by the manufacturer to the requirement that 2 discs from the involved lot rupture at the lot pressure plus or minus 5%. The lot pressure is the average of the two test disc rupture pressures and it must fall into the manufacturing range of -4 / +7 % of the pressure that is ordered by the customer. The lot pressure is stamped on a tag attached to the disc body. It is 157 psig. This means that MAWP1 could be as high as 168 psig for the low pressure portion of the the system. We designate MAWP1 at the lot pressure of 157 psig.

Overpressuring the TPCs will be prevented in final operations by: 1- monitoring and controlling gas flow into the chamber with the Mass Flow Controller, 2- using a load cell with 50 gm resolution interlocked to the valve allowing flow into the chamber, 3- having 402 psig rupture disks on the chambers. In preliminary operations the mass flow controller will be used under 2-man operator control to limit the amounts of Xe to 840 gm and Ar to 250 gm as measured by a Data Instruments load cell with a resolution of 200 gm. This would limit the TPC pressure to <3/8 the MAWP2 or ~150 psig as shown in Tables 1 and 2 respectively. The operators will have pressure readings on the TPCs to confirm the control and can revert to LN2 cooling and venting to limit the pressure. There is inherent safety in gas transfer from a TPC to a reclamation cylinder in that the volume ratio, TPC to RC, is ~3 but the MAWP ratio is 400/2200 or ~1/5.

The Reclamation Panel allows for gas to be transferred into or out of the reclamation cylinders. These cylinders attach to the reclamation panel with a VCR fitting (for cleanliness) immediately followed by a rupture disc set at 2230 psig and a pressure transducer. They each have a volume of 5.36 liter. Gas is drawn into a reclamation cylinder by dipping it in a surrounding cryogenic bath of LN2 or LN2/alcohol mix. In preliminary operations the mass of Xe in a reclamation cylinder will be limited by 2-man operator control to 8 kg and Ar in a separate cylinder to 650 gm as measured by a Data Instruments load cell with a resolution of 200 gm. This will limit the pressure to <1/2 of MAWP3 or ~1000 psig as shown in Tables 1 and 2 respectively. The associated pressure transducer reading will confirm the 2-man operator control. Above these masses the

cylinder will be weighed with a load cell from Data Instruments to measure the amount of gas in the cylinder. As above, in final configuration the load cell will be interlocked to the inlet flow valve,

The characteristics of the gases of interest are given in the following table:

Table 1. Process Gas Characteristics

Gas	Mol.Wt. grams	Melting Point °C	Boiling Point °C	Critical Temp °C	Critical Pressure psia	Critical Density g/ml
Ar	39.95	-189.4	-185.9	-122.4	705.4	0.531
Xe	131.1	-111.9	-108.1	16.6	846.7	1.155
CO_2	44.01	-56.6	-78.4*	16.6	1070.6	0.460

* Sublimation Temperature

Tables 2 and 3 respectively show that <10.6 kg of Xe and <1.3 kg of Ar will limit the cylinder pressures to less than the 2200psig MAWP3. The reclamation cylinders themselves weigh about 75 lbs. The present load cells have a 300 lb capacity, a 0.5 lb resolution and a tare weight removal feature on the readout.

Table 2. Pressure vs Mass of Argon in a Reclamation Cylinder or a TPC

reclaim cyl (liters)=		5.4				
T=294K			Reclaim		TPC	
p(atm)	p(psi)	moles/liter	V Ar@1atr	mass(kg)	V Ar@1atr	mass(kg)
1	14.7	0.0	5.4	0.01	15.04	0.02
1.5	22.05	0.1	8.1	0.01	22.57	0.04
2	29.4	0.1	10.8	0.02	30.10	0.05
3	44.1	0.1	16.2	0.03	45.34	0.08
4	58.8	0.2	21.5	0.04	60.28	0.10
5	73.5	0.2	26.9	0.04	75.40	0.12
6	88.2	0.2	32.4	0.05	90.55	0.15
7	102.9	0.3	37.8	0.06	105.71	0.18
8	117.6	0.3	43.2	0.07	120.89	0.20
9	132.3	0.4	48.6	0.08	136.09	0.23
10	147	0.4	54.1	0.09	151.31	0.25
15	220.5	0.6	81.4	0.13	227.70	0.38
20	294	0.8	108.8	0.18	304.56	0.50
25	367.5	1.1	136.5	0.23	381.89	0.63
30	441	1.3	164.3	0.27	459.66	0.76
35	514.5	1.5	192.2	0.32	537.87	0.89
40	588	1.7	220.3	0.37	616.50	1.02
45	661.5	1.9	248.5	0.41	695.52	1.15
50	735	2.1	276.9	0.46	774.91	1.28
60	882	2.6	334.0	0.55	934.73	1.55
70	1029	3.0	391.6	0.65	1095.77	1.82
80	1176	3.5	449.5	0.74	1257.79	2.08
90	1323	3.9	507.6	0.84	1420.57	2.35
100	1470	4.4	566.0	0.94	1583.82	2.62
120	1764	5.3	682.7	1.13	1910.65	3.17
140	2058	6.2	799.0	1.32	2235.95	3.71
160	2352	7.1	913.8	1.51	2557.34	4.24
180	2646	7.9	1026.5	1.70	2872.59	4.76
200	2940	8.8	1136.2	1.88	3179.75	5.27
220	3234	9.6	1242.5	2.06	3477.20	5.76
240	3528	10.4	1344.9	2.23	3763.74	6.24
260	3822	11.1	1443.1	2.39	4038.63	6.69
280	4116	11.9	1537.0	2.55	4301.43	7.13
300	4410	12.6	1626.6	2.70	4551.99	7.54
from Thermodynamic Properties od Argon from the Triple Point to 300 K At						
Pressures to 1000 Atmospheres			QD 162 G1 1969B A.L.Gosman			

Table3. Pressure vs Mass of Xenon in a Reclamation Cylinder or a TPC

	reclaim cyl (liters)=		5.36				
	T=295K			Reclaim (Liters)		TPC (Liters)	
m^3/kg	p(atm)	p(psi)	moles/liter	V Xe@1at	mass(kg)	V Xe@1at	mass(kg)
185.80	1.0	14.5	0.0	5.3	0.03	14.91	0.08
36.33	4.9	72.4	0.2	27.3	0.15	76.27	0.41
17.63	9.9	144.9	0.4	56.2	0.30	157.17	0.85
11.38	14.8	217.3	0.7	87.0	0.47	243.50	1.31
8.24	19.7	289.8	0.9	120.2	0.65	336.36	1.81
6.34	24.7	362.2	1.2	156.1	0.84	436.92	2.35
5.07	29.6	434.7	1.5	195.5	1.05	547.08	2.94
4.14	34.5	507.1	1.8	239.3	1.29	669.64	3.60
3.43	39.5	579.6	2.2	289.0	1.56	808.81	4.35
2.85	44.4	652.0	2.7	347.1	1.87	971.25	5.23
2.37	49.3	724.5	3.2	418.1	2.25	1170.17	6.30
1.93	54.3	796.9	3.9	512.2	2.76	1433.51	7.72
1.50	59.2	869.4	5.1	662.3	3.56	1853.49	9.98
0.86	64.2	941.8	8.8	1147.7	6.18	3211.98	17.29
0.67	69.1	1014.3	11.4	1483.2	7.98	4150.65	22.34
0.62	74.0	1086.7	12.3	1594.5	8.58	4462.12	24.02
0.60	79.0	1159.2	12.8	1664.1	8.96	4657.10	25.07
0.58	83.9	1231.6	13.2	1715.5	9.23	4800.72	25.84
0.56	88.8	1304.1	13.5	1756.9	9.46	4916.56	26.46
0.55	93.8	1376.5	13.8	1791.5	9.64	5013.52	26.98
0.54	98.7	1449.0	14.0	1821.5	9.80	5097.45	27.44
0.53	108.6	1593.9	14.4	1871.8	10.07	5238.14	28.19
0.52	118.4	1738.8	14.7	1913.0	10.30	5353.50	28.81
0.51	128.3	1883.7	15.0	1949.1	10.49	5454.67	29.36
0.50	138.2	2028.6	15.2	1980.3	10.66	5541.95	29.83
0.49	148.0	2173.5	15.5	2008.8	10.81	5621.78	30.26
0.49	157.9	2318.4	15.7	2034.9	10.95	5694.56	30.65
0.48	167.8	2463.3	15.8	2058.5	11.08	5760.86	31.01
0.48	177.6	2608.2	16.0	2081.0	11.20	5823.82	31.34
0.47	187.5	2753.1	16.2	2100.5	11.31	5878.18	31.64
0.47	197.4	2897.9	16.3	2119.8	11.41	5932.29	31.93
0.46	217.1	3187.7	16.6	2153.9	11.59	6027.79	32.44
0.45	236.9	3477.5	16.8	2185.8	11.76	6116.94	32.92
7.19	79.0	1159.2	3.5	452.6	0.75	<- Ar for comparison	

Once the gas has been condensed in the bottom of the reclamation cylinders, pressure is built in the reclamation cylinders by removing the cryogenic bath. Gas is introduced into the low pressure loop of the system through a regulator as shown in Fig. 2. The pressure of the gas is monitored with a pressure transducer and is physically limited by a 157 psig rupture disk. Normal gas flow is into the Gas Purification System from the reclamation cylinders.

InSync Systems certifies the tubing, fittings and weldments as shown in Appendices D-G. Copies of all Insync certification documents are attached in AppendixD.

Hazards:

The LLNL safety guidance is to calculate the isentropic energy release associated with the expansion of the contained gas from MAWP3 to the local atmospheric pressure. The pertinent equation is

$$E= kRT/ (k-1) ((p_2/p_1)\exp((k-1)/k)-1), \quad \text{ftlb/lb}$$

Using values as follows

> k = 1.67 for Ar and Xe, 1.3 for CO2, T = 530R, p_1= 2244.3 psia, p_2= 14.3 psia, R = 1545/MW ft lb / lb F, MW for Ar = 39.9, for Xe = 131.3, for CO2 = 44, storage masses for Ar and Xe from Tables 1 and 2 and for CO2 from 5.36 liter and perfect gas density

gives the greatest total delta energy for Xe of 3.26E5 ft lb / cylinder equivalent to 97.8 gm of TNT. The total is over the 7.5E4 ft lb level prescribed as the lower limit for requiring a safety note for manned area equipment. A lower total delta energy value results for CO2 because its three atom molecule lowers k from 1.67 to 1.30 and for Ar because of its greater departure from a perfect gas.

The operational pressure hazards are tempered by the use of rupture discs to limit the service pressures to the MAWPs. These discs are closely controlled by their manufacturers as discussed earlier.

Two-man operator judgment is required to limit the fill gas weights in initial runs to give pressures of ~ half MAWP3. There will be interlocks on the TPC and reclamation cylinder fill levels to prevent over charging before going on to higher fill weights and pressures.

There is a slight potential for asphyxiation associated with the free evaporation of LN2 and for excessive noise associated with valve venting. These hazards are discussed in OSP 132S.31.

Pressure Safety Assessment:

Acme designed the reclamation cylinders in accordance with ASME Boiler and Pressure Vessel Code, Section 8, Division 1, 1998. These calculations are shown in Appendix B. They did not Code stamp the vessels for reasons that are not clear at this juncture. The fabrication drawing is shown in Appendix C. As shown the cylindrical portion is 4-in. Schedule 160 pipe with an OD of 4.50 in. and an ID of 3.44 in. The heads are 4-in Schedule 160 welding pipe caps with the same inner and outer diameter as the pipe as

shown also in Appendix C. The welds are full penetration with a standard 37.5 degree bevel on each part. The cylinder material is Type 316L stainless steel.
The minimum thickness of the wall of the vessel nozzle is 0.035 in. as shown in Appendix C. The ID of the nozzle is 0.180 so that the nominal stress at MAWP3 is pr/t= 2200*0.090/.035= 5700 psi.

Thick wall pressure vessel calculations for the main body in accordance with Timoshenko (2) show a von Mises stress (Timoshenko (3)) of 5.7 ksi which gives a factor of safety of 32 on the 316L steel at ~70K and 17 (Aerospace Materials ...(4)) at room temperature. All welding at Acme was done by ASME Code certified welders. Acme tested all four cylinders at 3300 psig.

InSync Systems fabricated all of the panel plumbing in their shop under SEMI (Semiconductor Equipment and Materials International) rules. All pressure boundaries are Type 316 stainless. All welding is automatic Orbital. Fabrication conditions are clean to meet the SEMI standards. Table 4 and Appendix D show the properties of the components in the InSync assemblies. The pressure ratings for the components are seen to be a minimum of 200 psig for the low pressure system, 1000 psig for the 980 psig system and 2200 psig for the 2200 psig system. SEMI standards do not require a pressure check of plumbing in order to maintain the cleanliness of the internal surfaces. InSync did a vacuum leak test of the plumbing in each panel with the satisfactory results shown in Appendix E. InSync did the panel connecting plumbing at Livermore. The table shows the tubing and fittings to be well above the 157 psig MAWP1.

This note provides for (1) pressure proof testing at 1.27 X MAWP1 of all of the branches which are rated at an MAWP1 of 157 psig, (2) leak testing at 0.5 X MAWP2 of the TPC circuit and (3) pressure proof testing of the high pressure portion of the Reclamation Panel and Cylinder circuits at 0.85 X MAWP3. The 157 psig branches test pressure level is limited by the 200 psig limit of the Supply Panel regulator output pressure gages. The TPC circuit test pressure is limited for operational convenience noting that the chambers have been tested to 1.5 X MAWP2 separately and that the valves and hoses are rated well above MAWP2. The Reclamation Panel and Cylinder test pressure level is limited by the need to preserve the high pressure rupture discs. Here it is noted that the chambers have been pressure tested separately to 1.5 X MAWP3 plus the valves and Swagelok flex tubing are rated well above MAWP3.

Table 4. Component Pressure Ratings

Component	Pressure Rating	Remarks
Valves, Supply and Reclaim Panel	3500 psig	Nupro SS-HBVCR4-P-C
Valves, Chamber Panel	1000 psig	Nupro SS-8BG-VCR-3C
Valves, Chamber discharge	1000 psig	Nupro SS-8BG-VCR-3C
Reclamation Cylinders	2200 psig	Acme Cryogenics
Pressure regulators, S.& R.Panels	3500 psig	Tescom 64-2663KRA10
Pressure regulators, Chmbr Disch	3500 psig	Tescom 64-2663KRH19
Rupture disc, low pressure	157 psig,+/-5%	Zook 306546
Rupture disc, high pressure	2230 psig,+/-5%	Zook 306953
Pressure transducer, low pressure	5000 psig	Bendix C2143000C-834655
Pressure transducer, high pressure	10000 psig	Bendix C214250C-834655
Pressure gage, low pressure	200 psig	Tescom 4802-0200M
Pressure gage, high pressure	3000 psig	Tescom 4802-3000M
Oxygen getter	150 psig	Oxisorb S511-HV
SAES Getter	150 psig	Monotorr Phase 1
Mass flow controller	1500 psig	Brooks 5964C4MAP35KA
VCR plugs, 1/4 in.	5100 psig	Cajon SS-4-VCR-P
VCR caps, 1/4 in.	5100 psig	Cajon SS-4-VCR-CP
VCR caps, 1/2 in.	5100 psig	Cajon SS-8-VCR-CP
VCR gaskets, 1/4 in., unplated, nickel	NA	Cajon NI-4-VCR-2-GR-VS
Welding fittings	5100 psig	Swagelok Microfit
Tubing, 1/4 in.	4140 MSWP	316L, ASTM A269
Tubing, 3/8 in.	2770 MSWP	316L, ASTM A269
Tubing, 1/2 in.	2910 MSWP	316L, ASTM A269

Pressure Testing Preparation

The purpose of the pressure testing is to demonstrate that the overall system is leak tight as assembled and that all panel and interconnect plumbing is pressure safe. The low pressure rupture disc bodies are massive and difficult to open without jeopardizing the integrity of the panel plumbing and the discs themselves so that a buffer array as shown in Fig. 7 will be used to remove any pressure difference on the discs during pressure testing.

Prior to testing it is necessary it is necessary to carry out the following procedures. Please refer to Figs. 2 and 7 for component identification.

First introduction of gas into the system:

The gas should be introduced into the system in stages. The gas handling system is under a slight pressure, a few psi, from when the system was assembled at InSync.

1. The Dirty Gas Bottle should be installed and attached to the supply gas panel with a regulator and CGA flex tube connector
2. Perform a cycle purge on the section of tubing where the bottle was connected. Use the Ar cylinder as a purge gas.
   b) Hook up Ar cylinder with a regulator and CGA hose
   c) Open Valve 11
   d) Crack Ar Cyl and regulator
   e) Cycle Valve 11 a few times ending with Valve 11 open
   f) Close then Crack Ar cyl a few times
   g) Allow Ar to flow for a few minutes
   h) With Ar bleeding off, close Valve 11
   i) Open Ar Cylinder completely
   j) Make sure Regulator is closed
   k) Open Valve 10

The other dirty supply lines should be purged in a similar manner. This will require opening the valves corresponding to V11 which are V21 and V31, closing them as above and opening the V10 equivalents, V20 and V30. When the Ar purge is complete, purge for a few seconds with the gas that is going to be used in the system on that line to clean out any Ar.

3. Proceed to introduce the gas into the rest of the system opening only one valve at a time until you reach the Mass Flow Controller.
4. Make sure the Mass Flow Controller is in the closed position before gas is introduced on the inlet side of the controller. Once gas pressure is built on the inlet side of the Mass Flow Controller, crack the controller open and allow a little gas to flow through, then open the controller slowly until it is full open.
5. Flow gas through the remainder of the system making sure to go thru both the chamber section of tubing and the reclaim sections.
6. Gas should be collected in the reclaim cylinders starting with Reclaim 4 and working back to Reclaim 1. Cryo (LN2) will have to be used to collect the gas in the reclaim cylinders.
7. If necessary, gas can be vented through Valve 95.

Adding a new cylinder of Dirty Gas (at least Research Grade):

1. Ensure all valves (V10-V11-V12, V20-V21-V22, V30-V31-V32) are closed near the cylinder, including the main valve on the cylinder.
2. Remove the old cylinder.
3. Place the new cylinder in the rack and attach the CGA fitting leading to the Gas Handling system.

4. Cycle purge the lines with the following prescription that shows Xe as an example. There should be a bottle of Ar on the system. If you are replacing the Ar cylinder, use the new cylinder of Ar for the cycle purge.
   d) Hook up Xe cylinder with a check valve in the discharge line to prevent inflow
   e) Open Valve 22 (Ar for Cycle Purge)
   f) Ar Cyl should be open. If not, follow cycle purge above to ensure that opening the Ar cyl does not introduce dirt into the system.
   g) Open Valve 22 to introduce gas into the purge line
   h) Open Valve 11
   i) Open Valve 12
   j) Allow Ar to flow and blow the line out
   k) Close Valve 11
   l) Close Valve 12
   m) Close Ar Cyl Valve
   n) Cycle Valve 21
   o) Close Valve 22
   p) Open Valve 11
   q) Crack Xe Cyl open
   r) Close Valve 11
   s) Work Xe Cyl valve open and closed to get dirt out ending in Closed position
   t) Cycle Valve 11 ending in closed position
   u) Open Xe Cyl Valve
   v) Make sure Regulator is Closed
   w) Open valve 10
   x) Now use the regulator to introduce gas into the system

Pressure Testing

The following testing is to be carried out by a Pressure Inspector, a Pressure Installer, a mechanical engineer and the chief experimenter .

Clear the area and put up the signs and barricades.

1. Overall system low pressure test.

Having swept the plumbing in accordance with the previous procedure connect a research grade gas bottle to the Ar supply connection with a regulator and CGA flex hose.

Check that a rupture disc buffer array has been installed which connects the supply panel vent line to the four 157 psig rupture disc discharge connections as shown in Fig. 7.
Check that the source bottle supply and regulator valves are closed.
Check that all valve positions on the control boards show closed.

Check that the four reclamation cylinders are connected to their respective pigtails as shown on the Insync schematic (Fig. 2).
Check that TPC1 is connected between V91 and V96 and that jumpers are connected between V93 and V97 and between V88 and V98.
Check that 3 supply, 2 TPC and 4 reclaim regulators are closed (adjusting handle fully CCW).
Open the source bottle stop valve and set the regulator to 200 psig.
Verify that PT1 and PT2 read zero psig.
Reduce the source pressure to ~20 psig.
Open all valves one at a time except V83, V86 and V95.
This involves a total of 43 numbered valves as follows,

V10, V11, V12, V13, V20, V21, V22, V23, V30, V31, V32, V33, V40, V41, V42, V43, V50, V51, V52, V53, V60, V61, V62, V63, V70, V71, V72, V80, V81, V82, V84, V85, V87, V88, V89, V90, V91, V92, V93, V94, V96, V97, V98,

plus 3 Supply Panel, 4 Reclaim Panel and 2 TPC pressure regulators for an overall total of 52 items.
Raise the source pressure to 50 psig, verify that PT1 and PT2 read 50 psig.
Shut off the source pressure and show that PT1 and PT2 hold 50 psig for 5 minutes.
If there is a leak, leak hunt with an audio leak detector, repair the leak and retest.
Repeat this pressurize, shut off , hold procedure at 100, and 150 psig.
Raise the source pressure to 200 psig, verify that PT1 and PT2 read 200 psig.
Shut off the source pressure and show that PT1 and PT2 hold >195 psig for a period of one hour.
If the pressure falls below 195 psig, shut off the source pressure and vent the system by simultaneously cracking V-Test 1 and V-Test 2 and adjusting them for a pressure drop rate of ~15 psi/ min with the pressure at V-Test 1 kept ~5 to10 psig below that at V-Test 2, repair the leak and return directly to the 200 psig test level for verification.
When the 200 psig test results are satisfactory vent the system in the same way.
Close the 43 numbered valves and the 9 pressure regulators.
Remove the buffer array.

2. Supply Panel Input High Pressure Test

Since the Supply Panel input manifold will be pressurized directly to a bottle pressure MOP of up to 2000 psig in normal operation and since it is not pressure relieved it is necessary to test it to 3300 psig to provide for a MAWP0 of 2200 psig following the 200 psig testing.

Connect a regulated high pressure clean gas source to a Source Panel input station.
Verify that the other two input stations are closed.
Open valves V10, V12, V20, V22, V30 and V32.
Raise the source pressure to 1100 psig and note that the Supply Panel regulator input pressure gages all read 1100 psig.

Shut off the source pressure and show that the input pressure gages hold 1100 psig for 5 minutes.
If there is a leak, leak hunt with an audio leak detector, repair the leak and retest.
Raise the source pressure to 2200 psig
Shut off the source pressure and show that the input pressure gages hold 2200 psig for 5 minutes.
If there is a leak, leak hunt with an audio leak detector, repair the leak and retest.
Raise the source pressure to 3300 psig.
Shut off the source pressure and show that the pressure gages hold >3300 psig for 30 minutes.
Repeat the leak hunt, repair, retest procedure as necessary.
When the 3900 psig test results are satisfactory vent the system by opening V31.
Close V10, V12, V20, V22, V30, V31 and V32.

3. Reclamation Panel High Pressure Test

There is need to check the integrity of the high pressure portion of the Reclamation Panel. The cylinders have been tested to 3300 psig as required for an MAWP3 of 2200 psig. The flex hoses which connect the four cylinders to the panel are rated at 3100 psig. The tubing, pressure transducers and pressure regulators are rated higher than the 3300 psig as is seen in Table 4. The burst discs will fail at MAWP3 within their tolerance band.

Verify that all valves and pressure regulators on the Reclamation Panel are closed.
Fill Reclaim 1 thru the MFC with enough Ar to give 1800 psig plus 0, minus 200 psig when liquefied and equilibrated to room temperature.
The fill sequence is to supply the gas from the Ar Supply connection on the Source Panel, thru the getters and MFC, thru V94, V89, V63, V53, V43, V41, V40 to Reclaim 1.
Close V41 and show that the initial pressure is held within 30 psig over a 30 minute period.
If there is a leak, vent the cylinder at <140 psig thru the V42, V43, V53, V63, V89, V97, V93, V95 path, repair it and retest.
Transfer the gas thru the Reclaim 1 regulator at <140 psig and V42, V43, V51, V50 to Reclaim 2 and repeat the 1800 psig nominal pressure test as above, make up for any residue in Reclaim 1 using the initial fill sequence shown above except replace V43, V41, V40 with V51, V50.
Close V51 and show that the initial pressure is held within 30 psig over a 30 minute period.
If there is a leak, vent as above from Reclaim 2 and retest.
Transfer the gas thru the Reclaim 2 regulator at <140 psig and V52, V53, V61, V60 to Reclaim 3 and repeat the 1800 psig nominal pressure test as above, make up for any residue in Reclaim 2 using the initial fill sequence shown above.
Close V61 and show that the initial pressure is held within 30 psig over a 30 minute period.

If there is a leak, vent as above from Reclaim 3 and retest.
Transfer the gas thru the Reclaim 3 regulator at <140 psig and V62, V63, V71, V70 to Reclaim 4 and repeat the 1800 psig nominal pressure test as above, make up for any residue in Reclaim 3 using the initial fill sequence shown above except replace V63, V53, V43, V41, V40 with V71, V70.
Close V71 and show that the initial pressure is held within 30 psig over a 30 minute period.
If there is a leak, vent as above from Reclaim4 and retest.
If not, vent as above from Reclaim 4.
This concludes the testing._
Close all valves.
Leave the Ar bottle in place.
Remove the signs and barricades.

Labeling

Attach a standard LLNL pressure test label to the Gas Supply Valve Control Panel as follows,

ASSY Gamma Ray Imager

SAFETY NOTE MESN99-038-0A

MAWP Varies, see labels

FLUID Ar, Xe, CO2

TEMP varies, see labels

REMARKS Restricted use

TEST NO. (Supplied by tester)

BY DATE

Attach standard LLNL pressure test labels to each of the four reclamation cylinders and to each of the four valve panels as follows,

ASSY Reclamation Cylinder No. 1, 2, 3, 4

SAFETY NOTE MESN99-038-0A

MAWP3 2200 psig

FLUID Ar, Xe, CO2

TEMP 77 K to 50 C

REMARKS Restricted use

TEST NO. (Supplied by tester)

BY DATE

ASSY Gas Supply Panel Input, PN 10E0804-01

SAFETY NOTE MESN99-038-0A

MAWP0 2200 psig

FLUID Ar, Xe, CO2

TEMP 10 C to 50C

REMARKS Restricted use

TEST NO. (Supplied by tester)

BY DATE

ASSY Gas Supply Panel Output, PN 10E0804-01

SAFETY NOTE MESN99-038-0A

MAWP1 150 psig

FLUID Ar, Xe, CO2

TEMP 10 C to 50C

REMARKS Restricted use

TEST NO. (Supplied by tester)

BY DATE

ASSY Gas Reclamation Panel Input, PN 10E0804-02

SAFETY NOTE MESN99-038-0A

MAWP1 150 psig

FLUID Ar, Xe, CO2

TEMP 10 C to 50C

REMARKS Restricted use

TEST NO. (Supplied by tester)

BY DATE

ASSY Gas Processing Panel, PN 10E0804-03

SAFETY NOTE MESN99-038-0A

MAWP1 150 psig

FLUID Ar, Xe, CO2

TEMP 10C to 50 C

REMARKS Restricted use

TEST NO. (Supplied by tester)

BY DATE

ASSY Detector Chambers Fill Panel, PN 10E0804-04

SAFETY NOTE MESN99-038-0A

MAWP1 150 psig

FLUID Ar, Xe, CO2

TEMP -20C to 50 C

REMARKS Restricted use

TEST NO. (Supplied by tester)

BY DATE

Associated Procedures

1. OSP 132S.31

References

1. Chapter 32 - Pressure, Supplements 32.03 - Pressure Vessel and System Design and 32.05 - Pressure Testing, LLNL Health & Safety Manual
2. S. Timoshenko, Strength of Materials, Part 2, D. Van Nostrand, 1941, 239
3. S. Timoshenko, Strength of Materials, Part 2, Krieger, 1976, 454
4. Aerospace Structural Metals Handbook, Volume 2, DOD/Battelle, 1995

5. B-132S Facility Safety Procedure (FSP-132S)

6. LLNL Environmental Compliance Manual

7. LLNL Training Program Manual

8. Design Safety Standards Manual, ME Department, LLNL

Fig. 1 System Layout

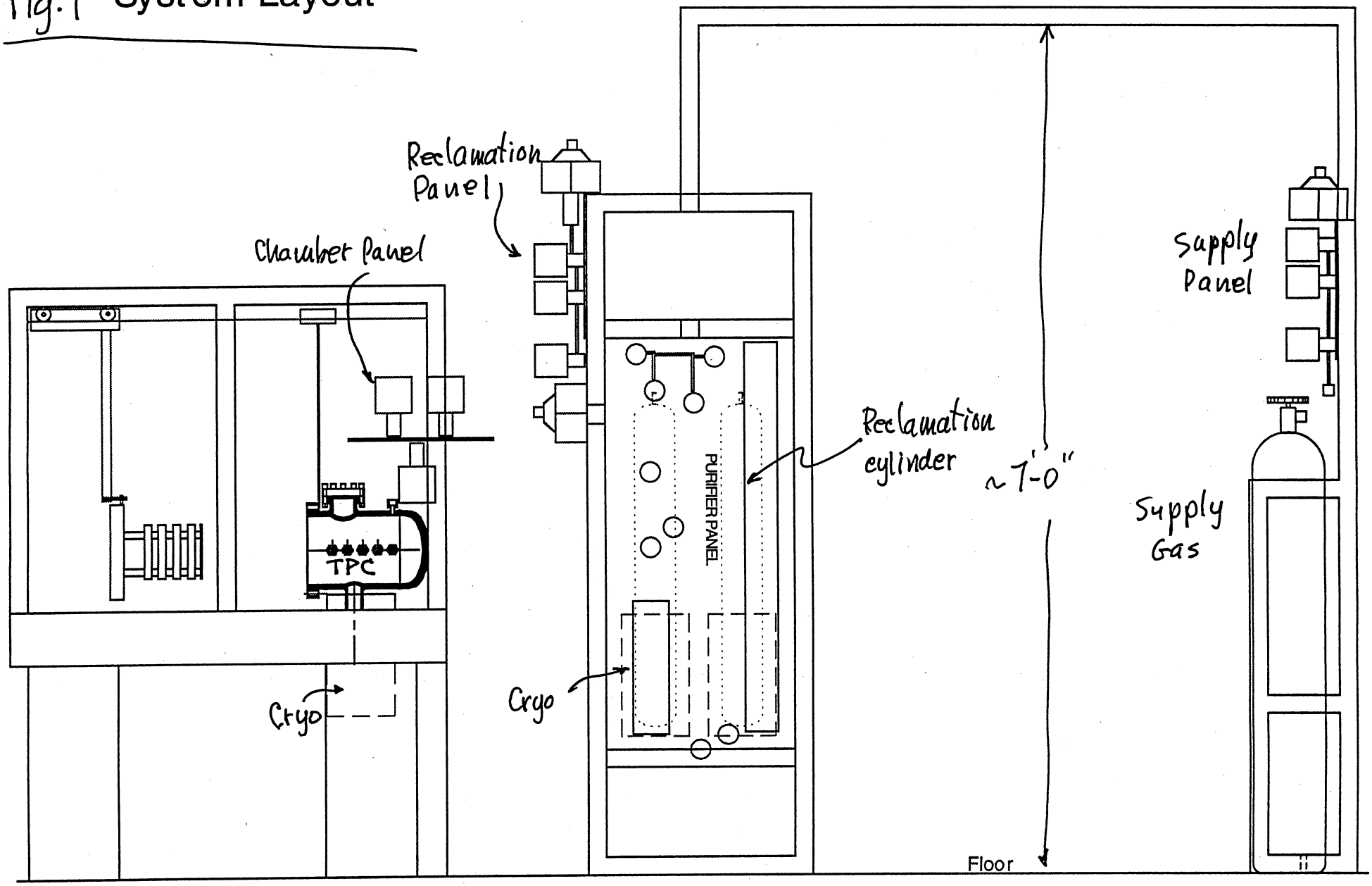

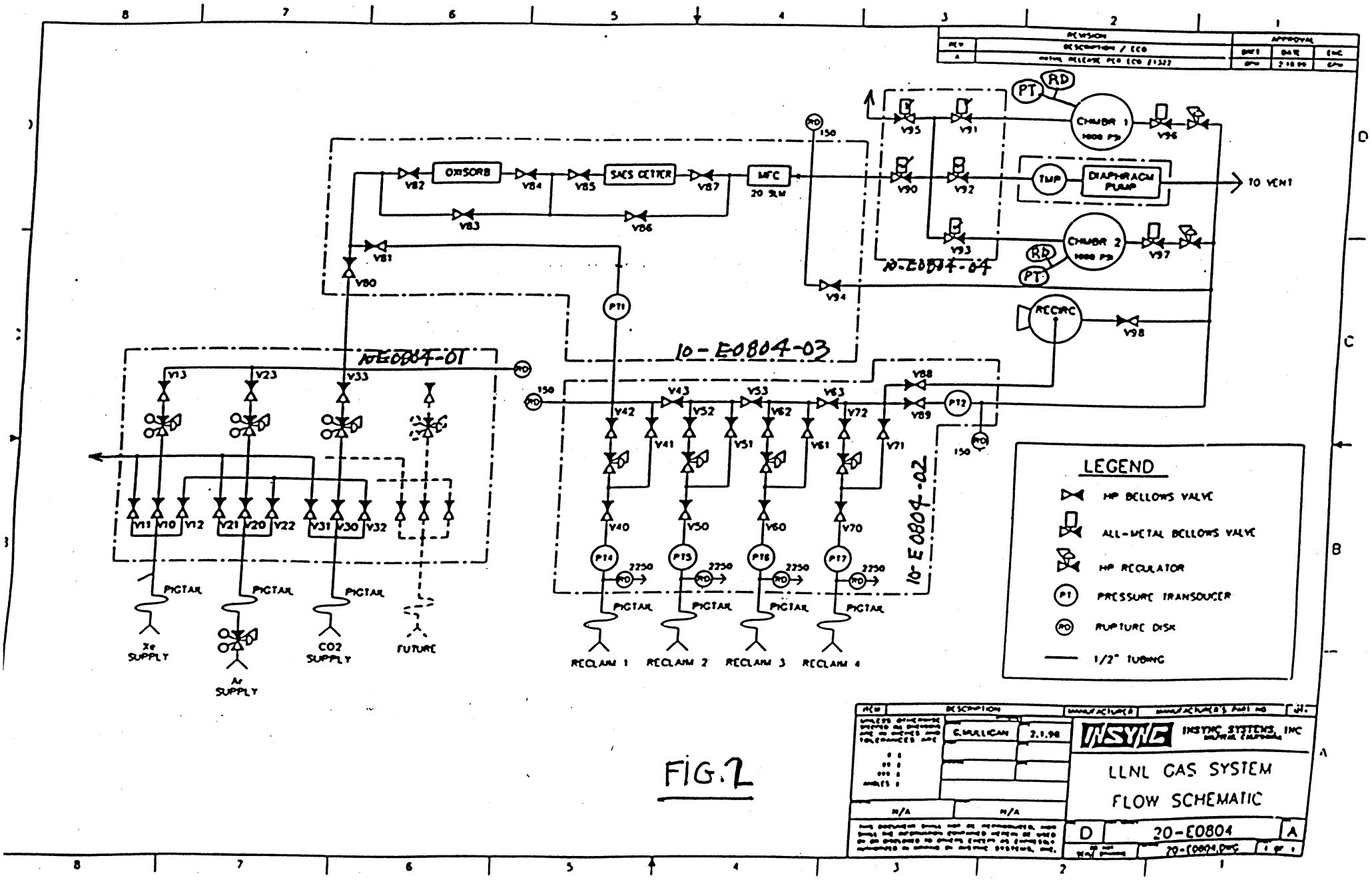
OXISORB
SACS CETTER
MFC
20 SLM
CHAMBER 1
CHAMBER 2
DIAPHRAGM PUMP
TMP
RECIRC
TO VENT
10-E0804-04
10-E0804-03
10-E0804-01
10-E0804-02
PIGTAIL
Xe SUPPLY
Ar SUPPLY
CO2 SUPPLY
FUTURE
RECLAIM 1
RECLAIM 2
RECLAIM 3
RECLAIM 4
LEGEND
HP BELLOWS VALVE
ALL-METAL BELLOWS VALVE
HP REGULATOR
PRESSURE TRANSDUCER
RUPTURE DISK
1/2" TUBING
INSYNC SYSTEMS, INC
LLNL GAS SYSTEM
FLOW SCHEMATIC
20-E0804

FIG. 2

REVISION		APPROVAL		
REV	DESCRIPTION / ECO	DRFT	DATE	ENG
A	INITIAL RELEASE PER ECO 1322	ODN	1/20/99	GPM
B	MOD BOM PER ECO 1341	GPM	3/4/99	GPM

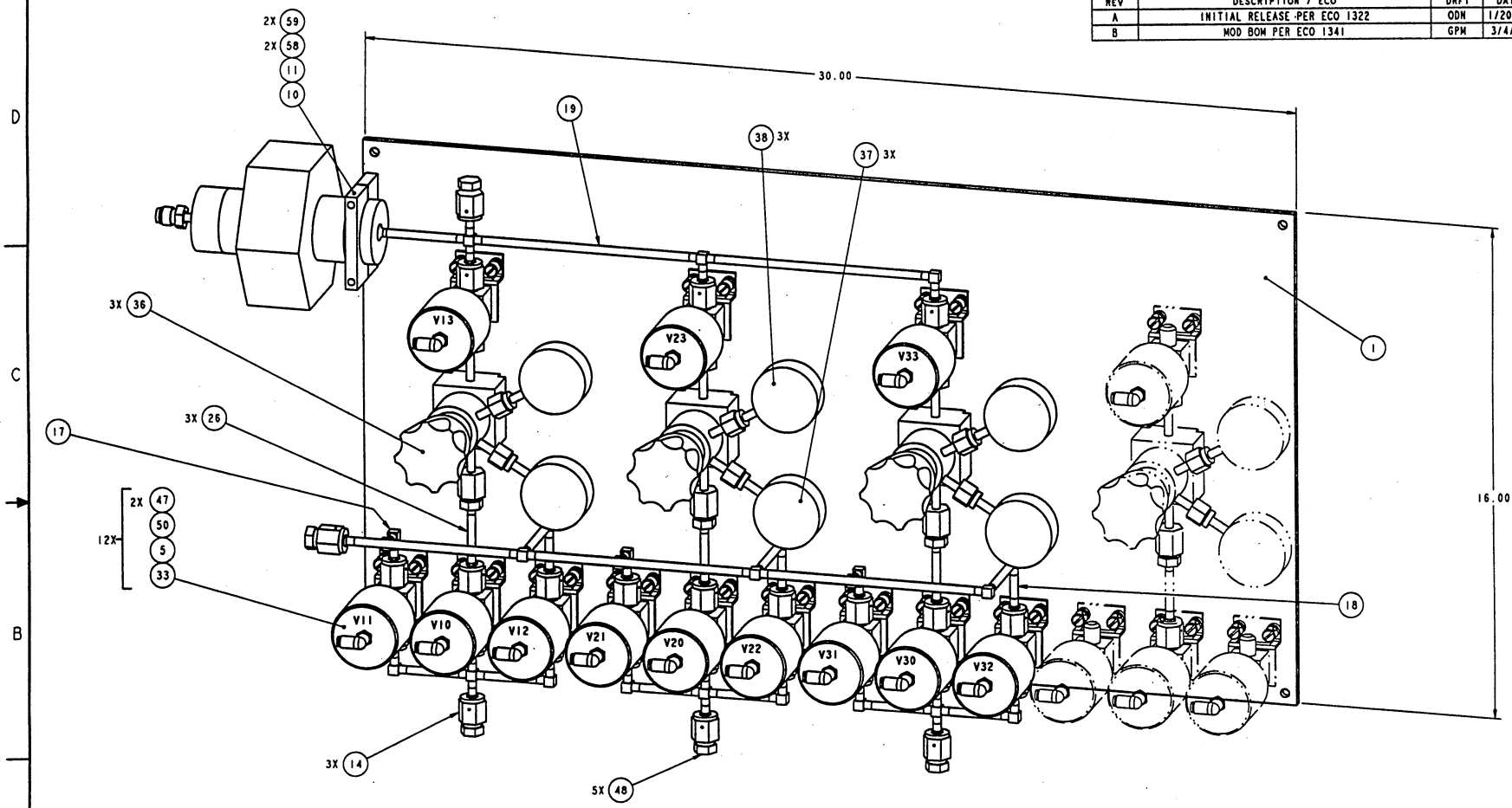

10-E0804-01

FIG. 3

UNLESS OTHERWISE SPECIFIED: ALL DIMENSIONS ARE IN INCHES AND TOLERANCES ARE: .X ± 0.1, .XX ± 0.01, .XXX ± 0.001, ANGLES ± 0.5	APPROVALS: DRAWN D. NOYES 1/19/98; ENGR G.MULLIGAN 1/20/98; CHECKED J. ANDERSON 1/20/98	INSYNC SYSTEMS, INC. MILPITAS, CALIFORNIA	
MATERIAL SEE BOM	FINISH SEE NOTES	ASSY, XENON DELIVERY SYSTEM, LAWRENCE LIVERMORE NATL LAB	
THIS DOCUMENT SHALL NOT BE REPRODUCED, NOR SHALL THE INFORMATION CONTAINED HEREIN BE USED BY OR DISCLOSED TO OTHERS EXCEPT AS EXPRESSLY AUTHORIZED IN WRITING BY INSYNC SYSTEMS, INC.		SIZE D; PART NUMBER 10-E0804; REV B	
		DO NOT SCALE DRAWING; FILENAME 10-E0804; SHEET 1 OF 4	

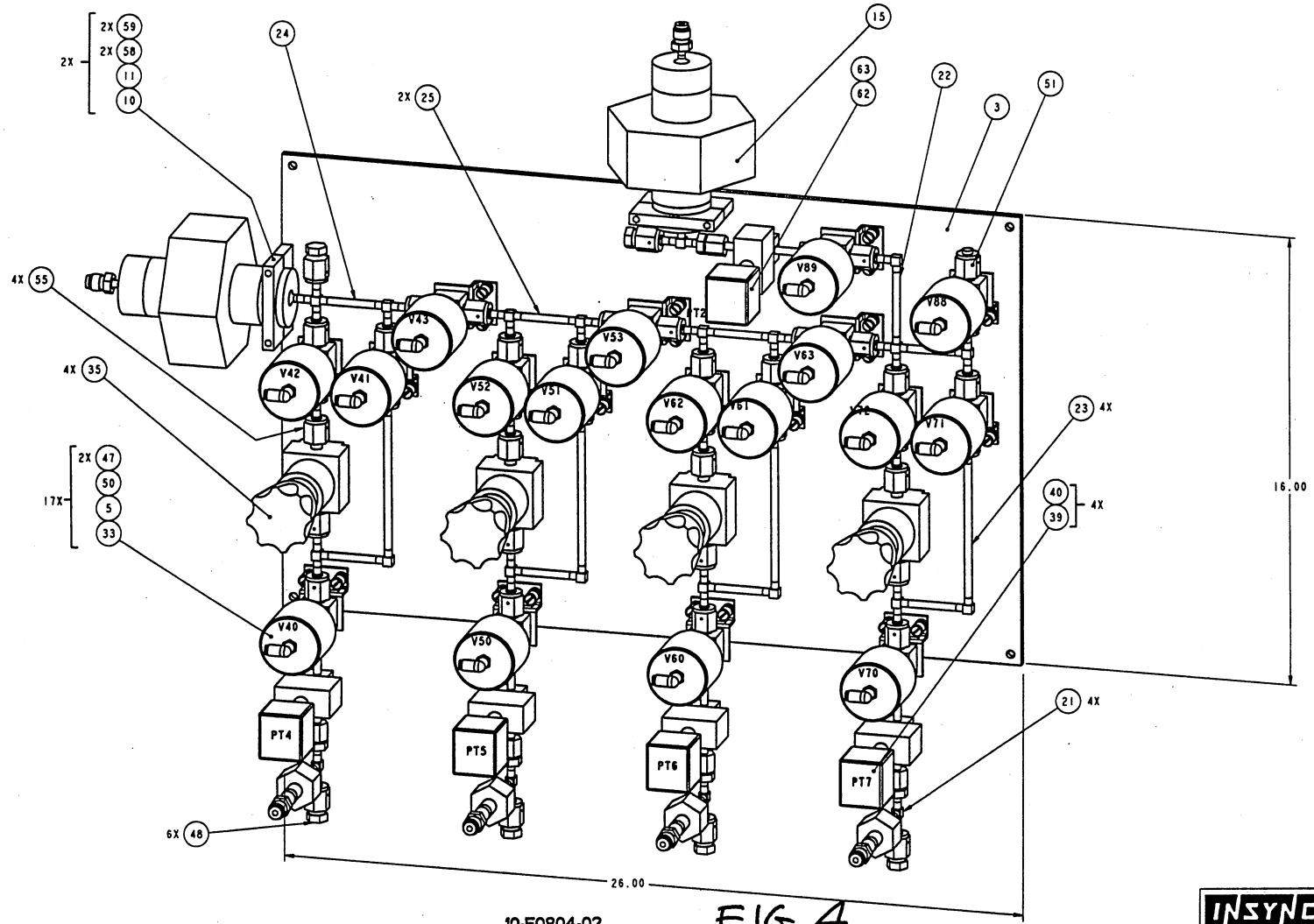

10-E0804-02

FIG. 4

INSYNC SYSTEMS, INC.
MILPITAS, CALIFORNIA

THIS DOCUMENT SHALL NOT BE REPRODUCED, NOR SHALL THE INFORMATION CONTAINED HEREIN BE USED BY OR DISCLOSED TO OTHERS EXCEPT AS EXPRESSLY AUTHORIZED IN WRITING BY INSYNC SYSTEMS, INC.

SIZE	PART NUMBER	REV
D	10-E0804	B
DO NOT SCALE DRAWING	FILENAME 10-E0804	SHEET 2 OF 4

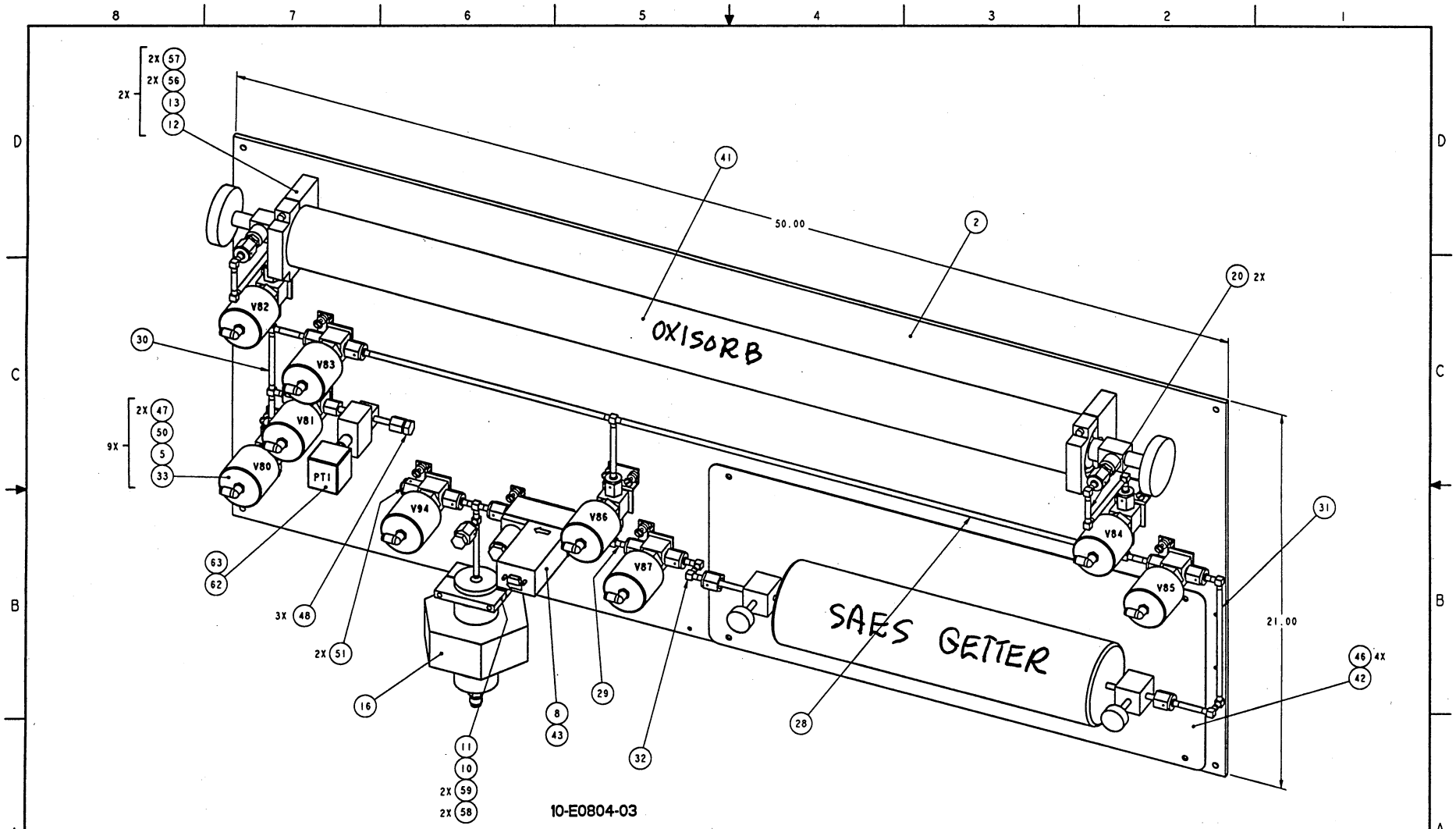

FIG. 5

INSYNC SYSTEMS, INC.
MILPITAS, CALIFORNIA

THIS DOCUMENT SHALL NOT BE REPRODUCED, NOR SHALL THE INFORMATION CONTAINED HEREIN BE USED BY OR DISCLOSED TO OTHERS EXCEPT AS EXPRESSLY AUTHORIZED IN WRITING BY INSYNC SYSTEMS, INC.

SIZE	PART NUMBER	REV
D	10-E0804	B
DO NOT SCALE DRAWING	FILENAME 10-E0804	SHEET 3 OF 4

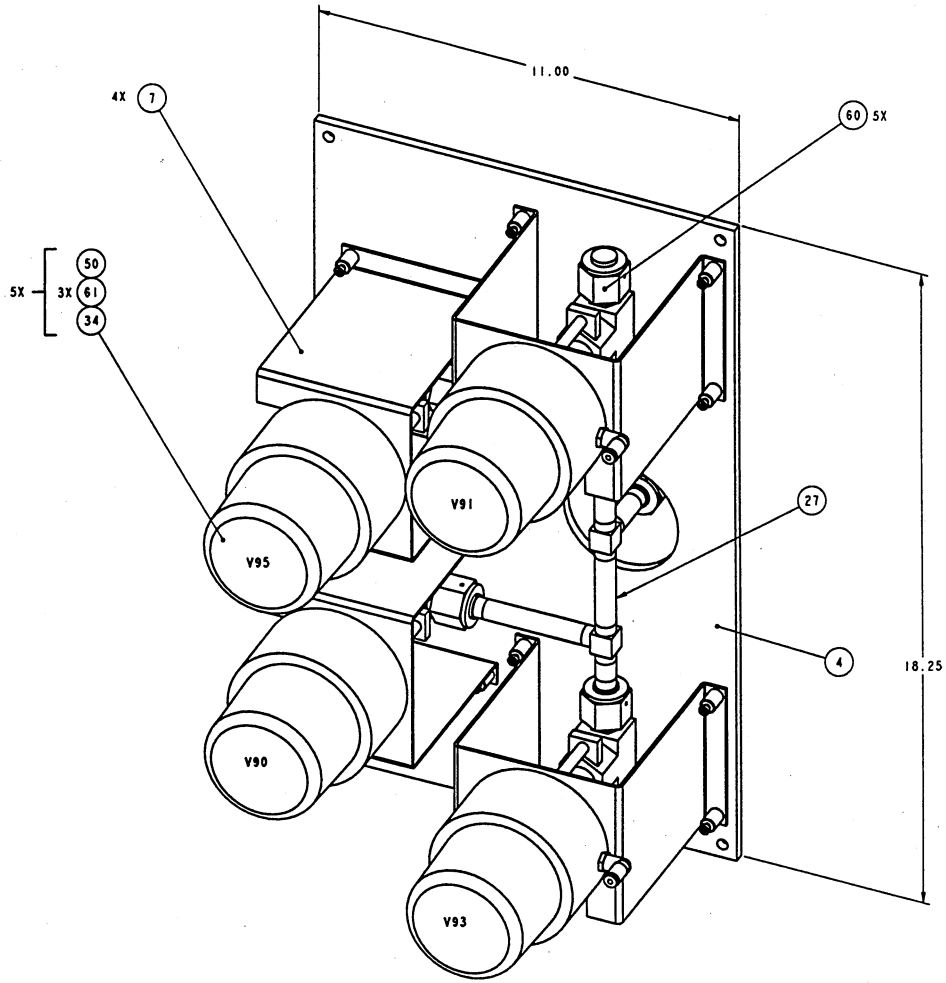

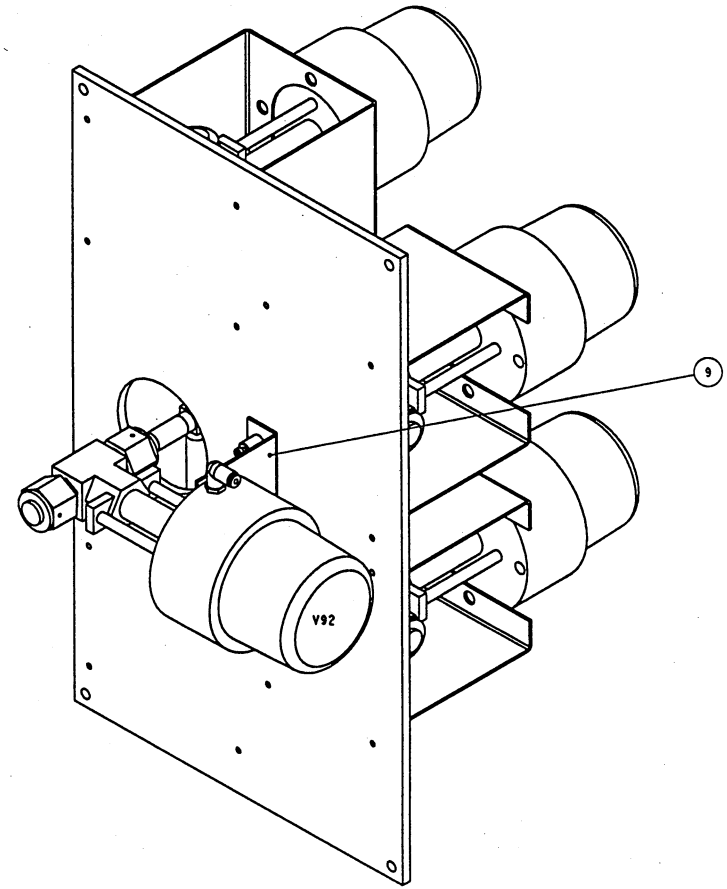

10-E0804-04

FIG. 6

INSYNC SYSTEMS, INC.
MILPITAS, CALIFORNIA

THIS DOCUMENT SHALL NOT BE REPRODUCED, NOR SHALL THE INFORMATION CONTAINED HEREIN BE USED BY OR DISCLOSED TO OTHERS EXCEPT AS EXPRESSLY AUTHORIZED IN WRITING BY INSYNC SYSTEMS, INC.

SIZE	PART NUMBER	REV
D	10-E0804	B
DO NOT SCALE DRAWING	FILENAME 10-E0804	SHEET 4 OF 4

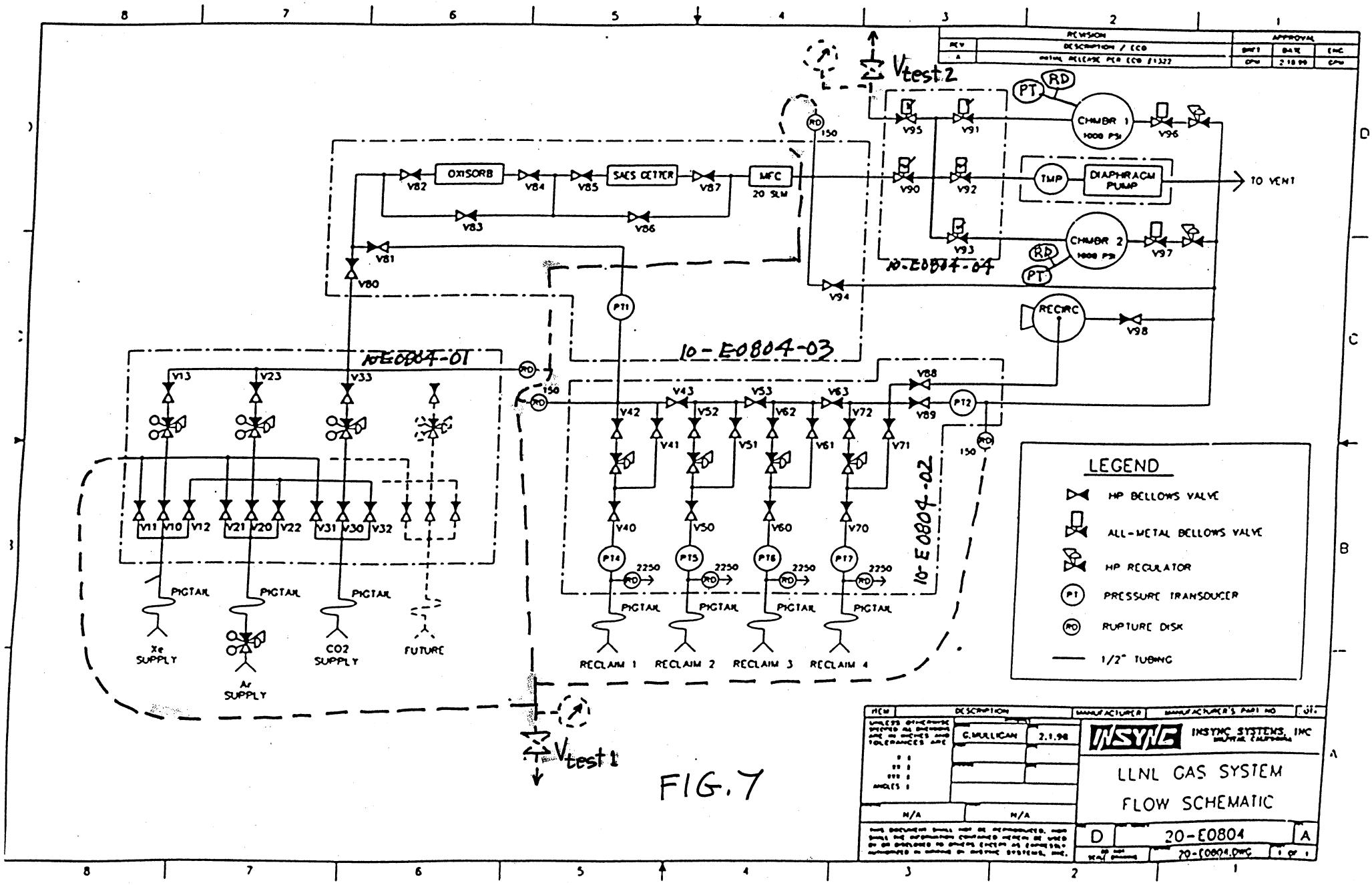
REVISION
REV
DESCRIPTION / ECO
A
INITIAL RELEASE PER ECO 11327
APPROVAL
DRFT
DATE
ENG
CPW
2.18.98
CPW
Vtest 2
PT
RD
CHMBR 1
1000 PSI
V95
V91
V96
OXISORB
V82
V84
SAES GETTER
V85
V87
MFC
20 SLM
V90
V92
TMP
DIAPHRAGM PUMP
TO VENT
V83
V86
V93
CHMBR 2
1000 PSI
V97
V81
V80
V94
10-E0804-04
RECIRC
V98
PT1
10-E0804-03
10-E0804-01
V13
V23
V33
V88
V43
V53
V63
V42
V52
V62
V72
V89
PT2
V41
V51
V61
V71
V11
V10
V12
V21
V20
V22
V31
V30
V32
V40
V50
V60
V70
PT4
PT5
PT6
PT7
2250
10-E0804-02
PIGTAIL
Xe SUPPLY
Ar SUPPLY
CO2 SUPPLY
FUTURE
RECLAIM 1
RECLAIM 2
RECLAIM 3
RECLAIM 4
LEGEND
HP BELLOWS VALVE
ALL-METAL BELLOWS VALVE
HP REGULATOR
PRESSURE TRANSDUCER
RUPTURE DISK
1/2" TUBING
Vtest 1
ITEM
DESCRIPTION
MANUFACTURER
MANUFACTURER'S PART NO
QT.
C. MULLIGAN
2.1.98
INSYNC
INSYNC SYSTEMS, INC
LLNL GAS SYSTEM
FLOW SCHEMATIC
N/A
N/A
D
20-E0804
A
20-E0804.DWG
1 OF 1

FIG. 7

4 ACME CRYOGENICS

APPENDIX A

FINAL INSPECTION AND TEST REPORT

ITEM NO. 225-819633 DESCRIPTION LIVERMORE LABS PRESSURE VESSEL

SHOP ORDER NO. M058560 SERIAL NO. 15473, 15474, 15475, 15476

PRESSURE TEST

TYPE TEST: PNEUMATIC ✓ HYDROSTATIC — CIRCUIT: —

PROOF TESTED AT FULL TEST PRESSURE OF 3300 PSIG WITH N2

AND HELD FOR 10 MINUTES/ — HOURS; PRESSURE THEN REDUCED TO ____ PSIG FOR EXAMINATION FOR LEAKS.

SAFETY RELIEF VALVE SET AT N/A PSIG; PRESSURE SWITCH SET AT N/A

TEST PROCEDURE NO. — TESTED BY ACME 04-23 CRYOGENICS TEST DATE 3/8/99

FINAL INSPECTION

	INSP. STAMP
ALL PROCESS & INSTRUMENT LINES STRAIGHT, LEVEL & PLUMB	ACME 04-23 CRYOGENICS
ALL REQUIRED COMPONENTS INSTALLED, IN PROPER LOCATION, AND FLOW DIRECTIONS IS CORRECT	ACME 04-23 CRYOGENICS
ALL WELDS MEET QUALITY STDS. OF Q-113	ACME 04-23 CRYOGENICS
ALL BRAZED JOINTS-EVIDENCE OF COMPLETE BOND AROUND ENTIRE JOINT (360°)	N/A
PAINTED SURFACES SMOOTH & UNIFORM, FULL COVERAGE, NO RUNS OR SAGS, TOUCHED-UP WHERE REQUIRED	N/A
ALL REQUIRED TAGS & NAMEPLATES IN PLACE & CORRECT PER DRAWING	ACME 04-23 CRYOGENICS
FUNCTIONAL TEST PERFORMED	ACME 04-23 CRYOGENICS

PREPARATION FOR SHIPMENT

	INSP. STAMP
ALL OPEN PORTS CLOSED/SEALED TO PREVENT CONTAMINATION	
ALL TEMPORARY & FLO-PEN MARKINGS HAVE BEEN REMOVED	
ALL GROSS STAINS & DISCOLORATION REMOVED FROM PIPING & FRAMES	
EQUIPMENT CLEANED FOR SHIPMENT (WIPED DOWN)	

SYSTEM PRESSURIZED TO ____ PSIG FOR SHIPMENT (SHOW EXACT PRESSURE, TEMP., DATE & TECHNICIAN'S INITIALS ON TAG ATTACHED TO EQUIPMENT). N/A

THIS EQUIPMENT MEETS ALL ABOVE REQUIREMENTS AND IS APPROVED FOR SHIPMENT

Scott L. — QUALITY CONTROL TECHNICIAN

3/9/99 — DATE

TABLE 1A
SECTION I; SECTION III, CLASS 2 AND 3;* AND SECTION VIII, DIVISION 1 MAXIMUM ALLOWABLE STRESS VALUES S FOR FERROUS MATERIALS
(*See Maximum Temperature Limits for Restrictions on Class)

Line 17 Page 70-71

Addenda	...
Nominal Composition	16Cr - 12Ni - 2Mo
Product Form	Smls. pipe
Spec. No.	SA-312
Type/ Grade	TP316L
Alloy Desig./ UNS No.	S31603
Class/ Cond./ Temper	...
Size/ Thickness, in.	...
P-No.	8
Group No.	1
Min. Tensile Strength, ksi	70
Min. Yield Strength, ksi	25
Applic. and Max. Temp. Limits (NP = Not Permitted) (SPT = Supports Only)	
I	NP
III	NP
VIII-1	850
External Pressure Chart No.	HA-4
Notes	...

Line 17 Page 72

Maximum Allowable Stress, ksi (Multiply by 1000 to Obtain psi), for Metal Temperature, °F, Not Exceeding

-20 to 100	16.7	950	...
150	...	1000	...
200	14.1	1050	...
250	...	1100	...
300	12.7	1150	...
400	11.7	1200	...
500	10.9	1250	...
600	10.4	1300	...
650	10.2	1350	...
700	10.0	1400	...
750	9.8	1450	...
800	9.6	1500	...
850	9.4	1550	...
900	...	1600	...
		1650	...

General Notes

(a) The following are the abbreviations used for Product Forms: (a) Wld. - Welded; (b) Smls. - Seamless.

(b) The stress values in this Table may be interpolated to determine values for intermediate temperatures.

(c) When used for Section III Class MC design, the stress values listed herein shall be multiplied by a factor of 1.1 (NE-3112.4); these values shall be considered as design stress intensities or allowable stress values as required by NE-3200 or NE-3300, respectively.

(d) For Section VIII applications, stress values in restricted shear such as dowel bolts or similar construction in which the shearing member is so restricted that the section under consideration would fail without reduction of area shall be 0.80 times the values in the above Table.

(e) For Section VIII applications, stress values in bearing shall be 1.60 times the values in the above Table.

(f) Stress values for -20 to 100°F are applicable for colder temperatures when toughness requirements of Section III or Section VIII are met.

Min Allowable Tensile Stress

Allowable Stress used in ASME BPV Code Section VIII Div. 1 Calculations

$$\frac{70}{16.7} > 4 \text{ Safety Factor}$$

This report derived from 1998 ASME Boiler & Pressure Vessel Code Stress Tables. ©1998 ASME International.
It is for this record only.

APPENDIX B

ACME Cryogenics, Inc.
Pressure Vessel Calculations for:

Lawrence Livermore Labs Pressure Vessel
S/O: M058560, qty (4) ea

Vessel Description:
4" dia. x 36 OAL vessel w/(1) nozzle

Design Code:
ASME Boiler & Pressure Vessel Code Sect. VIII, Div. 1
1998 Edition

Special Notes: Vessel designed w/ SF=4 as is standard with code.

Design Engineer: A. Halsey Date: 1/15/99
Engineer Review: [illegible], PE Date: 1/26/99

NOTE: ASME Sect 8, Div 1 uses Met'l allowable stresses = Min. tensile stress/4 ∴ 4:1 S.F. is met.

C:\COMPRESS\DATA\QUOTES\PATERSON.VSL May 12, 1999

TABLE OF CONTENTS

Pressure Summary 1
Thickness Summary 2
TOP HEAD 3
SHELL 4
BOTTOM HEAD 5
N1 6

Total Pages In This Report 7

C:\COMPRESS\DATA\QUOTES\PATERSON.VSL May 12, 1999

Pressure Summary

Pressure summary for pressure chamber 1

Identifier	P design (psi)	T design (deg F)	MAWP (psi)	MAP (psi)	Pe external (psi)	UG-99 Ratio	UCS-66 MDMT (deg F)	UCS-66 Exemption or Stress Reduction	Corrosion Allowance (in)
TOP HEAD	3000.0	158.0	3869.3	4253.4	0.0	1.099		Not applicable	0.000
SHELL	3000.0	158.0	3095.6	3402.9	0.0	1.099		Not applicable	0.000
BOTTOM HEAD	3000.0	158.0	3869.3	4253.4	0.0	1.099		Not applicable	0.000
N1	3000.0	158.0	3000.0	3000.0	0.0	1.000		Not applicable	0.000

Vessel MAWP hot & corroded is 3000 psi @ 158 degrees F.

Vessel MAP new & cold is 3000 psi @ 70 degrees F.

Vessel is not designed for external pressure.

Hydrotest pressure calculation based on MAWP

= 1.5*MAWP*1 = 4500 psi OR PNEUMATIC = 1.25 X MAWP X 1 = 3750 psi

Vessel hydrotest pressure, horizontal position is 4500 psi.

Design notes:

Minimum thickness is 1/16 inch per UG-16(b).
Corrosion weight loss is 100% of theoretical loss.
UG-23 stress increase is 1.2.
Test liquid specific gravity is 1.
Minimum nozzle outside projection 1 inches.
Maximum stress allowed during field hydrotest is 90% of yield.
Butt weld thickness transitions made by removing material.
P-No 1 material >1.25 to 1.5 in. thick is preheated (UCS-56).
Interpretation VIII-1-83-66 has been applied.

C:\COMPRESS\DATA\QUOTES\PATERSON.VSL May 12, 1999

Thickness Summary

Component Identifier	Dia (in)	Length (in)	Nom t (in)	Req t (in)	Joint E	Load	Governing Status	Stress	Deflect (in)
Top head	4.50 od		0.5310*	0.4323	0.85	internal			
Shell	4.50 od	30.00	0.5625	0.4783	0.85	internal			
Bottom head	4.50 od		0.5310*	0.4323	0.85	internal			

Nom t - vessel wall thickness
Req t - required vessel thickness due to governing loading + corrosion
E - longitudinal seam joint efficiency
* - head minimum thickness

Load:
internal - circ stress due to internal pressure governs
external - external pressure governs
wind - combined long stress due to STATUS + wind governs
seismic - combined long stress due to STATUS + seismic governs

C:\COMPRESS\DATA\QUOTES\PATERSON.VSL May 12, 1999

TOP HEAD

ASME Section VIII Division 1, 1998 Edition

Component: 2:1 head
Material specification: SA 182 F316L LOW <=5"

Internal design pressure: P = 3000 psi @ 158 deg F

Corrosion allowance: Inner C = 0 Outer= 0 in

PWHT is not performed

Radiography: Category A joints - Seamless NO X-Ray
Head to shell seam - None UW-11(c) type 1

Estimated weight: new = 8.7 corr = 8.7 lb
capacity: new = .1 corr = .1 US ga

OD = 4.5 t = .531 (min) flange= 1.5 forming= 0 in (new)

Design thickness: (At 158 deg F) Appendix 1-4(c)

t = P*Do*K/(2*S*E + 2*P*(K-0.1)) + Corrosion + fa
= 3000*4.5*1/(2*15192*0.85 + 2*3000*(1-0.1)) + 0 + 0
= 0.4323 in

MAP: (New & at 70 deg F) Appendix 1-4(c)

P = 2*S*E*t/(K*Do - 2*t*(K-0.1)) - Ps
= 2*16700*0.85*0.531/(1*4.5 - 2*0.531*(1-0.1)) - 0
= 4253.454 psi

MAWP: (Corroded & at 158 deg F) Appendix 1-4(c)

P = 2*S*E*t/(K*Do - 2*t*(K-0.1)) - Ps
= 2*15192*0.85*0.531/(1*4.5 - 2*0.531*(1-0.1)) - 0
= 3869.369 psi

UG-32(l) Minimum Straight Flange Thickness

Design thickness: (At 158 deg F) Appendix 1-1(a)

t = P*Ro/(S*E + 0.4*P) + Corrosion
= 3869.369*2.25/(15192*0.85 + 0.4*3869.369) + 0
= 0.602 in

SHELL

ASME Section VIII Division 1, 1998 Edition

Component: Cylinder
Material specification: SA 312 TP316L SMLS LOW (pipe)

Internal design pressure: P = 3000 psi @ 158 deg F

Corrosion allowance: Inner C = 0 Outer= 0 in

PWHT is not performed

Radiography: Category A joints - Seamless NO X-Ray
Category B joints - None UW-11(c) type 1

Estimated weight: new = 60.5 corr = 60.5 lb
capacity: new = 1.162 corr = 1.162 US ga

OD = 4.5 length Lc= 30 t = 0.5625 in (nominal, new)

Design thickness: (At 158 deg F) Appendix 1-1(a)

t = P*Ro/(S*E + 0.4*P) + Corrosion
= 3000*2.25/(15192*0.85 + 0.4*3000) + 0
= 0.4783 in

MAP: (New & at 70 deg F) Appendix 1-1(a)

P = S*E*t/(Ro - 0.4*t) - Ps
= 16700*0.85*0.4921875/(2.25 - 0.4*0.4921875) - 0
= 3402.911 psi

MAWP: (Corroded & at 158 deg F) Appendix 1-1(a)

P = S*E*t/(Ro - 0.4*t) - Ps
= 15192*0.85*0.4921875/(2.25 - 0.4*0.4921875) - 0
= 3095.63 psi

BOTTOM HEAD

ASME Section VIII Division 1, 1998 Edition

Component: 2:1 head
Material specification: SA 182 F316L LOW <=5"

Internal design pressure: P = 3000 psi @ 158 deg F

Corrosion allowance: Inner C = 0 Outer= 0 in

PWHT is not performed

Radiography: Category A joints - Seamless NO X-Ray
Head to shell seam - None UW-11(c) type 1

Estimated weight: new = 8.7 corr = 8.7 lb
capacity: new = .1 corr = .1 US ga

OD = 4.5 t = .531 (min) flange= 1.5 forming= 0 in (new)

Design thickness: (At 158 deg F) Appendix 1-4(c)

```
t = P*Do*K/(2*S*E + 2*P*(K-0.1)) + Corrosion + fa
  = 3000*4.5*1/(2*15192*0.85 + 2*3000*(1-0.1)) + 0 + 0
  = 0.4323 in
```

MAP: (New & at 70 deg F) Appendix 1-4(c)

```
P = 2*S*E*t/(K*Do - 2*t*(K-0.1)) - Ps
  = 2*16700*0.85*0.531/(1*4.5 - 2*0.531*(1-0.1)) - 0
  = 4253.454 psi
```

MAWP: (Corroded & at 158 deg F) Appendix 1-4(c)

```
P = 2*S*E*t/(K*Do - 2*t*(K-0.1)) - Ps
  = 2*15192*0.85*0.531/(1*4.5 - 2*0.531*(1-0.1)) - 0
  = 3869.369 psi
```

UG-32(1) Minimum Straight Flange Thickness

Design thickness: (At 158 deg F) Appendix 1-1(a)

```
t = P*Ro/(S*E + 0.4*P) + Corrosion
  = 3869.369*2.25/(15192*0.85 + 0.4*3869.369) + 0
  = 0.602 in
```

N1

Opening N1 Reinforcement Calculations Per UG-37

Located on:	TOP HEAD
Local vessel thickness:	.531 in
Liquid static head included:	0 psi
Flange description:	Not installed
Nozzle material specification:	SA 479 316L HIGH
Nozzle orientation:	0 degrees
End of nozzle to datum line:	-4.5 in
Nozzle calculated as hillside:	no
Projection outside vessel Lpr:	1.884711 in

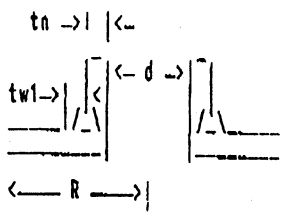

corrosion allow = 0 in
noz thick new tn= .181 in
nozzle id. new d= .18 in
fillet weld tw1 = .25 in

To head center R= 0 in

Reinforcement Calculations For Nozzle MAWP

Limits of reinforcement UG-40

Parallel to the vessel wall (Rn + tn + t) = .812 in
Normal to the vessel wall outside 2.5*(tn-Cn) + te = .4775 in
Normal to the vessel wall inside 2.5*(tn-Cn-C) = .4775 in

Nozzle required thickness

trn = P*Rn/(Sn*E - 0.6*P)
= 3000*0.09/(16700*1 - 0.6*3000)
= 0.0181 in

Required thickness tr from UG-37(a)(3)

tr= P*K1*D/(2*S*E - 0.2*P)
= 3000*0.9*3.438/(2*15192*1 - 0.2*3000)
= 0.3117 in

Opening does not require reinforcement per UG-36(c)(3)(a)

Check the welds - From UW-16(c):

Fillet weld: tmin = lesser of 0.75 or tn or t, tmin = 0.191 in
tc(min) = lesser of 0.25 or 0.7*tmin, tc(min) = 0.1337 in
tc(actual) = 0.7*Leg = 0.7*0.25 = 0.175 in

The fillet weld size is satisfactory.

Weld strength calculations are not required for this detail which conforms to Fig. UW-16.1, sketch (a).

UG-45 Nozzle Neck Thickness Check

Wall thickness per UG-45(a):	tr1 = 0.0181 in (E = 1)
Wall thickness per UG-45(b)(1):	tr2 = 0.3463 in
Wall thickness per UG-16(b):	tr3 = 0.0625 in
Std pipe wall per UG-45(b)(4):	tr4 = 0.079625 in
The greater of tr2 or tr3:	tr5 = 0.3463 in
The lesser of tr4 or tr5:	tr6 = 0.079625 in

Req'd per UG-45 is the larger of tr1 or tr6 = 0.079625 in

N1

Available nozzle wall thickness new, tn = 0.191 in

The nozzle neck thickness is adequate for MAWP.

Exempt from weld strength calculations per UW-15(b)(2)

VCR fitting:

Nozzle circ. stress:

$$P = \frac{S \cdot E \cdot t}{R + .6 \cdot t}$$

SA479-316L
S = 16700 psi @ 158°F
E = 1
t = .035"
R_i = .18/2 = .09

$$P = \frac{(16700)(1)(.035)}{.09 + .6(.035)}$$

= 5266 psi ≥ 3000 psi ∴ ok

APPENDIX C

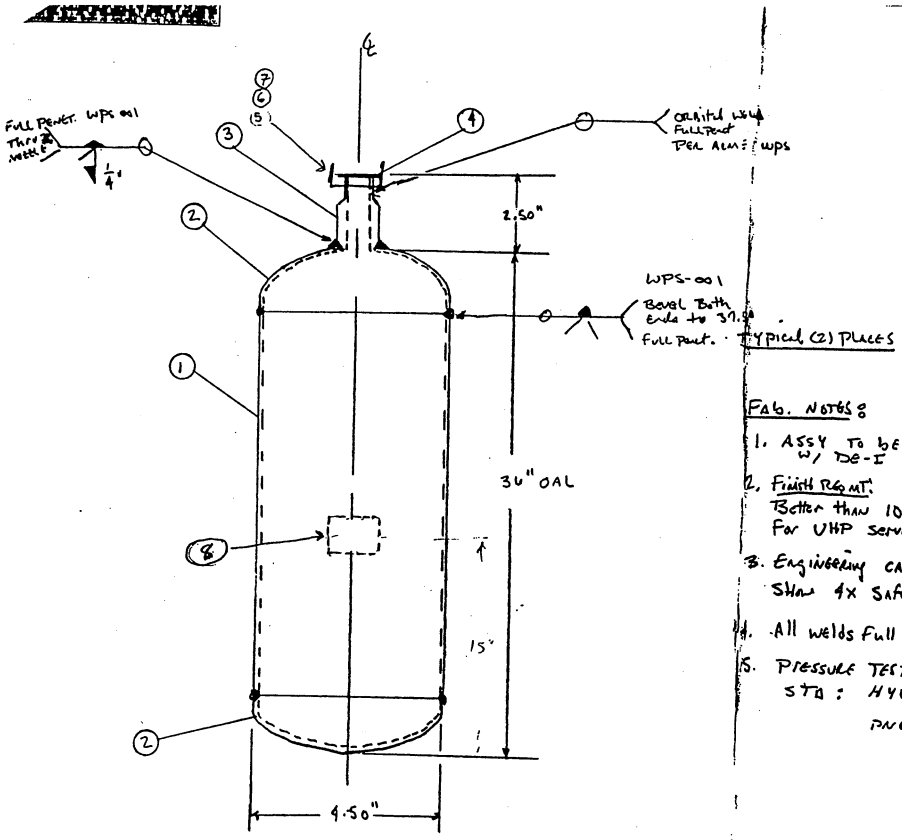

BILL OF MATERIALS					DWG. NO. 2-2
ACME PART NO.	ITEM	QTY	UNITS	DESCRIPTION	MATERIAL
270-819343	1	A/R	FT	Pipe 4" Sch 160, SMLS	SA312-316L
270-819704	2	2	EA	Pipe Cap, 4" Sch 160	SA182-F316L
270-819703-A	3	1	EA	Nozzle Per DWG-819703A	SA479-316L
809-416502	4	1	EA	Gland-VCR 1/2"	-
287-441557	5	1	EA	Nut-VCR 1/4 F	
809-416508	6	2		Gasket VCR 1/4 Nickel	
812-414612	7	1	EA	PLUG VCR 1/4"	
NamePlate-ASME	8	1		Name Plate	

(Material certs. req'd)

Fab. Notes:

1. Assy to be class "A" O_2 Cleaned & Bagged w/ DE-I wash to Acme std.
2. Finish Req'mt: Better than 10 finish, inside only (Electropolished) for UHP service.
3. Engineering calc's must be provided to show 4x safety factor on design.
4. All welds full penetration
5. Pressure test assy per Acme std: Hydro. to 4500 psig or pneum. to 3750 psig

NOTES		
1. OPERATING PRESSURE PSIG	2500	3000
2. OPERATING TEMPERATURE °F	-350	to +150
3. DESIGN PRESSURE, MAX. PSIG	3000	
4. DESIGN TEMPERATURE, MAX. °F	150	
5. DESIGN TEMPERATURE, MIN.	-350	
6. CONSTRUCTION-SEC VIII, DIV. 1	YES	
19 EDITION ASME CODE		
7. CODE STAMP	NO	
8. CORROSION ALLOWANCE	NONE	
9. X-RAY INSPECTION	NONE	
10. STRESS RELIEVING	NONE	
11. EFFICIENCY-LONGITUDINAL JOINTS	100%	
-OTHER		
12. MAXIMUM ALLOWABLE PRESSURE	3000	
NEW AND COLD		
LIMITED BY		
13. MAXIMUM ALLOWABLE WORKING PRESS.	3000	
USE @ °F (MAXPLATE)	150	
14. HYDROSTATIC TEST PRESSURE PSIG	4500	
15. PNEUMATIC TEST PRESSURE PSIG	3750	
16. PAINT	NONE	
17. PURCHASER'S SPECIFICATIONS		
18. INSPECTIONS		
PURCHASER		
INSURANCE COMPANY	N/A	
19. TEST PROCEDURE	ACME STD	
20. TEST PROCEDURE		
21. ALL NOZZLE AND MANHOLE BOLTS TO STRADDLE NATURAL VESSEL CENTER-LINES UNLESS OTHERWISE NOTED.	YES	
22. ALL CONNECTIONS TO BE BLANKED FOR SHIPMENT.	YES	
23. HYDROCARBON DECONTAMINATION	YES	
24. CHARPY TESTS	N/A	
25. CAPACITY IN GALLONS	N/A	

			7/19/99	
			7/19/99	

Lawrence Livermore Pressure Vessel

ACME CRYOGENICS

SCALE NONE

SHEET 1 OF 1

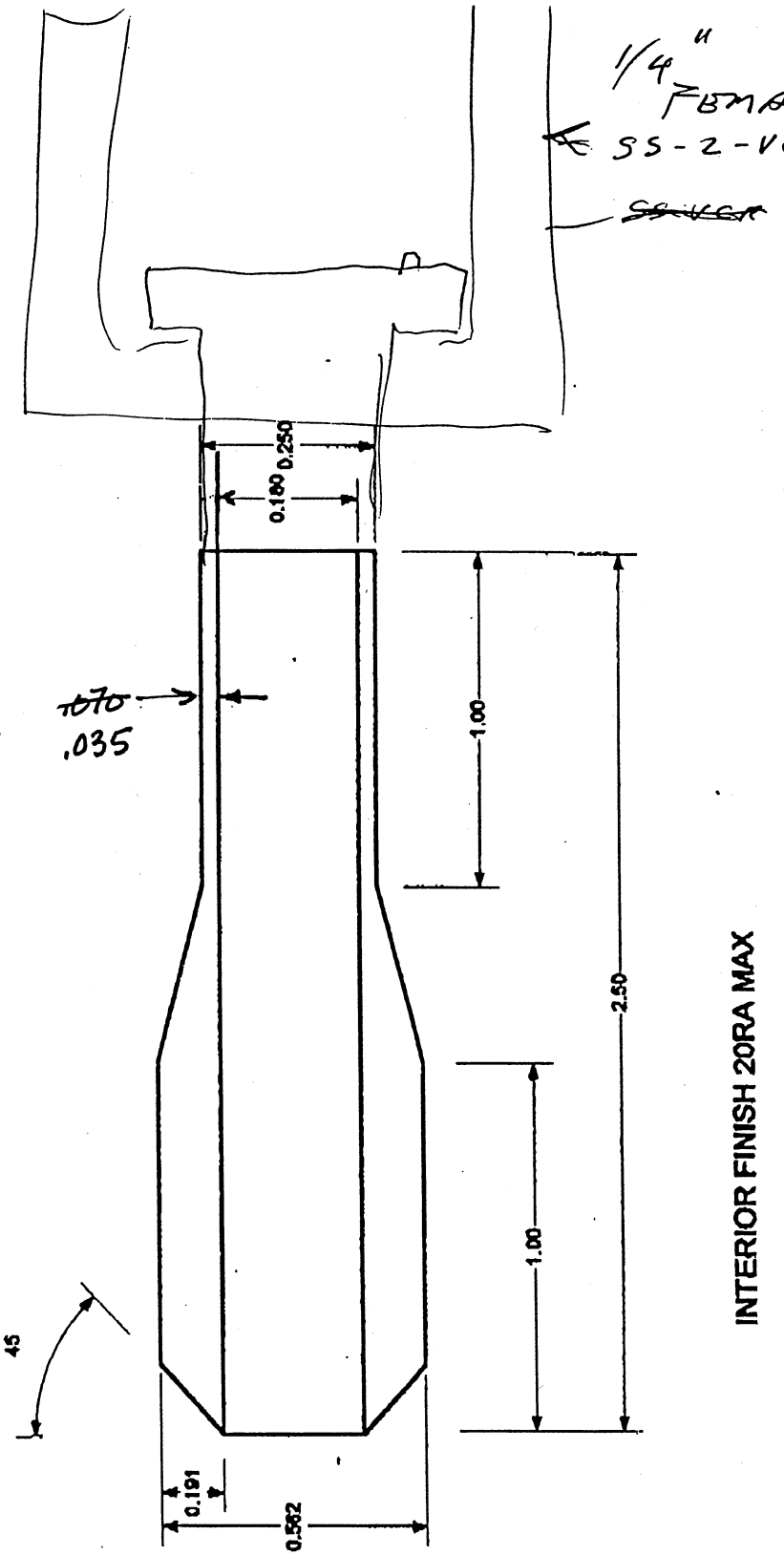

OCO-819705-A

ITEM #3

INTERIOR FINISH 20RA MAX

MATERIAL: 316L STAINLESS STEEL

SCHEDULE NUMBER and/or WEIGHT*	WALL THICKNESS t (inches)	INSIDE DIAMETER d (inches)	FIFTH POWER of ID d^5 (in.^{5})	AREAS and WEIGHTS: SURFACE AREA OUTSIDE A_o (sq ft per ft)	SURFACE AREA INSIDE A_i (sq ft per ft)	Cross-Sectional METAL AREA A (sq in.)	Cross-Sectional FLOW AREA A_f (sq in.)	WEIGHT of PIPE w (lb per ft)	WEIGHT of WATER w_w (lb per ft)	RADIUS of GYRATION r_g (inches)	MOMENT of INERTIA I (in.^{4})	SECTION MODULUS Z (in.^{3})	PRESSURE/STRESS MODULI† for: BOILER CODE POWER DISTR. HEAT'G. & REFR. PIPING c_1	OIL PIPING (based on LAME FORM.) c_2	GAS & AIR PIPING DIV. 1 c_3	GAS & AIR PIPING DIV. 2 c_4
3″ NOMINAL SIZE (cont'd) (OUTSIDE DIAMETER D=3.500)																
	.241	3.018	250	.916	.790	2.467	7.15	8.39	3.10	1.155	3.29	1.883	.0862	.0961	.0948	.0992
	.254	2.992	240	.916	.783	2.590	7.03	8.81	3.04	1.151	3.43	1.962	.0932	.1032	.1013	.1045
	.289	2.922	213	.916	.765	2.915	6.71	9.91	2.90	1.140	3.79	2.165	.1122	.1226	.1188	.1189
80 XS 80S	.300	2.900	205	.916	.759	3.016	6.60	10.25	2.86	1.136	3.90	2.226	.1182	.1287	.1243	.1234
	.312	2.875	196	.916	.753	3.129	6.49	10.64	2.81	1.132	4.01	2.294	.1248	.1355	.1303	.1284
	.406	2.687	140	.916	.703	3.950	5.67	13.43	2.46	1.103	4.81	2.748	.1776	.1894	.1773	.1670
160	.437	2.626	125	.916	.687	4.205	5.42	14.30	2.35	1.094	5.03	2.876	.1956	.2076	.1928	.1798
XX	.600	2.300	64	.916	.602	5.466	4.15	18.58	1.80	1.047	5.99	3.425	.2937	.3065	.2743	.2468
3½″ NOMINAL SIZE (OUTSIDE DIAMETER D=4.000)																
10S	.120	3.760	752	1.047	.984	1.463	11.10	4.97	4.81	1.372	2.76	1.378	.0202	.0279	.0300	.0432
	.128	3.744	736	1.047	.980	1.557	11.01	5.29	4.77	1.370	2.92	1.461	.0237	.0315	.0335	.0461
	.134	3.732	724	1.047	.977	1.628	10.94	5.53	4.74	1.368	3.04	1.522	.0264	.0342	.0361	.0482
	.148	3.704	697	1.047	.970	1.791	10.78	6.09	4.67	1.363	3.33	1.664	.0327	.0405	.0422	.0533
	.188	3.624	625	1.047	.949	2.251	10.31	7.65	4.47	1.349	4.10	2.050	.0508	.0589	.0598	.0677
40 ST 40S	.226	3.548	562	1.047	.929	2.680	9.89	9.11	4.28	1.337	4.79	2.394	.0682	.0766	.0764	.0814
	.281	3.438	480	1.047	.900	3.283	9.28	11.16	4.02	1.319	5.71	2.855	.0938	.1027	.1004	.1012
80 XS 80S	.318	3.364	431	1.047	.881	3.678	8.89	12.51	3.85	1.307	6.28	3.141	.1114	.1206	.1166	.1145
	.344	3.312	399	1.047	.867	3.951	8.62	13.43	3.73	1.298	6.66	3.331	.1238	.1333	.1280	.1238
	.469	3.062	269	1.047	.802	5.203	7.36	17.69	3.19	1.259	8.25	4.127	.1855	.1961	.1827	.1688
XX	.636	2.728	151	1.047	.714	6.721	5.84	22.85	2.53	1.210	9.85	4.925	.2725	.2840	.2558	.2290
4″ NOMINAL SIZE (OUTSIDE DIAMETER D=4.500)																
10S	.120	4.260	1403	1.178	1.115	1.651	14.25	5.61	6.17	1.549	3.96	1.762	.0179	.0247	.0267	.0384
	.128	4.244	1377	1.178	1.111	1.758	14.15	5.98	6.13	1.546	4.21	1.869	.0211	.0279	.0298	.0410
	.134	4.232	1358	1.178	1.108	1.838	14.07	6.25	6.09	1.544	4.38	1.949	.0234	.0303	.0321	.0429
	.142	4.216	1332	1.178	1.104	1.944	13.96	6.61	6.04	1.542	4.62	2.054	.0266	.0335	.0352	.0454
	.165	4.170	1261	1.178	1.092	2.247	13.66	7.64	5.91	1.534	5.29	2.350	.0358	.0428	.0442	.0528
	.188	4.124	1193	1.178	1.080	2.55	13.36	8.66	5.78	1.526	5.93	2.64	.0450	.0522	.0531	.0602
	.205	4.090	1144	1.178	1.071	2.77	13.14	9.40	5.69	1.520	6.39	2.84	.0519	.0592	.0597	.0656
40 ST 40S	.237	4.026	1058	1.178	1.054	3.17	12.73	10.79	5.51	1.510	7.23	3.22	.0649	.0724	.0722	.0758
	.250	4.000	1024	1.178	1.047	3.34	12.57	11.35	5.44	1.505	7.56	3.36	.0702	.0778	.0772	.0800
	.271	3.958	971	1.178	1.036	3.60	12.30	12.24	5.33	1.498	8.08	3.59	.0789	.0866	.0854	.0867
	.281	3.938	947	1.178	1.031	3.74	12.18	12.72	5.27	1.495	8.33	3.70	.0831	.0908	.0893	.0899
	.300	3.900	902	1.178	1.021	3.96	11.95	13.46	5.17	1.489	8.78	3.90	.0910	.0989	.0867	.0960
	.312	3.876	875	1.178	1.015	4.10	11.80	13.96	5.11	1.485	9.05	4.02	.0960	.1040	.1013	.0998
80 XS 80S	.337	3.826	820	1.178	1.002	4.41	11.50	14.99	4.98	1.477	9.61	4.27	.1065	.1147	.1111	.1078
	.375	3.750	742	1.178	.982	4.86	11.04	16.52	4.78	1.464	10.42	4.63	.1227	.1312	.1258	.1200
120	.437	3.626	627	1.178	.949	5.58	10.33	18.96	4.47	1.445	11.65	5.18	.1495	.1585	.1499	.1398
	.500	3.500	525	1.178	.916	6.28	9.62	21.36	4.17	1.425	12.77	5.67	.1773	.1868	.1744	.1600
160	.531	3.438	480	1.178	.900	6.62	9.28	22.51	4.02	1.416	13.27	5.90	.1912	.2009	.1865	.1699
XX	.674	3.152	311	1.178	.825	8.10	7.80	27.54	3.38	1.374	15.29	6.79	.2573	.2676	.2421	.2157
5″ NOMINAL SIZE (OUTSIDE DIAMETER D=5.563)																
10S	.134	5.295	4162	1.456	1.386	2.29	22.02	7.77	9.53	1.920	8.43	3.03	.0189	.0245	.0260	.0347
40 ST 40S	.258	5.047	3275	1.456	1.321	4.30	20.01	14.62	8.66	1.878	15.17	5.45	.0592	.0652	.0650	.0688
	.352	4.859	2708	1.456	1.272	5.76	18.54	19.59	8.03	1.847	19.65	7.07	.0905	.0970	.0946	.0911
80 XS 80S	.375	4.813	2583	1.456	1.260	6.11	18.19	20.78	7.88	1.839	20.68	7.43	.0983	.1050	.1018	.0971
	.437	4.688	2264	1.456	1.227	7.04	17.26	23.95	7.47	1.819	23.31	8.38	.1196	.1266	.1213	.1131
120	.500	4.563	1978	1.456	1.194	7.95	16.35	27.04	7.06	1.799	25.74	9.25	.1415	.1489	.1411	.1294
160	.625	4.313	1492	1.456	1.129	9.70	14.61	32.97	6.33	1.760	30.03	10.80	.1862	.1943	.1804	.1618
XX	.750	4.063	1107	1.456	1.064	11.40	12.97	38.77	5.61	1.722	33.64	12.10	.2323	.2410	.2202	.1941

CAPS
Schedule 160†

Part No. 84

Seamless Steel
TUBE-TURN
Welding Fittings

NOMINAL PIPE SIZE	OUTSIDE DIAMETER O.D.	INSIDE DIAMETER I.D.	WALL THICKNESS T	LENGTH E	TANGENT S	DISH RADIUS R‡	KNUCKLE RADIUS r‡	APPROXIMATE WEIGHT IN POUNDS	LIST PRICE
1	1.315	.815	.250	1½	1.05	.71	.14	.39	$ 8.50
1¼	1.660	1.160	.250	1½	.96	1.00	.20	.54	8.50
1½	1.900	1.338	.281	1½	.88	1.17	.22	.68	8.50
2	2.375	1.689	.343	1¾	.98	1.47	.28	1.19	18.00
2½	2.875	2.125	.375	2	1.09	1.90	.35	1.96	24.20
3	3.500	2.626	.437	2½	1.41	2.29	.44	3.52	24.20
4	4.500	3.438	.531	3	1.61	3.02	.57	6.54	28.00
5	5.563	4.313	.625	3½	1.80	3.77	.72	11.0	39.70
6	6.625	5.189	.718	4	1.98	4.54	.86	17.5	50.00
8	8.625	6.813	.906 (1)	5	2.39	5.96	1.14	32.0	60.00
10	10.750	8.500	1.125 (1)	5½	2.25	7.43	1.42	54.1	105.00
12	12.750	10.126	1.312 (1)	6½	2.66	8.85	1.69	88.7	147.00

kinetics.

fluid systems
1463 centre pointe drive
milpitas, ca 95035

telephone 408.946.3100
facsimile 408.934.6301

Mr. Daniel Archer, Ph.D.
Nuclear Physicist
Lawrence Livermore National Laboratory
7000 East Avenue
Livermore, CA 94551

APPENDIX D

Dear Dan,

Per your request, this letter outlines the manufacturing techniques and industry standards Kinetics Fluid Systems (formerly Insync) used to fabricate the Xenon Delivery System specified and purchased by Lawrence Livermore National Laboratory.

Insync Job #	U0898 (1/8/99)
Insync Item #	870LLL-0001-U0898
Description:	10-E0804 REV. X1, Xenon Delivery System
LLNL PO #	B502632
Ship Date:	3/23/98

Overview:

The design rules, materials of construction, welding methods and assembly techniques used on the Xenon delivery system are consistent with the standards used in low pressure (<250psig) and high pressure (250-3000psig) ultra high purity gas delivery systems for the semiconductor manufacturing industry. These industry standards are extremely rigorous due to the susceptibility to microcontamination and the highly toxic, flammable and corrosive gases used in semiconductor manufacturing.

Below, please find the material specifications and industry standards used for this project. Note that the SEMI (Semiconductor Equipment and Materials International) standards each reference other standards including ASME, ASTM, FED-STD, IES, ISO, SEMI, etc. The texts of the specific documents are available from each of the respective organizations.

Panel design and construction:

The following standards were used as general design rules for the Xenon delivery system.

System Design:
SEMI E49.9 'Guide for ultra-high purity gas distribution systems in semiconductor manufacturing equipment'

Materials:
SEMI F20
Assembly/Test:
SEMI E49.6 'Guide for subsystem assembly and testing procedures-stainless steel systems'

Leak Testing:
SEMI F1 'Specification of for leak integrity of toxic gas piping systems'

Tubing:

All tubing used in this system is manufactured by Valex and conforms to the following standards:

kinetics.

Tubing specifications		
Component	**Materials**	**Application Specifications**
1/4" O.D. Tubing P/N T40-VS-.25-035A5	T316L Stainless Steel	ASTM A 269, ASTM A632 MSWP 4,142 psi, TBP 17,355psi
3/8" O.D. Tubing P/N T40-VS-.375-035A5	T316L Stainless Steel	ASTM A 269, ASTM A632 MSWP 2,776 psi, TBP 11,631psi
1/2" O.D. Tubing T40-VS-.5-049A5	T316L Stainless Steel	ASTM A 269, ASTM A632 MSWP 2,917 psi, TBP 12,222psi

MSWP=maximum safe working pressure TBP=theoretical burst pressure

Fittings, glands and gaskets:

The fittings, glands and gaskets used in this system are manufactured by Swagelok or Parker and conform to the following standards:

Fitting, gland and gasket standards		
Materials	**Component**	**Application Specifications**
316SS	Bodies, Nuts Gaskets, Forged Shapes	ASME SA479, ASTM A276 ASME A240, ASTM A167 ASME SA182, ASTM A314
316L VAR	TB Glands	ASME SA479, ASTM A276
200 Nickel	Gaskets	ASTM B162

Gasket seal integrity specifications			
	Leak rate, std cm^3/s		
	Inboard	**Outboard**	
Gasket	At 10^{-5} torr	At 5000 psig	Extrapolated to vacuum
(Nickle) VS unplated	$<4 \times 10^{-11}$	$<5.5 \times 10^{-10}$	$<4 \times 10^{-15}$

Please call if you have any additional questions or require further clarifications. Thank you again for the opportunity.

Sincerely,

Kinetics Fluid Systems
Ed Poe

INSYNC Systems, Inc.
1463 Centre Pointe Drive
Milpitas, CA 95035
408-946-3100
Fax 408-934-6301

APPENDIX E

SYSTEM LEAK CHECK AND CONFORMANCE CERTIFICATION

Ser. # 003707, 003708, 003709, 003710
System Number: 10-E0804_____Rev.: _B__Qty: __1 set_
INSYNC System Job Number: _U0898_____
Description:_Xenon Delivery System_____
Technician: _Sid Cropper_____Date:_3/22/1999_____

We certify this panel was Helium leak checked and is certified with a Helium Mass Spectrometer with a leak rate sensitivity of less than 1×10^{-9} atm.cc He/sec. with the following:

(X) Alcatel 181 td

And passed with the following exceptions:

Four 2" rupture disc assemblies passed at; 1.0×10^{-8}atm, 2.4×10^{-8}atm, 5.0×10^{-7}atm, 3.0×10^{-5}atm
Four 1/2" rupture disc assemblies passed at 1.0×10^{-8}atm

Signature: _____
Date: 3/25/99

INSYNC PARENT #: 10-E0804
DESCRIPTION: Xenon Delivery System
WELD COUNT: 74

REV: X1
REV DESC: Initial Release
ENG: GPM
DATE: 12/22/98

ITEM #	DESCRIPTION	QTY	MFR	MFR PART #	CUSTOMER/ D REV	Max psi
Weldments						
14	Tube Assy, Supply, Inlet	3	Insync ✓	30-E1873, Rev A		
15	Tube Assy, Reclaim, Divert	1	Insync	30-E1874, Rev B		
16	Tube Assy, Main Outlet	1	Insync	30-E1875, Rev B		
17	Tube Assy, Supply, Divert Manifold	1	Insync	30-E1876, Rev A		
18	Tube Assy, Supply, Purge Manifold	1	Insync	30-E1877, Rev A		
19	Tube Assy, Supply Outlet	1	Insync	30-E1878, Rev B		
20	Tube Assy, Oxisorb Line	2	Insync	30-E1879, Rev A		
21	Tube Assy, Reclaim Outlet	4	Insync	30-E1880, Rev B		
22	Tube Assy, Reclaim Inlet, Rt	1	Insync	30-E1881, Rev A		
23	Tube Assy, Reclaim Diver Outlet	4	Insync	30-E1882, Rev A		
24	Tube Assy, Reclaim Inlet, Left	1	Insync	30-E1883, Rev B		
25	Tube Assy, Reclaim Divert Manifold	2	Insync	30-E1884, Rev A		
26	Tube Assy, Supply, Spool	3	Insync	30-E1887, Rev A		
27	Tube Assy, Chamber Manifold	1	Insync	30-E1888, Rev A		
28	Tube Assy, Main Divert Manifold	1	Insync	30-E1889, Rev A		
29	Tube Assy, Main, Getter Divert	1	Insync	30-E1890, Rev A		
30	Tube Assy, Main, Inlet Manifold	1	Insync	30-E1891, Rev A		
31	Tube Assy, Getter Inlet Line	1	Insync	30-E1895, Rev A		
32	Tube Assy, Getter Line	1	Insync	30-E1896, Rev A		
55	Tube Assy, Adapter, F/F	4	Insync		10-113150-00 X1	
Purchased Components						
Clean Valves						
33	Valve, High-Pressure Bellows, M/M	39	Nupro ✓	SS-HBVCR4-P-C		3500
34	Valve, All-Metal Bellows, 1/2", M/M	7	Nupro ✓	SS-8BG-VCR-3C		1000
Regulators						
35	Regulator, Adjustable, M/M	6	Tescom ✓	64-2663KRA10		3500

Ed Poe
800-672-4363

APPENDIX F

36	Regulator, Adjustable, 4 port F/F	3	Tescom	64-2663KRH19	3500
37	Gauge, Pressure	3	Tescom	4802-3000M	n/a
38	Gauge, Pressure	3	Tescom	4802-0200M	n/a
Pressure Monitoring					
39	Transducer, Pressure, FVCR, Bendix	4	Setra ✓	C2143000C-834-655	10000 burst
40	Display, Pressure, Bendix	4	Setra	3301C4CLC	n/a
62	Transducer, Pressure, FVCR, Bendix	2	Setra ✓	C214250C-834-655	5000 burst
63	Display, Pressure, Bendix	2	Setra	3301C7CLC	n/a
Getter Materials					
41	Oxisorb Getter	1	Oxisorb ✓	S511-HV	150
42	Saes Getter	1	Saes ✓	Monotorr Phase 1	150
Flow Controller					
43	MFC, 20 SLM Ar, D-sub	1	Brooks ✓	5964C4MAP35KA	1500
44	MFC, Controller	1	Brooks	0151AAD2A11A	n/a
Pneumatics and Misc					
45	Tubing, Poly, 1/8 x 1/16	34	Bay Pneum	1C-013-10	n/a
50	Fitting, male 1/8 npt, 1/8t elbow	46	SMC	KJL01-34S	n/a
46	Screw, 8-32 x 3/8, SS, Button Hd	4	Pro-Fastener		n/a
47	Screw, 10-32 x 3/8, SS, Button Hd	76	Pro-Fastener		n/a
52	Schematic, Gas Box	0	Insync	20-E0804	n/a
53	Toggle, Pneum Valve	46	Clippard	MTV-3P	n/a
54	Indicator, Pressure	46	Clippard	IND-3	n/a
VCR Components					
48	Plug, 1/4" VCR	14	Cajon	SS-4-VCR-P	
49	Gasket, 1/4" VCR, Unplated Nickel	183	Cajon	NI-4-VCR-2-GR-VS	
51	Cap, 1/4" VCR	3	Cajon	SS-4-VCR-CP	
60	Cap, 1/2" VCR	5	Cajon	SS-8-VCR-CP	
Rupture Disks					
	Union Holder, 1/2 Tube Stub	7	InSync	6U 1/2 UNION HOLDER	
	Rupture Disk, #306546	3	Zook		157
	Rupture Disk, #306953	4	Zook		2230
	Rupture Disk		BS&B		
	Rupture Disk		BS&B		
	Rupture Disk		BS&B		

n/a = pressure rating not needed

GENERAL INFORMATION

APPENDIX G

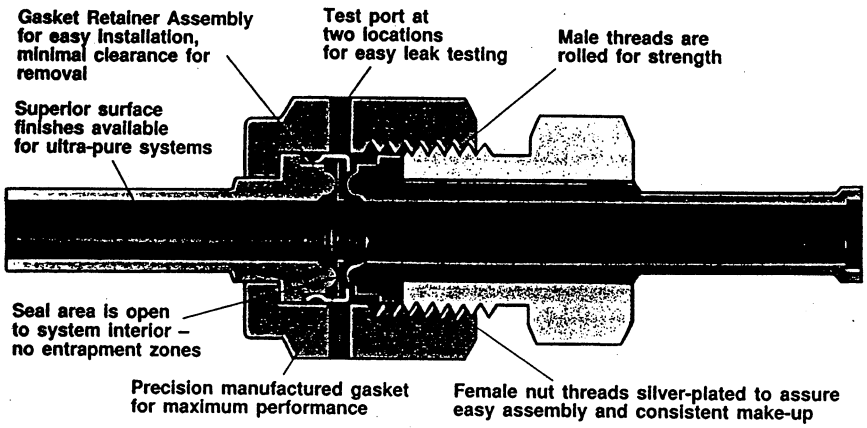

ANTI-TWIST DESIGN
For additional information, see page 10.

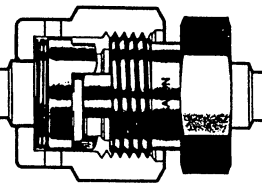

VCR® Components offer the high purity of a metal-to-metal seal, providing leak-free service from critical vacuum to positive pressure.
The seal on a VCR® assembly is made when the gasket is compressed by two highly polished beads during the engagement of a male nut or body hex and a female nut.

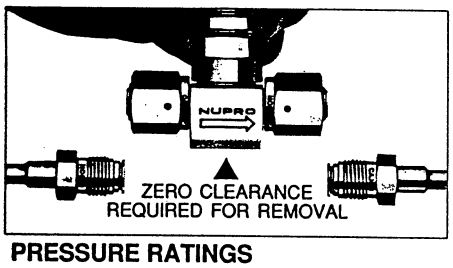

PRESSURE RATINGS
- Calculations based on allowable stress value of 20,000 psi for stainless steel at ambient temperature, per ANSI Code for Pressure Piping B31.3.
- To determine pressure ratings in accordance with ANSI B31.1, multiply psig rating by 0.94.

TEMPERATURE RATINGS

Components	Material	Temperature °F	Temperature °C
Fittings	316 Stainless Steel	1000	538
	316L Stainless Steel	1000	538
	316LV Stainless Steel	1000	538
Gaskets	316 Stainless Steel	1000	538
	Nickel	600	316
	Copper	400	204
	Aluminum①	400	204

①Not suggested for vacuum service.

MATERIALS (designators)
Bodies, Glands and Nuts:
316 stainless steel (SS)
316L stainless steel (316L)
316L VAR – Vacuum Arc Remelt stainless steel (6LV)

HIGH PURITY
A variety of VCR Face Seal Fittings are available with controlled surface finishes, electropolished and specially cleaned to meet Ultra-Pure system requirements. (For more information refer to SWAGELOK Specification SC-01.)

TESTING
The VCR® assembly with a standard gasket design has been helium leak tested to a rate of 4×10^{-9} std cm^3/s and the VS gasket design to a rate of 5×10^{-11} std cm^3/s without leakage.

DIMENSIONS
- Dimensions are in inches, for reference only, subject to change
- E dimension references the smallest nominal inside diameter of the part

CAUTION: Do not mix or interchange parts with those of other manufacturers

TYPICAL VCR® ASSEMBLY

VCR® Assemblies are made up of four or five basic components.

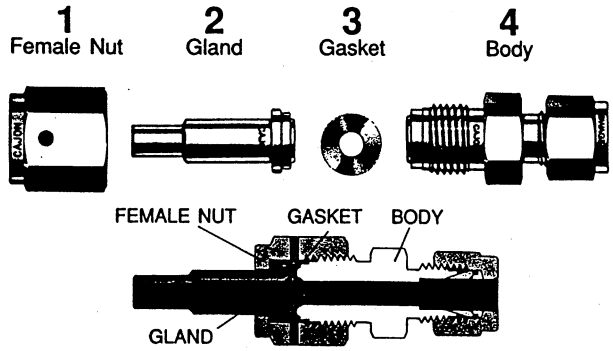

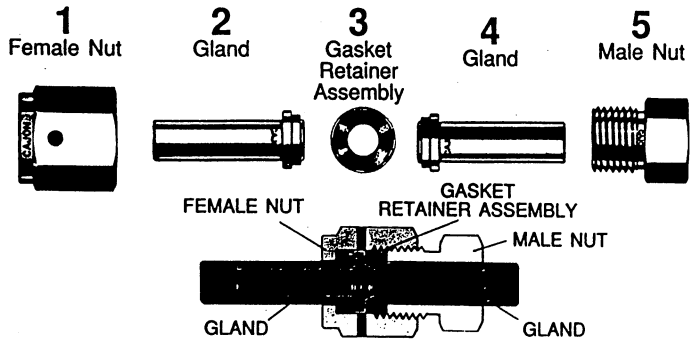

GLANDS

Short Tube Butt Weld

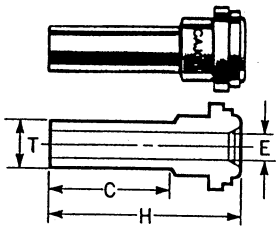

T Tube O.D.	ORDERING NUMBER	C	E	H	Nominal Wall Thickness	Working Pressure psig	Working Pressure bar
1/8	316L-2-VCR-3S-2TB7	.75	.06②	1.08	.028	8500	585
1/4	6LV-4-VCR-3S-4TB2①	.25	.18	.60	.035	5100	351
1/4	316L-4-VCR-3S-4TB3	.38	.18	.72	.035	5100	351
1/4	6LV-4-VCR-3S-4TB7①	.75	.18	1.10	.035	5100	351
1/4	6LV-8-VCR-3S-4TB7	.75	.18	1.12	.035	5100	351
3/8	6LV-8-VCR-3S-6TB2	.25	.31	.62	.035	3300	227
3/8	6LV-8-VCR-3S-6TB7①	.75	.31	1.12	.035	3300	227
1/2	6LV-8-VCR-3S-8TB2	.25	.40	.62	.049	3500	241
1/2	316L-8-VCR-3S-8TB3	.38	.40	.74	.049	3500	241
1/2	6LV-8-VCR-3S-8TB7①	.75	.40	1.12	.049	3500	241

Long Tube Butt Weld

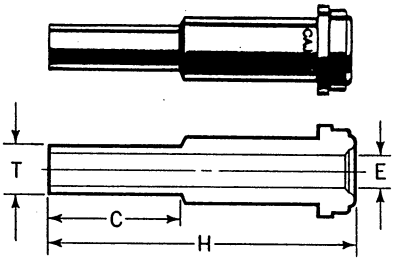

T Tube O.D.	ORDERING NUMBER	C	E	H	Nominal Wall Thickness	Working Pressure psig	Working Pressure bar
1/8	316L-2-VCR-3-2TB7	.75	.06②	1.42	.028	8500	585
1/4	6LV-4-VCR-3-4TB2	.25	.18	1.20	.035	5100	351
1/4	316L-4-VCR-3-02205	.36	.18	1.31	.035	5100	351
1/4	6LV-4-VCR-3-4TB3	.38	.18	1.32	.035	5100	351
1/4	6LV-4-VCR-3-4TB7①	.75	.18	1.70	.035	5100	351
1/4	6LV-8-VCR-3-4TB7	.75	.18	1.80	.035	5100	351
3/8	6LV-8-VCR-3-6TB2	.25	.31	1.29	.035	3300	227
3/8	6LV-8-VCR-3-6TB7	.75	.31	1.79	.035	3300	227
1/2	316L-8-VCR-3-8TB2	.25	.40	1.29	.049	3500	241
1/2	316L-8-VCR-3-8TB3	.38	.40	1.41	.049	3500	241
1/2	6LV-8-VCR-3-8TB7	.75	.40	1.79	.049	3500	241
3/4	316L-12-VCR-3-12TB7	.75	.65	2.03	.049	2400	165
1	316L-16-VCR-3-16TB7	.75	.87	2.32	.065	2400	165

Short Automatic Tube Weld

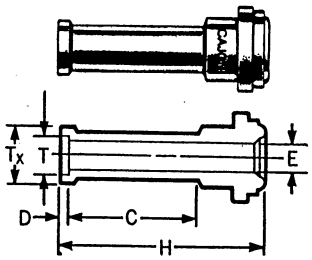

T Tube Size	ORDERING NUMBER	C	D	E	H	Tx	Nominal Wall Thickness	Working Pressure psig	Working Pressure bar
1/4	316L-4-VCR-3AS	.75	.02	.18	1.12	.29	.035	5100	351
1/2	316L-8-VCR-3AS	.75	.04	.40	1.16	.55	.049	3500	241
3/8	316L-8-VCR-3AS6	.75	.03	.31	1.15	.41	.035	3300	227

Long Automatic Tube Weld

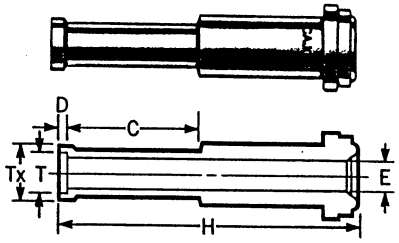

T Tube Size	ORDERING NUMBER	C	D	E	H	Tx	Nominal Wall Thickness	Working Pressure psig	Working Pressure bar
1/4	316L-4-VCR-3A	.75	.02	.18	1.72	.29	.035	5100	351
1/4	316L-8-VCR-3A4	.75	.02	.18	1.82	.29	.035	5100	351
3/8	316L-8-VCR-3A6	.75	.03	.31	1.82	.41	.035	3300	227
1/2	316L-8-VCR-3A	.75	.04	.40	1.83	.55	.049	3500	241
3/4	316L-12-VCR-3A	.75	.04	.65	2.07	.80	.049	2400	165
1	316L-16-VCR-3A	.96	.04	. 87	2.57	1.06	.065	2400	165

Short Socket Weld

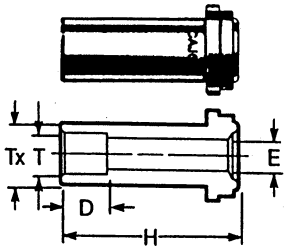

T Tube Socket	ORDERING NUMBER	D	E	H	Tx	Working Pressure psig	Working Pressure bar
1/4	SS-4-VCR-3-.50LG	.28	.18	.50	.35	5200	358
1/4	SS-4-VCR-3-.75LG	.28	.18	.75	.35	5500	378

①Also available in Alloy C-22 (HC22) material.
②VCR Face Seal end of the gland may be back-drilled to a larger I.D.

Features

Compact design

- accommodates tubing systems requiring miniaturization.
- allows close component spacing.
- provides flow and service ratings equal to larger weld fittings designed for the same size tubing.

Rounded body block prevents injury or damage to other components during system fabrication or maintenance.

Material heat code is roll stamped during first manufacturing operation to ensure raw material traceability.

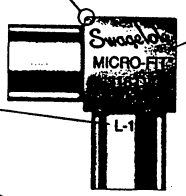

Laser etch marking identifies manufacturer, material, and when applicable, the appropriate process designator according to Swagelok Specification SC-01.

Standard Surface finish is a maximum 11 µin. R_a

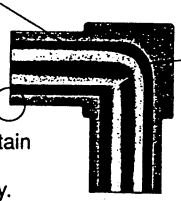

Square, sharp, burr-free tube weld ends enhance alignment, maintain tube wall uniformity, and promote weld repeatability.

Radius junction allows for a smooth flow transition and is designed to eliminate pockets and entrapment zones.

Material

- 316L VAR (vacuum arc remelt) or 316L stainless steel
- some configurations are available in Alloy C-22

Ultra-High-Purity

A variety of Micro-Fit weld fittings are available with controlled surface finishes, electropolished and specially cleaned to meet Ultra-High-Purity system requirements. For more information refer to Swagelok Specification SC-01.

Ordering Information

To order fittings manufactured according to Swagelok Specification SC-01 use the following Designator codes as a suffix to the Ordering Number.
Example: 6LV-4MW-9P

Designator	Surface Finish (R_a)	
	Average	Maximum
P	5 µin (0.13 µm)	10 µin (0.25 µm)
PX	4 µin (0.10 µm)	7 µin (0.18 µm)

Technical Data

Size	Pressure Rating①		Nominal Wall Thickness
	psig	bar	
1/8 in.	8500	580	0.028 in.
1/4 in.	5100	350	0.035 in.
3/8 in.	3300	220	0.035 in.
1/2 in.	3500	240	0.049 in.
6 mm	6600	460	1 mm

① Pressure ratings are calculated in accordance with ANSI B31.3, based on equivalent wall ASTM A269 tubing and an allowable stress value of 20 000 psi.

Dimensions/Ordering Information

Reducing Union

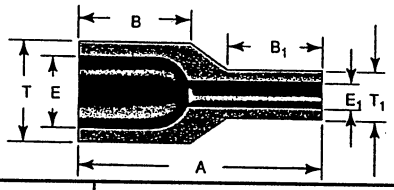

T Tube OD	T1 Tube OD	Ordering Number	Inches (mm)				
			A	B	B1	E	E1
1/4	1/8	6LV-4MW-6-2	0.75 (19.1)	0.41 (10.4)	0.25 (6.4)	0.18 (4.6)	0.06 (1.5)
3/8	1/4	6LV-6MW-6-4	0.75 (19.1)	0.41 (10.4)	0.25 (6.4)	0.31 (7.9)	0.18 (4.6)
1/2	1/4	6LV-8MW-6-4②	0.75 (19.1)	0.41 (10.4)	0.25 (6.4)	0.40 (10.2)	0.18 (4.6)
1/2	3/8	6LV-8MW-6-6②	0.75 (19.1)	0.41 (10.4)	0.25 (6.4)	0.40 (10.2)	0.31 (7.9)

Reducing Elbow

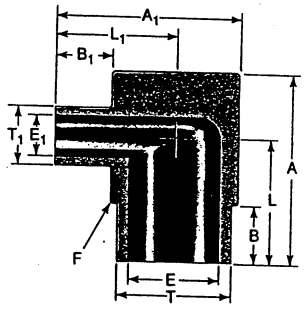

T Tube OD	T1 Tube OD	Ordering Number	Inches (mm)								
			A	A1	B	B1	E	E1	F Body Cube	L	L1
3/8	1/4	6LV-6MW-9-4	0.69 (17.5)	0.69 (17.5)	0.25 (6.4)	0.25 (6.4)	0.31 (7.9)	0.18 (4.6)	7/16	0.47 (11.9)	0.47 (11.9)
1/2	1/4	6LV-8MW-9-4	0.81 (20.6)	0.81 (20.6)	0.25 (6.4)	0.25 (6.4)	0.40 (10.2)	0.18 (4.6)	9/16	0.53 (13.5)	0.53 (13.5)
1/2	3/8	6LV-8MW-9-6	0.81 (20.6)	081 (20.6)	0.25 (6.4)	0.25 (6.4)	0.40 (10.2)	0.31 (7.9)	9/16	0.53 (13.5)	0.53 (13.5)

90° Union Elbow

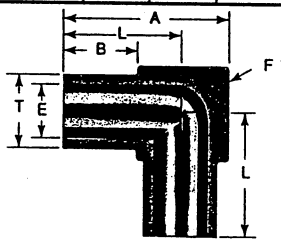

T Tube OD	Ordering Number	Inches (mm)				
		A	B	E	F Body Cube	L
1/8	6LV-2MW-9	0.56 (14.2)	0.25 (6.4)	0.06 (1.5)	5/16	0.41 (10.4)
1/4	6LV-4MW-9②	0.56 (14.2)	0.25 (6.4)	0.18 (4.6)	5/16	0.41 (10.4)
3/8	6LV-6MW-9②	0.69 (17.5)	0.25 (6.4)	0.31 (7.9)	7/16	0.47 (11.9)
1/2	6LV-8MW-9	0.81 (20.6)	0.25 (6.4)	0.40 (10.2)	9/16	0.53 (13.5)
6 mm	6LV-6MMW-9	0.56 (14.2)	0.25 (6.4)	0.16 (4.0)	5/16	0.41 (10.4)

② Also available in alloy C-22 (HC22) material
Dimensions are for reference only, subject to change.

Extended Leg 90° Union Elbow

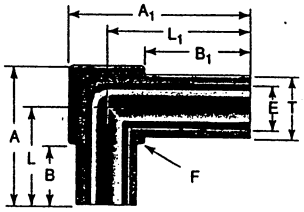

T Tube OD	Ordering Number	Inches (mm)							
		A	A1	B	B1	E	F Body Cube	L	L1
1/4	6LV-4MW-9-03442	0.56 (14.2)	0.76 (19.3)	0.25 (6.4)	0.45 (11.4)	0.18 (4.6)	5/16	0.41 (10.4)	0.61 (15.5)
1/4	6LV-4MW-9-03443	0.56 (14.2)	0.81 (20.6)	0.25 (6.4)	0.50 (12.7)	0.18 (4.6)	5/16	0.41 (10.4)	0.66 (16.8)
1/4	6LV-4MW-9-03444	0.76 (19.3)	0.76 (19.3)	0.45 (11.4)	0.45 (11.4)	0.18 (4.6)	5/16	0.61 (15.5)	0.61 (15.5)
1/4	6LV-4MW-9-03445	0.81 (20.6)	0.81 (20.6)	0.50 (12.7)	0.50 (12.7)	0.18 (4.6)	5/16	0.66 (16.8)	0.66 (16.8)

Catalog
MS-02-37

MICRO-FIT®
Weld Fittings

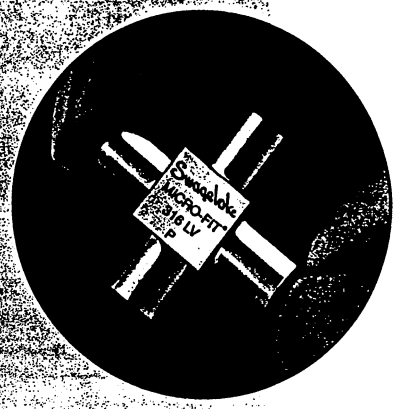

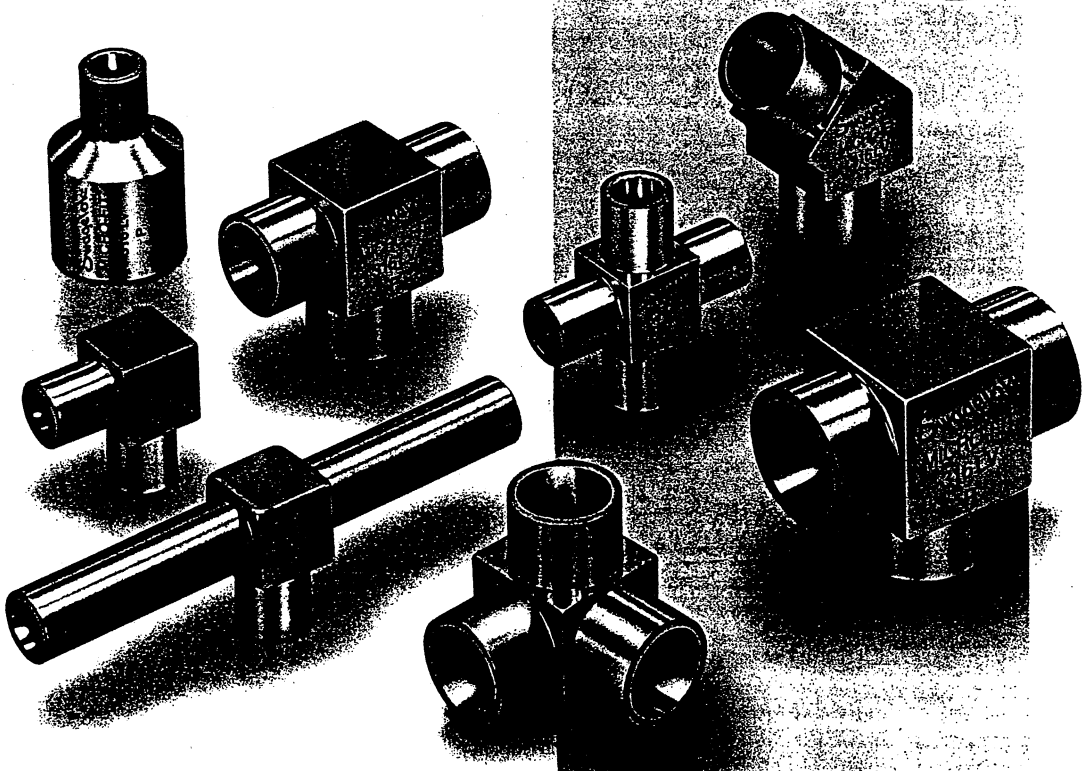

Swagelok
Cajon Company
Macedonia, Ohio 44056 U.S.A.

© 1988, 1991, 1994, 1995, 1997 Swagelok Co., all rights reserved

FEATURES/BENEFITS

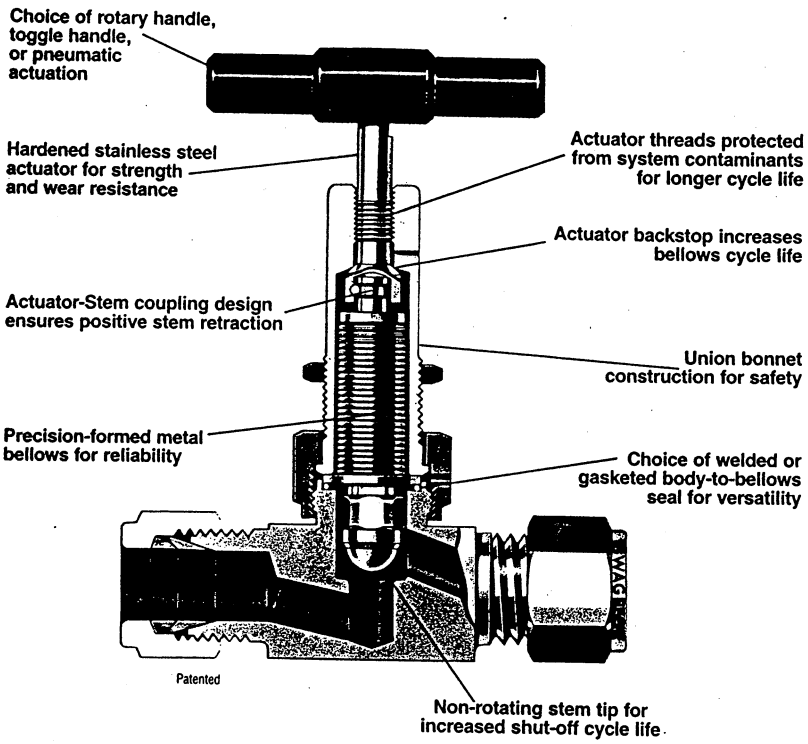

- Pressures to 1000 psig (68 bar)
- Temperatures to 900°F (482°C)
- Choice of materials: brass, 316 stainless steel, and alloy 400
- Flow Coefficients (C_V) from 0.36 to 1.2
- Gageable SWAGELOK® Tube Fitting ends 1/4″ to 1/2″ and 6mm to 12mm
- Tube socket weld ends: 1/4″ to 1/2″
- Tube butt weld ends: 3/8″ to 3/4″
- Tube extensions: 1/4″ to 3/4″ O.D. x 3″ long
- CAJON® Male VCR® Metal Gasket Face Seal Fitting ends: 1/4″ and 1/2″
- Choice of stem insert materials for shut-off and regulating service
- Panel mounting and bottom mounting
- Every valve is factory tested

TECHNICAL DATA

VALVE SIZE/SERIES	STEM TYPE	FLOW COEFFICIENT (C_V)	MAXIMUM PRESSURE RATING (Vacuum to)			MAXIMUM TEMPERATURE RATING		
			BRASS[1]	316SS	ALLOY 400	BRASS	316SS	ALLOY 400
-4BG-	Metal	0.39	1000 psig (68 bar)	1000 psig (68 bar)	700 psig (48 bar)	400°F (204°C)	600°F (315°C)	500°F (260°C)
-4BK-	Kel-F					200°F (93°C)	200°F (93°C)	200°F (93°C)
-4BKT-	Kel-F	0.36	100 psig (6.8 bar)					
-4BW-	Metal	0.39	N/A	1000 psig (68 bar)	700 psig (48 bar)	N/A	900°F (482°C)	500°F (260°C)
-4BRG-	Regulating	0.26	450 psig (31 bar)			400°F (204°C)	600°F (315°C)	
-4BRW-	Regulating		N/A			N/A		
-6BG-	Metal	1.0	1000 psig (68 bar)			400°F (204°C)		
-6BK-	Kel-F					200°F (93°C)	200°F (93°C)	200°F (93°C)
-6BW-	Metal		N/A			N/A	900°F (482°C)	500°F (260°C)
-8BG-	Metal	1.2	1000 psig (68 bar)			400°F (204°C)	600°F (315°C)	
-8BK-	Kel-F					200°F (93°C)	200°F (93°C)	200°F (93°C)
-8BW-	Metal		N/A			N/A	900°F (482°C)	500°F (260°C)

[1] Due to the strength of brass threads, the cycle life of brass valves will be limited when operated frequently at pressures above 450 psig (31 bar).

Internal Volume

SERIES	INTERNAL VOLUME (approx.)[2]
4B	0.10 in.³ (1.6 cm³)
4BKT	0.11 in.³ (1.8 cm³)
4BR	0.16 in.³ (2.6 cm³)
6B	0.24 in.³ (3.9 cm³)
8BKT	0.26 in.³ (4.3 cm³)

Temperature Gradient

316 Stainless Steel Valves

WHEN VALVE SEAT IS	VALVE HANDLE IS
600°F (315°C)	195°F (91°C)
900°F (482°C)	275°F (135°C)

[2] Determined using SWAGELOK ended valves.

HB Series Air Actuated High Pressure Bellows Valve

VALVE FEATURES

- Choice of Normally Closed and Normally Open Modes
- Low actuation pressure of 75 psig (5 bar)
- Full pressure rating in either flow direction
- Positive stem retraction
- Easily purged
- Specially cleaned to SWAGELOK Specification SC-11
- Optional high-purity processing to SWAGELOK Specification SC-01 available
- 100% helium leak-tested
- Optional bonnet Sniffer Tube available

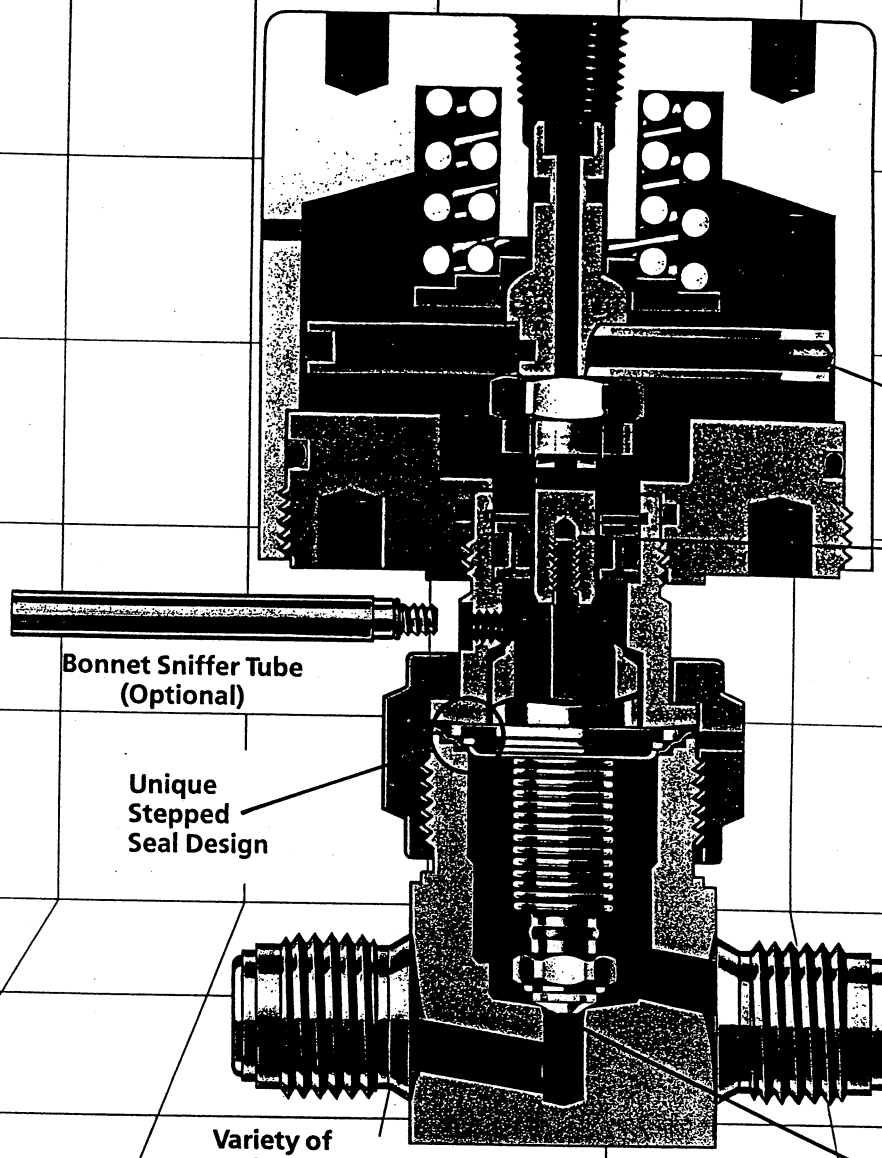

Technical Data

Orifice Size		Flow③ Coefficient C_V	Internal③ Volume (approx.)	Pressure Ratings at 70°F (20°C)④		Back Pressure Rating	Temperature Ratings①	
in.	mm			for Valve	for Air Actuator		for Valve	for Air Actuator
0.15	3.8	0.30	0.27 in.³ (4.4 cm³)	3500 psig (240 bar) Maximum	30 to 110 psig② (2 to 8 bar) See Air Actuator Pressure at System Pressure graph.	3500 psig (240 bar)	with Kel-F Stem Insert: –40°F to 150°F (–40°C to 65°C) with Vespel Stem Insert: –40°F to 400°F (–40°C to 200°C)	–10°F to 400°F (–20°C to 200°C)

Table of Dimensions/Ordering Information

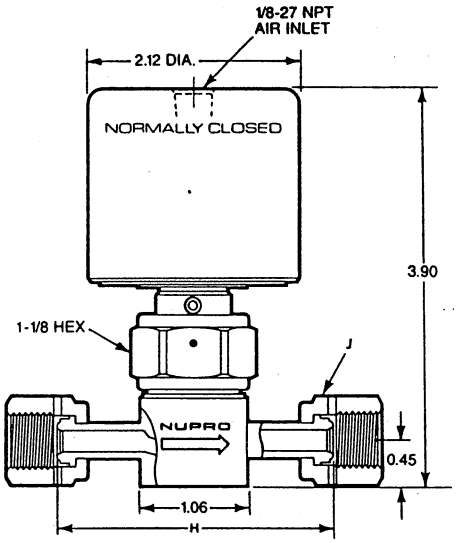

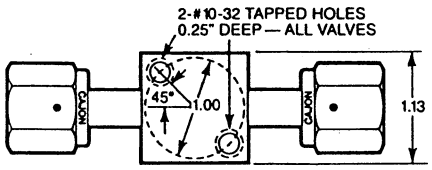

Bottom view

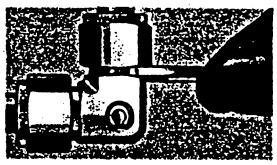

Gageability, an exclusive feature of SWAGELOK Tube Fittings, allows easy inspection for sufficient pull-up before a system is pressurized.

Connection Size	Basic Ordering Number⑦	H	J Hex
1/4 Female VCR to 1/4 Female VCR	SS-HBV51-	2.76	3/4
1/4 SWAGELOK to 1/4 SWAGELOK	SS-HBS4-C 285.40	2.46	9/16
3/8 SWAGELOK to 3/8 SWAGELOK	SS-HBS6-	2.58	11/16
6mm SWAGELOK to 6mm SWAGELOK	SS-HBS6MM-	2.46	14mm
1/4 Male VCR to 1/4 Male VCR	SS-HBVCR4-	2.30	—
1/4 Butt Weld to 1/4 Butt Weld	6LV-HBBW4-	1.74	—
1/4 TSW or 3/8 TBW to 1/4 TSW or 3/8 TBW	SS-HBTW4-	1.75	—
3/8 TSW or 1/2 TBW to 3/8 TSW or 1/2 TBW	SS-HBTW6-	1.81	—

Typical Ordering Number Description

SS-HBVCR4-C

VCR—TM SWAGELOK Co. / Kel-F—TM 3M Company / Viton, Vespel —TM Dupont / 17-4PH, 17-7PH —TM Armco Steel

Printed in U.S.A.
SP
April, 1997

ZOOK®
ENTERPRISES, LLC
RUPTURE DISKS

16809 PARK CIRCLE DRIVE P.O. BOX 419
CHAGRIN FALLS, OHIO 44022
TOLL FREE: 800.543.1043
TEL: 440.543.1010
FAX: 440.543.4930
E-MAIL: zook@zookdisk.com
WEB URL: http://www.zookdisk.com

FAX TRANSMISSION SHEET

DATE: JUNE 25, 1999

TO: BOB PATTERESON

COMPANY: LAWERNCE-LIVERMORE NATIONAL LAB.

FROM: ALAN KOHTA

SUBJECT: 1/2" - 2250 PSIG & 2" 150 PSIG RUPTURE DISKS

THE RUPTURE DISKS YOU RECEIVED ARE TESTED UNDER THE SAME GUIDE LINES AS ASME RUPTURE DISKS.

DISK		
SIZE:	1/2"	2"
TYPE:	Z	Z
S/N:	44786.010	44786.030
MATERIAL:	STAINLESS STEEL	STAINLESS STEEL
RATING	2250 PSIG	150 PSIG
TEMPERATURE:	72 DEG. F	72 DEG. F
MFG RANGE:	-3/+6%	-4/+7%
BURST TOL:	+/-5%	+/-5%

HOLDER		
SIZE:	1/2"	2"
TYPE:	UNION 6U	UNION 6U
S/N:	44786.020	44786.040
MATERIAL:	STAINLESS STEEL	STAINLESS STEEL

Bulletin no. 20100

ZOOK® Series Z *Forward Acting* Metal Rupture Disks

Features:

- Forward acting tension type design without score lines
- Operates to 70% of the disk's rated burst pressure
- Sizes available from 1/4" thru 36" diameters
- Burst pressures range from 3 to 80,000 psig
- Temperature ratings up to 1000°F (538°C)
- Excels in liquid or gas applications

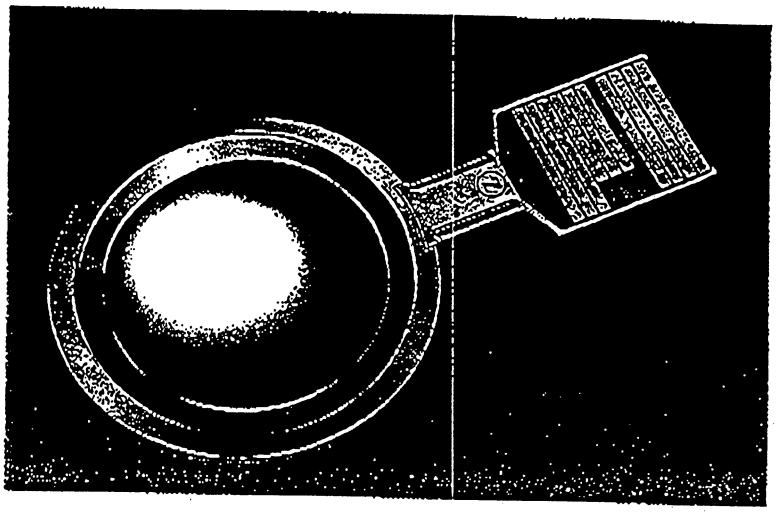

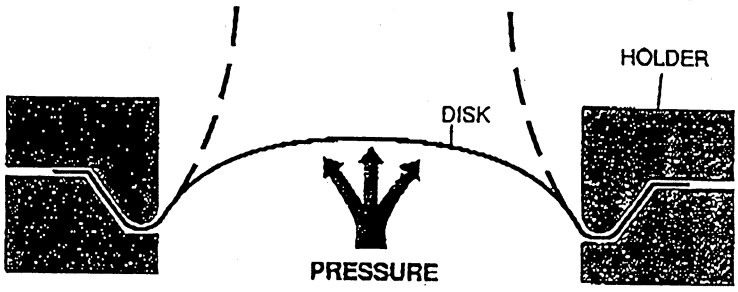

Series Z Disks mount with the concave surface toward the process media. As pressure increases above the recommended operating pressure, the disk will bulge until it reaches the maximum tensile strength of the material. When the Series Z Disk bursts, it folds back against the holder. This results in a full-opening for optimal flow conditions.

Options

Seating Configurations ZOOK's Series Z Rupture Disks come in two basic seating designs:

1. 30° angular *light-lip design* for normal operating pressures
2. 30° *heavy-lip design* for higher pressures.

Vacuum Supports Due to thinness of some disk materials, a vacuum support may be required. Vacuum supports are attached to a disk and allow the disk to support a full system vacuum. Consult ZOOK if back pressures are expected.

Liners/Coatings Provide additional protection from the effect corrosives might have on disk performance. Liners are made of TEFLON®. Teflon coatings also are used to protect the disk from atmospheric or corrosive media. Refer to *Table 2* for maximum temperature ratings for various disk, liner and coating materials.

Protective Rings Can be used with Series Z Disks made of thin materials or when delicate liners are used. These rings protect the rupture disk from foreign material in the sealing area where holders may be pitted or corroded from extended use.

Gaskets Can be used to provide additional sealing and prevent leakage through the seating area of a scratched or pitted holder. They are located on the process side of the disk and are usually made from Teflon. Other materials are available upon request.

Forward Acting Rupture Disk Cross-Reference

	ZOOK	OSECO	BS & B	CDC	FIKE
Forward Acting	Z	STD	B	STD	P
W/Vacuum Support	ZV	STDV	BV	STD-V	PV
W/Top Ring	RZ	RSTD	BR	R-STD	CP
W/Top & Bottom Ring	RZR	RSTDR	BRR	R-STD-R	CPC
W/Ring & Vacuum Support	RZV	RDTDV	BRV	R-STD-V	CPV

ZOOK® ENTERPRISES
16809 Park Circle Drive
Box 419
Chagrin Falls, OH 44022
Phone: (216) 543-1010
1-800-543-1043
FAX: (216) 543-4930

Table 1 – Minimum and Maximum Burst Pressures for Series Z Rupture Disks

Size	Minimum Burst Pressure (without liners)/Maximum Burst Pressure (with Teflon liners) psig @ 72°F												For Disks with Teflon Liners (Add to Disk Minimum Burst Pressure)		
	Aluminum		Silver		Nickel		Monel		Inconel		316SS		Inlet Only	Outlet Only	Both Sides
	min.	max.	min.	max.	min.	max.	min.	max.	min.	max.	min.	max.			
1/4"	160	[illegible]	450	[illegible]	600	[illegible]	700	[illegible]	1120	[illegible]	1550	[illegible]	▲	▲	▲
1/2"	65	15000	220	21500	300	60000	350	60000	560	80000	760	80000	150	150	300
1"	29	13000	120	13000	150	33000	180	33000	250	50000	420	50000	50	50	100
1-1/2"	22	[illegible]	80	37000	100	22000	116	22000	160	33000	275	33000	35	35	70
2"	13	[illegible]	48	[illegible]	60	15000	70	15000	110	[illegible]	150	[illegible]	25	25	50
3"	10	[illegible]	35	[illegible]	45	9000	50	9000	80	15000	117	[illegible]	15	15	30
4"	7	5325	26	11325	35	6500	40	6500	70	12000	90	11100	11	11	22
6"	5	[illegible]	20	[illegible]	25	5000	30	5000	47	[illegible]	62	[illegible]	8	8	16
8"	4	[illegible]	15	10200	20	[illegible]	23	[illegible]	34	[illegible]	51	[illegible]	6	6	12
10"	4	1135	▲		16	3000	17	3000	30	5500	43	5500	5	5	10
12"	3	1110	▲		13	2500	15	[illegible]	25	[illegible]	36	[illegible]	4	4	8
14"	3	[illegible]	▲		11	[illegible]	13	[illegible]	21	[illegible]	31	[illegible]	4	4	8
16"	3	▲	▲		10	▲	12	▲	19	[illegible]	28	[illegible]	3	3	6
18"	3	[illegible]	▲		9	[illegible]	11	[illegible]	17	[illegible]	24	[illegible]	3	3	6
20"	3	[illegible]	▲		8	[illegible]	9	[illegible]	16	[illegible]	22	[illegible]	3	3	6
24"	3	[illegible]	▲		▲		▲		▲		▲		2	2	4
30"	▲		▲		▲		▲		▲		▲		▲	▲	▲
36"	▲		▲		▲		▲		▲		▲		▲	▲	▲

Protective Rings should be used when Burst Pressure is below the pressures shown (psig @ 72°F)						
1/4"	▲	▲	▲	▲	▲	▲
1/2"	520	1300	2290	3000	3600	3700
1"	260	650	1145	1500	1800	1830
1-1/2"	180	450	790	1030	1240	1255
2"	110	280	485	635	760	775
3"	75	200	340	445	535	545
4"	60	150	270	350	420	430
6"	45	115	200	260	315	320
8"	35	85	155	200	240	245
10"	28	▲	125	160	195	200
12"	24	▲	105	135	160	165
14"	20	▲	90	115	140	140
16"	18	▲	80	100	120	125
18"	16	▲	70	90	110	110
20"	14	▲	62	80	100	100
24"	12	▲	52	68	80	85
30"	▲	▲	▲	▲	▲	▲
36"	▲	▲	▲	▲	▲	▲

(▲) = Consult ZOOK

Table 1 – notes

- Maximum burst pressures depend on disk size and application temperature. Pressures to 80,000 psig are available.
- Other material and sizes are available upon request.
- Other liner materials are available upon request. Minimum burst pressures will change with change in liner material.
- For larger sizes or sizes not shown, contact ZOOK.

Table 2

Maximum Temperature Ratings for Disk Materials	
Aluminum	260°F
Silver	260°F
Nickel	800°F
Monel	800°F
Inconel	1000°F
316 Stainless Steel	900°F
Maximum Temperature Ratings for Liners and Coatings	
Teflon ..... FEP	400°F
..... TFE or PFA	500°F

Table 3

Manufacturing Range/Burst Tolerance @ 72°F			
Specified Burst Pressure Rating psig	Manufacturing Range % Under	Manufacturing Range % Over	Burst Tolerance
2-5	–40	+40	±2 psig
6-8	–40	+40	
9-12	–30	+30	
13-14	–10	+20	
15-19	–10	+20	
20-39	– 4	+14	
40-50	– 4	+14	±5%
51-100	– 4	+10	
101-500	– 4	+ 7	
501-up	– 3	+ 6	

Table 3 – notes

- Special reduced manufacturing design ranges for the Series Z forward acting metal disk. 25%, 50% and 75% ranges are available upon request. Please consult ZOOK for additional information.
- Burst tolerances are the maximum expected variation from the disk's rated (stamped) burst pressure.
- ZOOK Series Z rupture disks can be manufactured to comply with ASME code requirements.

TEFLON - TM DuPont
MONEL - TM Huntington Alloys
INCONEL - TM International Nickel
Printed in U.S.A.
3-96-2500GP

Union Holder for Standard or Composite Type Rupture Discs

2-3308-2

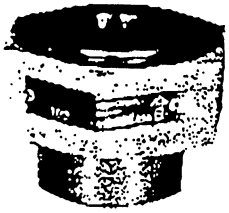

Assembly #1U
Free Outlet
Threaded Inlet

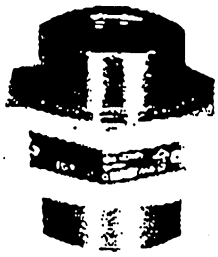

Assembly #2U
Threaded Outlet
Threaded Inlet

Assembly #3U
Welded Outlet
Threaded Inlet

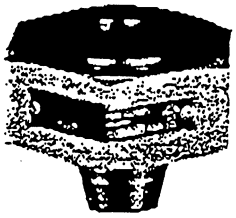

Assembly #4U
Free Outlet
Welded Inlet

Assembly #5U
Threaded Outlet
Welded Inlet

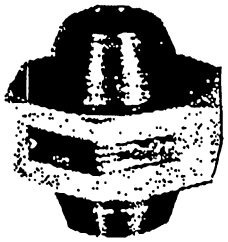

Assembly #6U
Welded Outlet
Welded Inlet

Union type SAFETY CROWNS are provided in ½", 1", 1½" and 2" pipe sizes. Standard bore for welded connections in Assemblies 3U, 4U, 5U and 6U are as follows:

½", 1" and 1½" (either 3000 or 6000 psig. rating) - Schedule 80
2" (1200 psig. Maximum rating) - Schedule 40

These units are normally furnished constructed of carbon steel. However, all parts can be supplied from 300 series stainless steel or other machinable metal. Free outlets are sometimes supplied with threaded or welded connections at no additional charge.

All units are designed with 30 degree angular seating. When ordering standard or composite discs, please state that the disc is for a (UT) union type holder. By doing so, ZOOK will NOT attach the tags to the disc, and we will trim the disc OD to assure a perfect fit in the holder. The tags will ship with discs as a separate item. Holes have been punched in the corner of the tag, so they can be wired to the union during installation for positive disc identification.

Union assemblies #2U and #5U can be supplied with a muffled outlet. This prevents any fragments or product from dispersing direct from nozzle. Also, there is a reduction in the noise (db) level at burst of the disc.

Dimensions and maximum pressure ratings are listed on Page 2.

DIMENSIONS

PIPE SIZE	MAX RATING PSIG	HEX SIZE	OVERALL HEIGHT (Inches)					
			1U	2U	3U	4U	5U	6U
1/2" 1/2"	3000 6000	1-3/4" 2"	1-5/8" 1-7/8"	2-3/8" 2-5/8"	2-1/4" 2-3/4"	1-3/4" 2-3/16"	2-3/8" 2-11/16"	2-1/4" 2-3/16"
1" 1"	3000 6000	2-1/2" 3"	2-1/8" 2-7/16"	3-1/4" 3-3/8"	3-1/4" 3-1/4"	2-1/4" 2-5/8"	3-1/4" 3-1/2"	3-1/4" 3-3/8"
1-1/2"	3000	3-1/2"	2-7/16"	2-7/16"	3-6/16"	2-7/16"	3-7/16"	3-1/2"
2"	1200	4-1/2"	2-5/8"	4"	4"	2-5/8"	4"	4"

PRESSURE/TEMPERATURE RATINGS FOR UNION TYPE SAFETY CROWN FITTINGS

SERVICE TEMP. °F	MAXIMUM RATING					
	1200 psi ASSEMBLY MATERIAL		3000 psi ASSEMBLY MATERIAL		6000 psi ASSEMBLY MATERIAL	
	C. Std	300 Ser. Stainless	C. Std	300 Ser. Stainless	C. Std	300 Ser. Stainless
100	1200	1200	3000	3000	6000	6000
200	1165	1165	2915	2915	5830	5830
300	1135	1135	2845	2845	5690	5690
400	1110	1110	2775	2775	5550	5550
500	1040	1040	2605	2605	5210	5210
600	925	925	2310	2310	4620	4620
700	785	825	1960	2055	3920	4110
800	610	750	1525	1865	3050	3730
900	370	670	925	1675	1855	3350
1000	140	595	355	1485	715	2975

To change inches to millimeters multiply inches by 25.40.
To change inches to centimeters multiply inches by 2.540.
To change PSIG to Kg-cms squared multiply PSIG by 0.3417.

ASME Sect 8 Div 1
UG-127 or so

ZIG-6001

ZOOK®
ENTERPRISES, LLC
RUPTURE DISKS
16809 PARK CIRCLE DRIVE • CHAGRIN FALLS, OHIO 44022 •
(440) 543-1010 • FAX (440) 543-4930

306546
306593

@ least 2 for
740 psig ± 5%
given lot

SERIES 'Z' INSTALLATION GUIDE
IN ZA TYPE 30° SEAT, FULL BOLTED & UNION TYPE HOLDER

WARNING

< 4% psig ± 2 psig.

USER SHOULD READ AND THOROUGHLY UNDERSTAND THESE INSTRUCTIONS BEFORE INSTALLING RUPTURE DISK. THESE INSTRUCTIONS DO NOT PURPORT TO ADDRESS ALL OF THE SAFETY FACTORS ASSOCIATED WITH THE RUPTURE DISK'S USE IN SERVICE. IT IS THE RESPONSIBILITY OF THE USER TO ESTABLISH APPROPRIATE SAFETY, HEALTH, AND TRAINING MEASURES FOR THEIR PERSONNEL INSTALLING, SERVICING, OR WORKING IN AN AREA WHERE RUPTURE DISK ASSEMBLIES ARE IN USE.

IT IS THE USER'S RESPONSIBILITY FOR DESIGN OF ADEQUATE VENTING AND INSTALLATION OF ADEQUATE VENT PIPING OR DIRECTIONAL FLOW AFTER RUPTURE OCCURS WITH THE RUPTURE DISK AS INTENDED. WHEN SIZE IS SPECIFIED, ZOOK ENTERPRISES ASSUMES THAT ADEQUATE PROVISIONS HAVE BEEN MADE BY PURCHASER FOR PROPER VENTING OF A SYSTEM TO RELIEVE THE SPECIFIC PRESSURE. LOCATE RUPTURE DISK WHERE PEOPLE OR PROPERTY WILL NOT BE EXPOSED TO THE SYSTEM DISCHARGE IN CASE OF RUPTURE. VENT TOXIC OR FLAMMABLE FUMES OR LIQUIDS TO A SAFE LOCATION TO PREVENT PERSONAL INJURY OR PROPERTY DAMAGE.

IT IS THE USER'S RESPONSIBILITY TO SPECIFY THE BURST PRESSURE RATING OF A RUPTURE DISK AT A COINCIDENT TEMPERATURE AT WHICH THE RUPTURE DISK IS TO BE USED. A RUPTURE DISK IS A TEMPERATURE SENSITIVE DEVICE. THE BURST PRESSURE OF THE RUPTURE DISK IS DIRECTLY AFFECTED BY ITS EXPOSURE TO THE COINCIDENT TEMPERATURE. GENERALLY, AS THE TEMPERATURE AT THE RUPTURE DISK INCREASES, THE BURST PRESSURE DECREASES; INVERSELY, AS THE TEMPERATURE AT THE RUPTURE DISK DECREASES, THE BURST PRESSURE MAY INCREASE. FAILURE TO PROPERLY UTILIZE A RUPTURE DISK AT THE SPECIFIED COINCIDENT TEMPERATURE COULD CAUSE PREMATURE FAILURE OR OVERPRESSURIZATION OF A SYSTEM.

THE INSTANTANEOUS RELEASE OF PRESSURE FROM THE RUPTURE DISK CAN CREATE VIOLENT NOISES DUE TO THE DISCHARGE AT SONIC VELOCITY. IT IS THE USER'S RESPONSIBILITY TO PROTECT AGAINST HEARING DAMAGE TO ANY BYSTANDERS.

PARTICLES MAY BE DISCHARGED WHEN THE RUPTURE DISK RUPTURES. THESE PARTICLES MAY BE PART OF THE RUPTURE DISK ITSELF, OR OTHER ENVIRONMENTAL MATTER IN THE SYSTEM. IT IS THE USER'S RESPONSIBILITY TO ASSURE THAT THESE PARTICLES ARE DIRECTED TO A SAFE AREA TO PREVENT PERSONAL INJURY OR PROPERTY DAMAGE.

THERE IS NO GUARANTEE OF RUPTURE DISK LIFE. SUCH LIFE SPAN IS AFFECTED BY CORROSION, CREEP AND FATIGUE, AND PHYSICAL DAMAGE. THESE CONDITIONS WILL DERATE THE RUPTURE DISK TO A LOWER SET PRESSURE. THE CUSTOMER AND/OR USER SHOULD BE PREPARED TO HANDLE A PREMATURE FAILURE OF THE RUPTURE DISK. THE MEDIA OR OTHER ENVIRONMENTAL CONDITIONS SHOULD NOT ALLOW ANY BUILD-UP OR SOLIDIFICATION OF MEDIA TO OCCUR ON A RUPTURE DISK. THIS MAY INCREASE THE PRESSURE SETTING OF THE RUPTURE DISK.

CUSTOMER AND/OR ITS INSTALLER SHALL BE RESPONSIBLE FOR THE PROPER INSTALLATION OF SELLER'S HOLDERS AND RUPTURE DISKS INTO A SYSTEM. CUSTOMER AND/OR ITS INSTALLER SHALL BE RESPONSIBLE FOR IMPROPER INSTALLATION AND PHYSICAL DAMAGE RESULTING THEREFROM, INCLUDING, BUT NOT LIMITED TO, DAMAGE RESULTING FROM LEAKAGE, IMPROPER TORQUING, AND FAILURE TO FOLLOW INSTALLATION INSTRUCTIONS.

I. Safety Precautions Before Installation

1. The SERIES "Z" Type Rupture Disk is a precision instrument and must be handled with extreme care. Rupture disks should be installed only by qualified personnel familiar with rupture disks and proper piping practices.
2. Do not install rupture disk if there is any damage in the dome area. A damaged rupture disk is any rupture disk with visible nicks or dents in the dome.
3. Zook Enterprises does not recommend reinstalling a rupture disk that has been removed from the holder as reinstallation may adversely affect the joint sealing capabilities and/or performance of the rupture disk.

BS&B

612-44P6550

241-3204

ALL DIMENSIONS REFERENCE
METRIC EQUIVALENTS IN PARENTHESES

GAUGE PORT OPTIONS

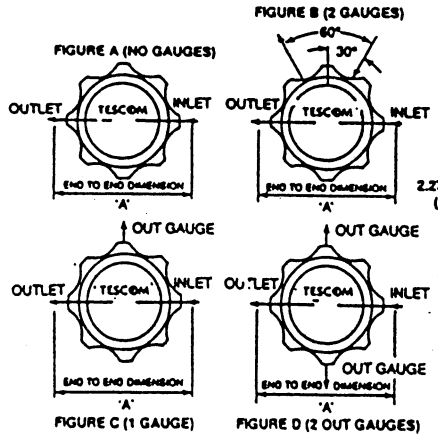

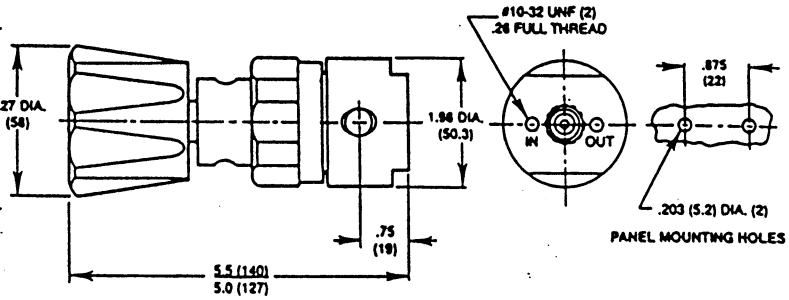

64-2663KRA10
64-2663KRH19

SPECIFICATIONS

FLUID MEDIA — All gases corrosive or non-corrosive or those requiring high purity regulation compatible with materials of construction.

Maximum rated inlet pressure	3500 PSIG (238 bar) 600 PSIG (41 bar)
Outlet pressure ranges	1-30, 1-60, 1-100 and 1-250 PSIG (.1-2, .1-4, .1-7 and .1-17 bar)
Design proof pressure	150% of maximum rated pressure
Design burst pressure	400% of maximum operating pressure
Materials:	
Body	316L Stainless Steel
Seat	Kel-F 81® or Teflon® (Vespel® – optional for 3500 PSIG model only)
Diaphragm	316L Stainless Steel
Valve stem	316 Stainless Steel
Spring	316 Stainless Steel
Valve guide	316L Stainless Steel
Flow capacity	C_v= .06 (3500 PSIG model) C_v= .15 (600 PSIG model)
Porting	Four High Purity Internal Connections (Style 'A')
Operating temperature	Kel-F 81®: -40°F to +140°F (-40°C to +60°C) Teflon®: -40°F to +160°F (-40°C to +71°C) Vespel®: -40°F to +165°F (-40°C to +74°C)
Weight (w/o gauges)	2.0 lbs. (.9 kg.)

CLEANING: Tescom ES 500 DI water cleaning is performed on all 64-2600 models.

ADJUSTABLE STOP: This regulator incorporates an adjustable stop which allows the maximum outlet pressure to be limited to any value between the maximum rated value and 50% of the maximum rated value.

LEAK RATE CERTIFICATION .....To 1 x 10^{-9} atm cc/sec He available at extra cost. Consult factory.

ACCESSORIES (additional cost)

REPAIR KITS:

Model	Standard Repair Kit	Soft Goods Kit
64-266XKXX1X	P/N 389-3575	P/N 389-3572
64-266XKXX2X	P/N 389-3576	P/N 389-3573
64-266XTXX1X	P/N 389-3577	P/N 389-3574
64-266XTXX2X	P/N 389-3607	P/N 389-3606
64-266XVXX1X	P/N 389-3739	P/N 389-3738
64-266XVXX2X	P/N 389-3741	P/N 389-3740

Gauges: Consult GAUGES, section of catalog.

ORDERING INFORMATION

EXAMPLE: 64-2662KA410

BASIC SERIES

BODY MATERIAL
6 – 316L Stainless Steel

OUTLET PRESSURE RANGES
0 – 0-30 PSIG (0-2.1 bar)
1 – 0-60 PSIG (0-3.4 bar)
2 – 0-100 PSIG (0-7 bar)
3 – 0-250 PSIG (0-17 bar)

SEAT MATERIAL
K – Kel-F81®
T – Teflon®
V – Vespel® (3500 PSIG models only

INLET & OUTLET PORT TYPE
A – H.P.I.C.* Style 'A' (see below)
R – Welded ** (see below)

GAUGE PORT OPTION	NO. OF GAUGE PORTS
0 – None	0 (fig. A)
1 – 1/4" HPIC-A	1 (fig. C)
2 – 1/4" HPIC-A	2 (fig. B)
3 – 1/4" HPIC-A	2 (fig. D)
4 – 1/4" Male Swivel	2 (fig. D)
5 – 1/4" Male Swivel	1 (fig. C)
6 – 1/4" Male Swivel	2 (fig. B)
7 – 1/4" Female Swivel	2 (fig. D)
8 – 1/4" Female Swivel	1 (fig. C)
9 – 1/4" Female Swivel	2 (fig. B)
S – 1/4" Fixed Male	2 (fig. B)
T – 1/4" Fixed Male	1 (fig. C)
U – 1/4" Fixed Male	2 (fig. D)

MAXIMUM INLET PRESSURE
1 – 3500 PSIG (238 bar)
2 – 600 PSIG (41 bar)

INLET & OUTLET PORT SIZE	'A' ±.06"
4 – 1/4" (HPIC only)	....
G – 1/4" Male Swivel	4.5"
H – 1/4" Female Swivel	4.5"
L – 1/2" Female Swivel	4.75"
A – 1/4" Male Fixed	3.51"
N – IN Port: 1/4" Male Swivel OUT Port: 1/4" Female	4.5"
R – IN Port: 1/4" Female OUT Port: 1/4" Male Swivel	4.5"
K – 1/2" Male Swivel	4.75"

***HIGH PURITY INTERNAL CONNECTIONS (H.P.I.C.)**
Specify letter 'A' for Tescom High Purity Internal Connections. These are machined inside regulator body and are designed to be compatible with VCR® (or equivalent) male fittings — swivel only.

**** WELDED FITTINGS — Optional at Additional Cost**
Staight tubing or VCR® (or equivalent compatible) fittings welded to the regulator body. Consult factory for specific part number.

FLOW CHART (Metric units are in parenthesis)

REGULATOR DISCHARGE CHARACTERISTIC CURVES

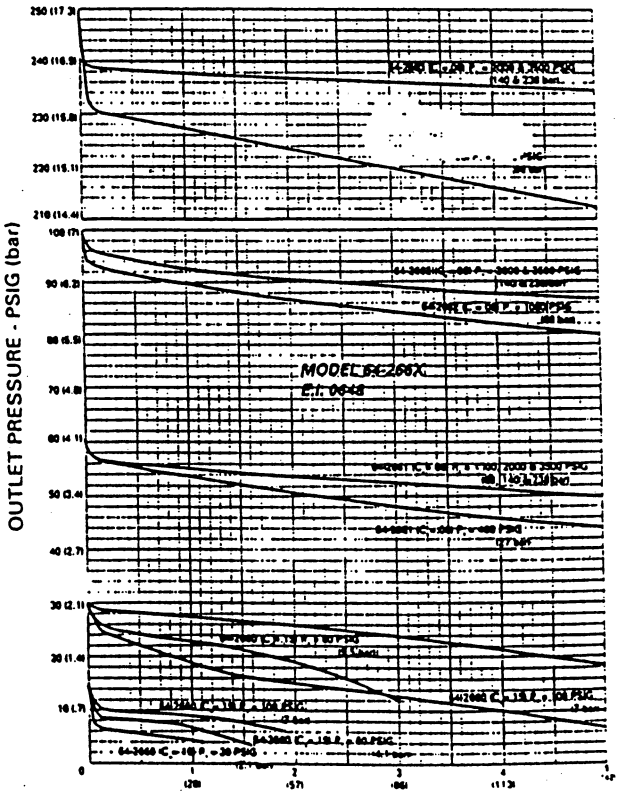

4802

SUGGESTED SOURCE OF SUPPLY:
SPAN INSTRUMENTS

PRESSURE GAUGE
2.3 O.D., 316 SST BOURDON TUBE SOCKET AND TIP WELDED

DIAL DATA:
SIZE (FACE):--------2.0 INCH DIAMETER
RANGE:----------REFERENCE TO TABLE I
ARC OF CALIB.-------270°
ACCURACY----------1% OF SCALE
DIAL FACE:---------DUAL SCALE PSI/BAR

MATERIAL:
CASE:----------316 SST
RING & WINDOW:------SAFETY GLASS
TUBE:----------316 SST
SOCKET:----------316 SST
MOVEMENT:----------SST LINKS AND PINS

CONNECTION:---------SEE TABLE II
CLEANING:----------ANSI B40.1 LEVEL IV

NOTE:

1. SCALES DIFFERENT THAN THOSE SHOWN IN THE TABULATION NOT PERMITTED.
2. BEFORE BOXING GAUGES, CAP THE BOURDON TUBE FITTING OR SEAL IN PLASTIC BAG.

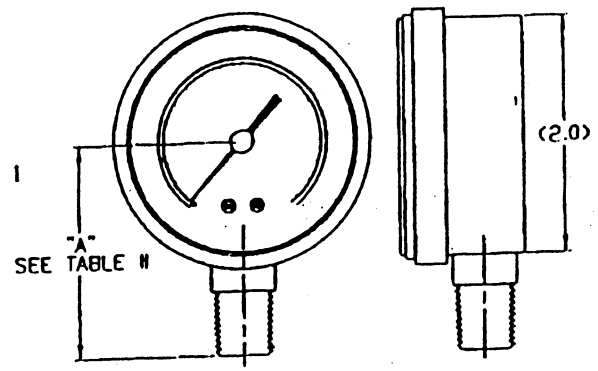

TABLE I

DASH NUMBER	MAX. INDICATION PSIG	BAR EQUIVALENT	INCHES Hg
-0030	30	2	---
-0060	60	4	---
-0100	100	6.7	---
-0200	200	13.3	---
-0600	600	40	---
-1000	1000	66.7	---
-3000	3000	200	---
-4000	4000	266.7	---
-6000	6000	400	---
-V030	30	2	30/1
-V060	60	4	30/1
-V015	15	1.	30/1
-V100	100	6.7	30/1
-10000	10000	666.7	---
-0300	300	20.1	---
-0015	15	1	---
-5000	5000	333.3	---
-0160	160	10.7	---
-V200	200	13.8	30/1

TABLE II

DASH NO.	CONNECTION TYPE	"A" REF.
N.	NPT	1.94
M	CAJON VCR (MALE) SWIVEL	2.24
R	CAJON VCR (FEMALE)	2.24

PART NUMBER DESIGNATION:

4802-0030N-C
- C — CUSTOMER SUPPLIED
- N — CONNECTION: (TABLE II)
- 0030 — MAX. INDICATED PRESSURE (TABLE I)

REV.	DATE	ECO NO.	BY:	APPR.
M	11-1-96	1613-96	JAF	MOL
L	1-25-96	312-96	JAW	DL
K	11-16-95	1696-95	JAW	DL

REVISIONS

REFERENCE DRAWING(S)

TESCOM CORPORATION
HIGH PURITY CONTROLS DIVISION
ELK RIVER, MN 55330

INFORMATION CONTAINED ON THIS DOCUMENT IS THE PROPERTY OF TESCOM CORPORATION. NO RIGHTS ARE CONVEYED NOR IS PERMISSION TO DISCLOSE TO OTHERS GRANTED.

UNLESS OTHERWISE SPECIFIED:
.0 ± .020 ANGLES: ±1°
.00 ± .010
.000 ± .005
SURFACE ROUGHNESS: 125
CHAMFER & FILLET RADII: .005-.010
THREADS: CLASS 2
REMOVE ALL BURRS
(R) KEY CHARACTERISTICS
DRAWING MADE IN THIRD ANGLE PROJECTION
(DO NOT SCALE DRAWING)

MATERIAL:

FINISH:

DRAWN BY:	CHECKED BY:	APPROVED BY:
JAW 11-16-95	DRW 11-16-95	DL 11-16-95

NAME: GAUGE,PRESSURE

SCALE: ---- | SIZE: B | NUMBER: 4802
CODE NO. 13669 | SHT. 1 OF 1

DC

AAN99-100148-OB (B)

File No. MESN99-038-0B
January 31, 2000

MECHANICAL ENGINEERING SAFETY NOTE

Gas Delivery System and Reclamation Cylinders for Gamma Ray Imager, B Revision

Prepared by:

B. Myers

Blake Myers
Mechanical Engineer
New Technologies Engineering Division

Reviewed by:

Tim Ross
Pressure Inspector
Laser Science Engineering Division

Chuck Borzileri 1-31-00

Chuck Borzileri
Pressure Consultant
Applied Research Engineering Division

Dan Archer
Experimental Physicist
C&MS Directorate / NAI Program

Approved by:

S.V. Kulkarni

Satish Kulkarni
Division Leader
New Technologies Engineering Division

Distribution:

Dan Archer, L-186
Chuck Borzileri, L-384
Neil Frank, L-113
Satish Kulkarni, L-113
Blake Myers, L-174
Tim Ross, L-474
Kathlyn Snyder, L-172
Klaus Ziock, L-43
Engineering Records Center, L-118

Purpose:

This revision has the purpose of permitting the addition of components to the time projection chambers (TPCs) in the Gamma Ray Imager.

Situation:

There are two time projection chambers which have been installed on the Gamma Ray Imager. They are covered by MESN99-020-0A which includes the following referenced drawings and which sanctions the use at an MAWP of 978 psig when used with the metal C-ring type blind flange (called a flat head in the safety note), as shown on AAA99-104243, on the main chamber flange, plus the conflat blind flange 4-5/8 D x 0.75 thick on the top chamber flange, plus the 1/2 D VCR plugs modified to give a 0.057 thick window in 5 of the 9 VCR chamber outlets and stock 1/2 D VCR plugs in the remaining outlets. The east chamber in this configuration has been pressure tested at 1470 psig and is tagged for 978 psig for reference and has a 978 psig rupture disc installed to protect this sanction.

The sanctioned MAWP for routine operations is 402 psig when used with the six-hole conflat type flange as shown on AAA99-104240 on the main chamber flange, plus the same conflat blind flange on the top chamber flange, plus the 5 and 4 VCR plugs in the 9 side outlets as above, plus a 2 3/4 D conflat blind flange, modified to give a 0.118 thick x 1.25 D gamma ray window, in the central hole of the six-holer and the five Ceramaseal part no. 19543-04-CF electrical feed thrus or the 1.33 D conflat blind flanges in the remaining five holes. The west chamber in this configuration has been pressure tested to 604 psig

and is tagged for 402 psig for reference and has a 402 psig rupture disc installed to protect this sanction.

The two chambers are connected to the gas handling system via V91, V93, V96 and V97 with Swagelok H016 flex hose rated at 1200 psig. The valves are NUPRO, p/n SS-8BGVCR3-C, rated at 1000 psig. The hoses connect from the valves to two VCRs on the 3 VCR side of the chambers.

The chambers are pressurized by filling with the appropriate measured mass of input gas at the chamber cryo leg temperature and then warming as required.

There is interest on the part of the experimenters in having flexibility in configuring the connections on the TPCs in various ways apart from the basic flex hose connection to the gas handling system. Examples include adding pressure gages and transducers, adding a quartz window, changing the Ceramaseal feedthrus and changing the rupture discs to match the pressure rating of these new components.

Plan:

The plan is very simple. Any departure from the sanctioned configurations shall be signed off by a pressure inspector and involve an independent pressure test of the proposed component(s) at 1.5X the desired MAWP and installation of a rupture disc within the subject circuit set at that MAWP. The proposed components must be used at an MAWP at or below their nameplate pressure rating as well as at or below the basic chamber MAWP. This pressure at the present time for routine operaions is 402 psig.

All departures shall be entered in the TPC log in detail on each occasion and referenced on the following summary sheet in the TPC log.

Summary of Departures from Sanctioned Configuration:

Brief Description	Page No.	New MAWP	Signed By	Date

Interdepartmental letterhead

Mail Station L- 373

Ext: 4-4688

Revision A
END 92-072

AAN93-100021-0A

High Pressure Systems Group
Nuclear Test Engineering Division

September 8, 1993

TO: Distribution

FROM: Matt Traini, Pressure Inspector

SUBJECT: END92-072, REVISION A, PRESSURE TESTING OF VACUUM "CONFLAT" FLANGES

Please replace your existing copy of END92-072 with the current one enclosed. The only difference is the addition of information regarding the pressure testing of 8 inch diameter flanges with viewports. Tests were conducted by Roger Carnahan, Pressure Inspector, High Pressure Laboratory. This information is summarized on page 14.

Distribution:
C. Borzileri, L-384
J. Brentjes, L-373
R. Carnahan, L-373
O. Parker, L-373
T. Ross, L-373
P. Smuda, L-373
H/C File 3-ME Safety Notes
Standards/Specification, L-129
ME Library, L-127
HPL Library, L-373
NTED Division File

University of California
Lawrence Livermore
National Laboratory

AAN93-100021-0A

Mechanical Engineering Note

PRESSURE TESTING OF VACUUM "CONFLAT" FLANGES

By

Matthew W. Traini

November 1992
Revision A, September 1993

Distribution:
C. Borzileri, L-384
J. Brentjes, L-373
R. Carnahan, L-373
O. Parker, L-373
T. Ross, L-373
P. Smuda, L-373
H/C File 3-ME Safety Notes
Standards/Specification, L-129
ME Library, L-127
HPL Library, L-373
NTED Division File

The purpose of this Engineering Note is to summarize pressure tests that were performed on a variety of vacuum "conflat" flanges. Since manufacturers offer no pressure ratings on vacuum components, it was necessary to perform tests at the Lawrence Livermore National Lab (LLNL), High Pressure Laboratory (HPL), Bldg. 343. This would assist designers in determining working pressures and establishing safety guidelines when using.

All the test results are presented in memo format as was originally issued.

The first series of tests involved testing a $1^1/_3$" diameter flange that was welded to a valve and connected to a gas sample cylinder (Refer to memo dated January 27, 1988 to C. Borzileri). Building 343 Test Request (T.R.) #6226 required the testing of both $1\ ^1/_3$" and $2\ ^3/_4$" blank flanges.

The second series of tests are referenced to T.R. 6408 (Refer to memo dated March 31, 1988 to J. Stapleton). These tests involved $4\ ^5/_8$" flanges that were connected to a 2 liter volume.

The final series of test involved pressure testing of $2\ ^3/_4$" vacuum flanges with viewports (Refer to the 3 memos to Brad Maker dated January 23, February 6 and February 23, 1989) on several Bldg. 343 Test Requests.

The mode of failure for the blank flanges, regardless of size, is the assembly bolts would stretch causing gas to vent through the gasket. On several tests, a linear displacement tranducer was used to detect any growth of the flange at test pressure, which proved minimal.

The flanges with Pyrex viewport of course failed at much lower pressures than the blank leaked. It should be emphasized that the failure pressure was very much dependent on the condition of the glass (i.e. scratches or blemishes). Further recommendation for their use are detailed in Engineering Safety Note ENW 89-901.

Interdepartmental letterhead

Mail Station L- 373

Ext: 2-9596

January 27, 1988

TO: Chuck Borzileri

FROM: Matt Traini

SUBJECT: PRESSURE TESTING OF "CONFLAT" VACUUM FLANGES

The purpose of this memo is to document information on test results pertaining to knife-edge type vacuum ("conflat") flanges when used in positive pressure situations.

These components are known to be used in pressure systems throughout the laboratory and because commercial manufacturers offer no pressure (only vacuum) data, it became necessary to perform a series of tests in order to establish guidelines to be followed when using vacuum flanges for pressure requirements.

The nature of these tests evolved as a result of Building 343 Test Request No. 6196. The customer requested us to pressure test a gas sample bottle that consisted of a 1-1/3" Ø vacuum flange welded to a valve. This assembly was then threaded to the sample bottle. The area of concern was the weld integrity between the flange and valve and the pressure at which the flange would leak or fail. Therefore, test requests were generated internally in order to obtain this information. These results will be explained later in this report.

The results summarized in this document were comprised of three separate Building 343 Test Requests: T.R. #6202 tested the weld integrity between the conflat flange and valve. T.R. #6226 determined at what pressure a conflat flange will begin to leak. The purpose of T.R. #6196 was to proof-test the gas sample bottle assembly. Figures 1, 2 and 3 illustrates each of these arrangements.

All tests were performed using knife-edge "conflat" flanges and copper gaskets. Tests performed on 1-1/3" Ø flanges used #8-32 bolts and were torqued to 70 in-lbs. (5.8 ft-lbs.). The 2-3/4" Ø flanges used 1/4-28 bolts and were torqued to 192 in-lbs. (16 ft-lbs.). An anti-seize lubricant ("Silver Goop") was used on all threads.

Each test was performed using helium. New gaskets and bolts were used for each run. Results are summarized below.

T.R. #6202

The purpose of T.R. #6202 was to test the weld joint between the valve and flange and to determine the weakest point in the assembly. The flange tested was an MDC Model No. F133000 (1-1/3" Ø blank flange). The valve that was threaded and then welded to the flange was a Whitey "DK" series shut-off valve, Model No. SS-14DKM4 rated for 3,000 psi.

Testing procedure included pressurizing flange/valve assembly and then isolating the flange from the valve and checking leak pressure across the valve stem.

Five assemblies were tested. In all cases except one, the vacuum flange was the first to fail. The average pressure where leakage occurs for the tests performed was at 10,970 psi, with a range of 10,150 to 12,700 psi. With the flange isolated from pressure, leakage at the valve stem occurred at an average of 12,200 psi, with a range of 9,700 to 13,400 psi. This valve confirmed an industry standard of a 4 to 1 safety factor on valves.

It should be noted that failure in all cases were not catastrophic, but took the form of small leaks. No failure concerning the welds were noted. The stainless steel bolts used to assemble the flanges stretched 0.010 - 0.020 inches in length under pressure allowing the flanges to separate from each other resulting in leakage at the gasket.

T.R. #6226

The purpose of T.R. #6226 was somewhat similar to T.R. #6202. However, both 1-1/3" Ø and 2-3/4" Ø flanges were tested. Also, tests were made for flanges with stainless steel and Grade 8 alloy bolts in order to make comparisons. In addition, a linear variable differential transformer (LVDT) was used to measure flange movement when subjected to a pressure load. Three tests were performed for each size flange and bolt material in order to obtain an average value.

The 1-1/3" Ø flanges assembled with stainless steel bolts leaked at an average of 15,170 psi. The same size flange assembled with alloy bolts leaked at an average of 14,170 psi.

The 2-3/4" Ø flanges (MDC Model No. F 275000) assembled with stainless steel bolts leaked at an average of 5,050 psi; at 4,860 psi with those assembled with alloy bolts.

The LVDT measured movement in the center of the test flange and ranged from 0.0005 to 0.001 inch at full pressure. It should be noted that a new flange was used for each test to eliminate any cumulative fatigue that may have occurred.

T.R. #6196

The final portion in this series involved proof-testing the gas sample bottles with the valves and flanges in position. The cylinders were a Whitey Part No. 304L-HDF4-500. Their volume was 0.5 liter and a 1800 psi maximum operating pressure. Testing pressure was 2,700 psi. A total of 9 vessels and 5 valve/flange assemblies were tested. An Engineering Safety Note should have accompanied this test request in order to certify these vessels. An identifying T.R. number was etched on each vessel and released to the customer. However, it was made clear that an Engineering Safety Note needed to be provided in order to use the valve/flange assembly with the Whitey vessel for their intended purpose.

Conclusion:

It should be noted that the intention of these tests were to provide guidelines for usage of "conflat" flanges. Any modifications to hardware may alter test results and would require additional engineering and testing. Therefore, it is necessary to understand under what conditions results were derived from and decisions can be made accordingly. It should be further emphasized that failure was not catostraphic, but rather took the form of a small leak resulting from flange bolts stretching and allowing gas to pass between the gasket and "knife-edge" seal.

If there are any questions regarding these tests, please contact me at (415) 422-9596.

Matt Traini

Matt Traini
High Pressure Laboratory
Building 343

0264mt

Distribution:

D. Frischknecht	L-373
T. Gates	L-236
D. Holten	L-122
O. Parker	L-373
B. Schleicher	L-122

SUBJECT

SKETCH

LAWRENCE LIVERMORE LABORATORY
UNIVERSITY OF CALIFORNIA

DRAWN BY M. TRAINI

DATE 23 DEC 87 | BUILDING NO. 343 | ROOM NO. | APPROVED BY | DATE

JOB ORDER INFORMATION: JOB NO. | SERIAL NO. | DATE ISSUED | DELIVER TO

TAG NO. Revision A
NO. END 92-072
Page 6

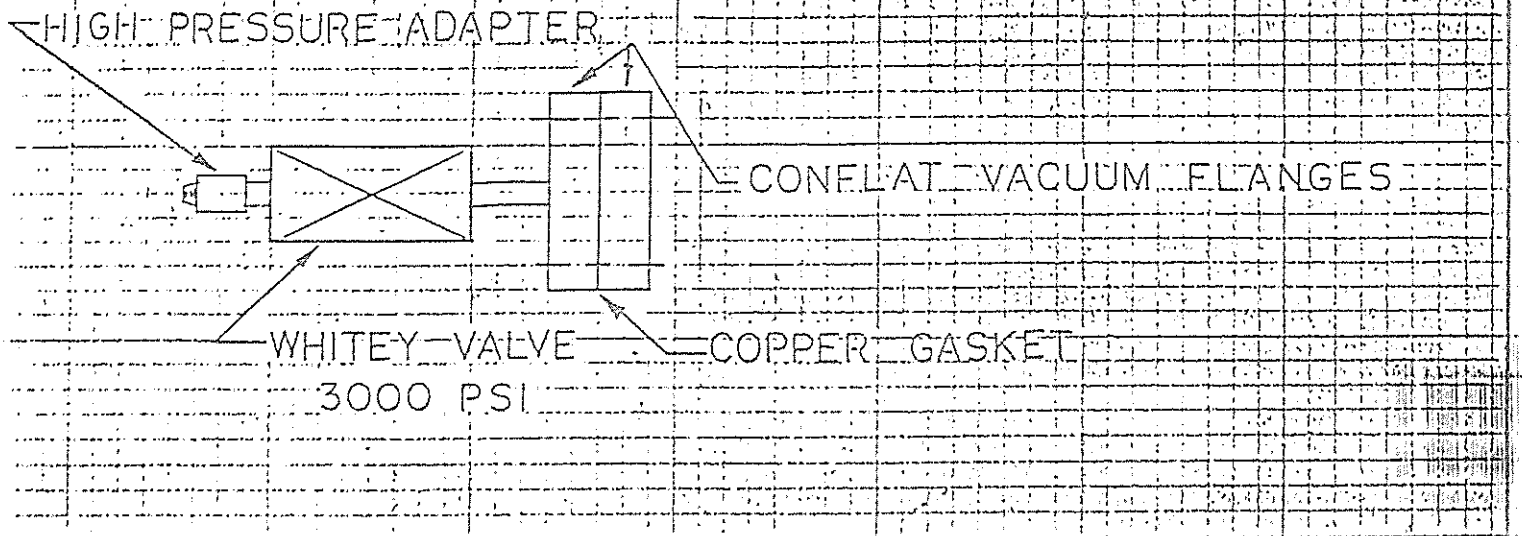

FIGURE 1: VALVE - FLANGE ASSEMBLY
(T.R. 6202)

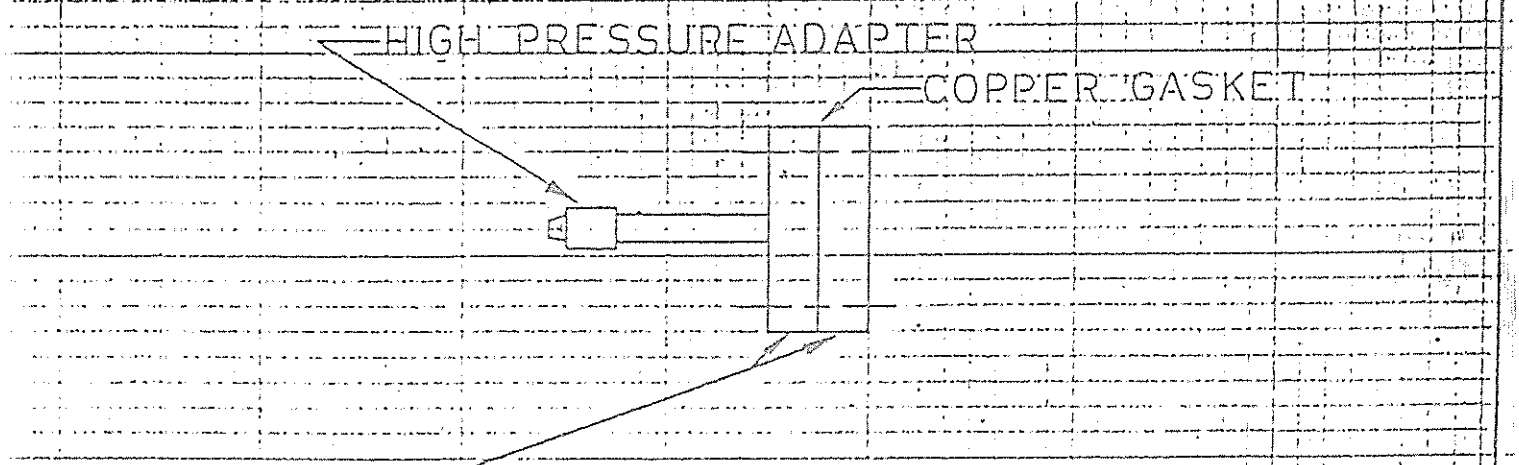

FIGURE 2: FLANGE - BLANK ASSEMBLY
(T.R. 6226)

SKETCH NUMBER

SUBJECT	SKETCH	JOB ORDER INFORMATION	TAG NO. END 92-072
DRAWN BY M. TRAINI	LAWRENCE LIVERMORE LABORATORY UNIVERSITY OF CALIFORNIA	JOB NO. SERIAL NO. DATE ISSUED	REQD. Page 7 DATE REQD.
DATE 23 DEC 87 / BUILDING NO. 343 / ROOM NO. / APPROVED BY / DATE		DELIVER TO	

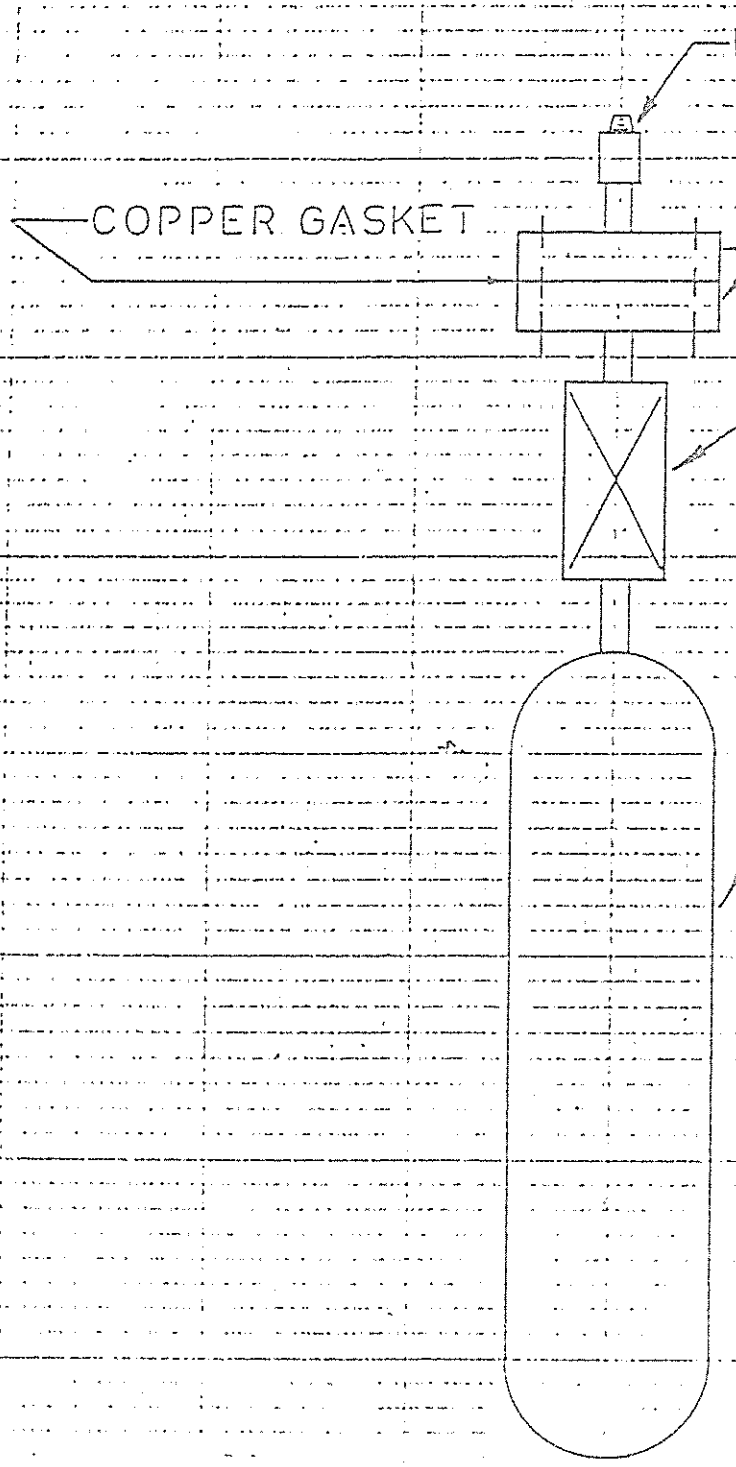

SKETCH NUMBER

FIGURE 3: GAS SAMPLE BOTTLE ASSEMBLY (T.R. 6196)

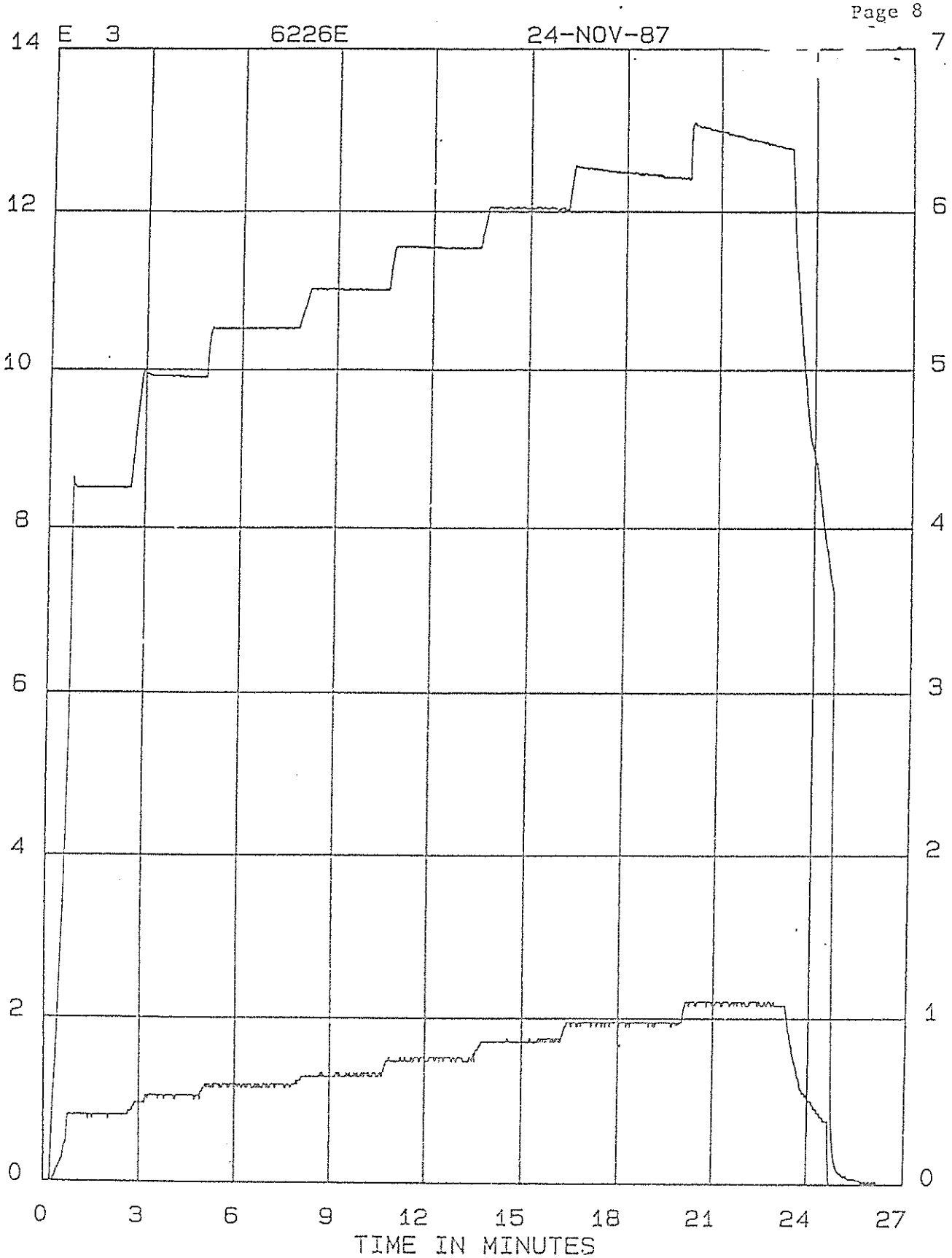

NAME OF EXPERIMENTER MATT TRAINI
NAME OF OPERATOR MATT TRAINI
1 PSIG 30K TD REL MAX= 0.1310E+05
2 MILS LVDT MAX= 7.000 MIN= 0.0000

Interdepartmental letterhead
Mail Station L-373
Ext: 2-9595

March 31, 1988

TO: Jerry Stapleton

FROM: Matt Traini - High Pressure Laboratory

SUBJECT: PRESSURE TESTING OF 4 5/8" Ø "CONFLAT" VACUUM FLANGES

The following is an explanation of pressure tests performed on 4 5/8" Ø "Conflat" vacuum flanges. These tests are referenced to Bldg. 343 Test Request No. 6408.

Two test assemblies were provided and the flanges were bolted together using 12 point stainless steel capscrews. Each of the vessels were initially hydro tested to 1200 psi and no leaks were present. The purpose for the initial hydro testing was to minimize any catastrophic failure that may have occurred due to the relatively large volume (approximately 2 liter) of the assemblies. In addition, 300 psi NPT fittings were welded into the assemblies (for testing purposes only) and this was also an area of concern. Each assembly was tested separately and initially pressurized to approximately 500 psi. Pressure increased in 50 to 100 psi increments to a maximum test pressure of 1200 psi. These tests are referenced to T.R. 6408B and 6408C.

Following hydro testing the vessels were disassembled and cleaned. They were reassembled using new stainless steel hardware and gaskets and tightened to a specified torque of 9 ft-lbs. Next, they were pressurized with helium in 100 psi increments until a helium mass spectrometer could detect any leaks. Following the series of tests using stainless steel hardware, the vessels were reassembled using grade 8 alloy steel cap screws. They were tightened to a specified torque of 30 ft-lbs. These results are referenced to T.R. 6408D thru 6408H and are detailed at the end of this memo.

It should be noted that no significant conclusions could be drawn when comparing alloy bolts to stainless steel hardware. Past similar tests indicate there is no pressure advantage using one over the other.

New hardware was used for each test and the bolt lengths were measured before and after testing. No increase in bolt length occurred. In addition, the portion of the adapter where the cap was welded on was measured before and after testing. No growth was evident. Refer to the attached data for the pressure/time plots for each test.

Test No.	Assembly No.	Fluid	Hardware	Leakage / Range
6408B	#1	Water	SST	No leaks @ 1200 psi
6408C	#2	Water	SST	No leaks @ 1200 psi
6408D	#1	Helium	SST	930 psi / 10^{-6} Torr
6408E	#2	Helium	SST	500 psi / 10^{-6} Torr
6408F	#2	Helium	SST	525 psi / 10^{-6} Torr
6408G	#1	Helium	Alloy	550 psi / 10^{-6} Torr
6408H	#2	Helium	Alloy	900 psi / 10^{-6} Torr

If there are any questions regarding these tests, please contact me at Ext. 2-9596.

Matt Traini

Matt Traini
High Pressure Laboratory

0281mt

Distribution:
C. Borzileri L-384
D. Holten L-122
O. Parker L-373
B. Schleicher L-122

Interdepartmental letterhead

Mail Station L- 373

Ext: 2-9596

January 23, 1989

TO: Brad Maker

FROM: Matt Traini
High Pressure Laboratory

SUBJECT: PRESSURE TESTING OF CONFLAT FLANGES WITH PYREX VIEWPORTS

The purpose of this memo is to summarize work performed under Bldg. 343 Test Request No. 6709.

Five VARIAN conflat flanges, 2 3/4" diameter, with Pyrex windows were to be pressurized with helium gas to failure. Pressure was increased in 10 psi increments with a one minute hold at each pressure. The flanges were assembled using copper gaskets. Following manufacturer's specifications, the bolts were tightened to 16 ft-lbs. New bolts and gaskets were used for each flange.

The test results are summarized in the table below.

Flange Number	Failure Pressure, psig	Nature of Glass
6709 A	108 psig	Normal
6709 B	39	2 Scratches
6709 C	140	Normal
6709 D	116	Normal
6709 E	54	1 Scratch

If there are any questions regarding these tests, please contact me at Ext. 2-9596.

Matt Traini

Matt Traini
High Pressure Laboratory

0358mt

Distribution:
D. Holton
O. Parker

University of California
Lawrence Livermore
National Laboratory

Interdepartmental letterhead

Mail Station L- 373

Ext: 2-9596

February 6, 1989

TO: Brad Maker, L-125

FROM: Matt Traini

SUBJECT: Testing of MDC flanges with Pyrex viewports

The purpose of this memo is to summarize work performed under Bldg. 343 Test Request No. 6726.

Three MDC "conflat" flanges, part number VP-150 (2 3/4" diameter), were pressurized with helium gas to failure. Pressure was increased in 10 psi increments with a 30 second hold at each pressure. The flanges were assembled using copper gaskets and bolts were tightened to 16 ft-lbs. New hardware was used on each of the flanges and threads were lubricated with "Silver Goop". Tests were similar to those performed previously under Test Request No. 6709 where VARIAN flanges were used.

Mention should be made regarding the types of failure. With the VARIAN flanges (TR 6709), the viewports fractured into small pieces. With the MDC flanges (TR 6726), the viewport actually separated intact from the seam of the flange.

Test results for the MDC flanges are summarized in the table below:

FLANGE NUMBER	FAILURE PRESSURE
6726A	190 psig
6726B	110 psig
6726C	141 psig

If there are any questions regarding these tests, please contact me at ext.2-9596.

Matt Traini

Matt Traini
High Pressure Laboratory

Distribution:
D. Holten L-122
O. Parker L-373

University of California
Lawrence Livermore
National Laboratory

Interdepartmental letterhead

Mail Station L- 373

Ext: 2-9596

February 23, 1989

TO: Brad Maker

FROM: Matt Traini

SUBJECT: PRESSURE TESTING OF CONFLAT FLANGES WITH PYREX VIEWPORTS

The purpose of this memo is to summarize work performed under Bldg. 343 Test Request No. 6741.

It was requested that three VARIAN flanges were pressurized with helium gas to failure. The flanges were 2-3/4" diameter. These tests were similar to those previously performed under Test Requests 6709 and 6726. The purpose for testing this set of flanges was to determine if there had been any degradation caused by cleaning the flanges in a caustic solution. The flanges were assembled using copper gaskets and the hardware used for assembly were lubricated with "Silver Goop". The bolts were tightened to 16 ft-lbs. All three viewports fractured into small pieces upon failure.

Results for this series of tests as well as previous ones are summarized in the table below.

FLANGE NUMBER		NATURE OF GLASS	FAILURE PRESSURE, PSIG
6741	A	Normal	180 psig
	B	Normal	250
	C	Normal	150
6726	A	Normal	190 psig
	B	Normal	110
	C	Normal	114
6709	A	Normal	108 psig
	B	2 Scratches	39
	C	Normal	140
	D	Normal	116
	E	1 Scratch	54

Matt Traini

Matt Traini
High Pressure Facility

0359mt
Distribution:
D. Holten L-122
O. Parker L-373

This additional information regarding the proof and burst testing of new 8" O.D. vacuum "conflat" flanges with viewports is being added to the existing engineering note. These series of tests were performed under Bldg. 343 Test Request number 1489 by Roger Carnahan.

Viewports from 2 manufacturers' were supplied for the tests and results are summarized below:

Flange Mfg.	Proof Pressure/Hold Time	Burst Pressure
MDC	15 psig/15 minutes	
Varian	15 psig/15 minutes	
MDC		54 psig

Two of the flanges were taken to proof test pressure with no leaks and the third to burst. Upon burst, the entire viewport remained intact and separated from the seam of the flange. This is the same type of failure that had occurred on the smaller 2 $^{3}/_{4}$" diameter flanges (MDC) with viewports (see pg. 12).

It should also be stated that as an added safety precaution, a lexan shield should be installed over the viewport in the event of a failure.

ASME Code Qualification of ConFlat Flanges

Overview

ConFlat (CF) flanges or their equivalent are available from a number of vacuum supply companies (i.e. MDC Vacuum, Kurt J. Lesker Co., NorCal, etc.). They have been designed for vacuum service only. It has been standard practice at a number of facilities, Jefferson Lab being one, however, to use these fittings as pressure fittings where high purity and extremely cold (<4.5K) (non permanent or semi permanent) connections are required. Figure 1 gives a cutaway view of a typical CF connection. The all metal leak tight seal is achieved by extruding the gasket between the opposing conical sealing (knife) edges. This causes the gasket material to flow against the capture rings. The extruded gasket material fills small imperfections in the sealing surfaces and provides a reliable leak tight seal. It is commonly thought that the actual sealing surfaces are the knife edges. We will assume, however, that they are the outer capture rings.

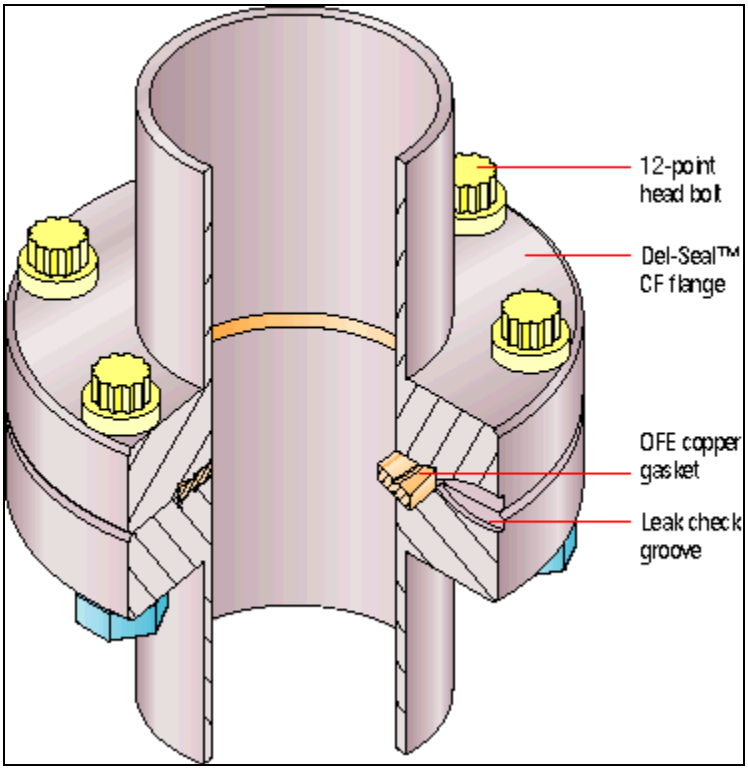

Figure 1: Cutaway view of CF assembly. From MDC Vacuum Catalog.

The purpose of this technical note is to qualify as much as possible the CF flange connection for use in ASME (B31.3 and Section VIII Div. 1) coded pressure systems and components. Pressure design of flanges and blanks is covered in Appendix 2 of the ASME Boiler and Pressure Vessel Code Section VIII Div. 1. Other necessary

information is contained in Appendix S of the same code. The B31.3 code, for process piping, (Section 304.5) refers to this section of the B&PV code for flange design.

UG-34 Eq (2) of Section VIII gives the required minimum thickness for a blank flange or flat cover as

$$t = d\sqrt{CP/SE + 1.9Wh_g/SEd} \quad (1)$$

where

C is a constant determined by flange geometry. Using sketch (k) it is 0.3

d is the mean gasket diameter

P is the pressure loads

W is the gasket seating bolt load

E is a casting factor

h_g is the

A slight modification of this equation should be used. The pressure seal should be taken as the gasket OD. The gasket seating moment arm h_g is determined as the radial distance from the bolt circle to the knife edge. The first term in the radical considers on the pressure load. The second term considers only the moment from the bolt load. Thus, the minimum thickness of the CF flange is given by

$$t = \sqrt{CPd_g^2/SE + 1.9Wh_g d_k/SE} \quad (2)$$

where

d_k is the knife edge diameter

d_g is the gasket ring diameter

An expression for stress can easily be derived from the above equation for a given thickness. The standard CF flange available from MDC can be supplied with a certificate of conformance. This states that the material is SST 304. From Table 1A in Section II of the ASME B&PV code, the maximum allowable stress for SST 304 plate is 20 ksi.

Test Procedure

Materials

The following is a list of the tools and materials used to assemble the CF test joints.

1. Torque wrenches
   1.1. Kobalt 3/8 drive (Ser#1001500784)
   1.2. KD ¼ drive (Ser#991135747)
2. Snap-On torque tester (Ser # 0699800012) calibrated.
3. Transducer Techniques load cell Model THC-7.5K-S Serial # 114657
4. Test flanges were supplied by MDC vacuum
5. Gaskets (both OFHC copper and aluminum) were supplied by Kurt J. Lesker Co.
6. Loctite 51609 anti-seize
7. Bolting hardware (18-8 SST nuts and bolts no washers were used)
   7.1. 1.33” nominal flange hardware from Kurt J. Lesker Co.

7.2. 2.75" and 2.125" flange hardware from Kurt J. Lesker Co. (1/4-28 x 1.25 12pt)
7.3. 13.25" flange hardware from York Bolt (3/8-24 x 3.5 HHCS)
7.4. All other flanges (5/16-24 x 3.5 12pt) from Kurt J. Lesker Co.

Torque wrench calibration

It is recognized that there will be significant error in the actual bolt torque for an individual technician using a given torque wrench. In an effort to minimize this error and quantify it, the technician performing all assembly work and torque wrench calibration/force measurements was kept constant. Both torque wrenches are "snap" type. The assembly technician and torque wrenches were checked for consistency using the Snap-On torque tester at multiple torque settings. Table A1 in Appendix A summarizes the measurements made to check the consistency of the small ¼ inch drive KD torque wrench and technician. Measurements were made at 10, 20, 30, 40, and 68 inch pounds. Similar measurements were also taken with the Kobalt 3/8 in drive torque wrench at larger values of torque. These data are shown in Table A2.

While it is necessary to understand the consistency of the actual torque, it is most important to know the actual force (bolt load) relative to a given torque setting. The total bolt load will be required in the analysis of the flange and fastener stress. It is common practice to determine the force on a bolt assembly using the standard equation for fastener torque τ

$$\tau = kFD \quad (3)$$

Where

k is a coefficient determined by friction geometry etc.

F is the bolt load force

D is the nominal outer diameter of the fastener

The coefficient k is nominally taken as 0.2 in many conditions and Machinery's Handbook suggests 0.18 for lubricated assemblies. For our case, however, it is proper to measure the value of k where possible. Indeed it is even better to measure the absolute force applied by the fastener for a given torque setting. The load cell was used to determine the actual force applied by a given fastener for a given toque setting. Figure xxx shows the technique. Measurements were performed with both torque wrenches at several torque settings. These data are summarized in Table A3. Accounting for torque consistency and load cell error, the data indicate that a conservative error for absolute force applied is 10%.

CF test assemblies

The test assemblies were made by assembling two blank CF flanges with a copper gasket (from Lesker) and, when available, aluminum gaskets (from Lesker). The flanges were tightened using the cross flange pattern recommended in the MDC catalog until the flanges were visibly close to "metal to metal". At this point, the fasteners were torqued in a clockwise pattern until the flange faces were visibly "metal to metal". This is the

standard practice of many of the technicians at Jefferson Lab. No washers were used on any assembly. In all cases, a backing wrench was applied to the nut and the torque wrench was applied to the bolt head (see Figure xxx).

The torque was incrementally increased in 5 inch lb steps when using the smaller KD wrench and in 1 ft lb steps when using the Kobalt wrench. The fasteners were tightened at a given torque setting in repeated patterns until no rotation was felt. If needed the torque setting was increased and the tightening pattern repeated. The final torque setting was recorded. In the case of the smaller flange sizes, many assemblies were measured. In all cases (with the exception of the aluminum seals), at least 2 assemblies were measured. No measurable deviation in torque required to complete the assembly was found at any flange size, thus it is felt that more test assemblies are unnecessary. Assemblies using "plate nuts" (Ref 1) were also tested.

After the initial gasket crushing assembly, the bolts were loosened to less than finger tight and retightened following the same procedure above so that the flanges were again "metal to metal". This was done to determine the gasket sealing torque. This is the final gasket seating torque required to maintain a leak tight connection. The final gasket seating torque values were also recorded.

Results

The torque values required to make each CF connection are summarized in Table xxx. The 1.33 and 2.75 (aluminum gasket only) inch CF joints were assembled using the KD torque wrench. All other assemblies were performed with the Kobalt torque wrench.

Nominal Flange Size (in)	Torque Cu (in lb)	Torque Al (in lb)
1.33	40	31
2.125	163.2	n/a
2.75	163.2	67
3.375	197.5	142
4.5	217.7	142
4.625	190.4	n/a
6	217.7	163.2
8	246.8	146.8
10	260	163.2
13.25	330	n/a

Table 1: Torque values required to make CF assemblies "metal to metal"

Analysis

Flanges

The actual force required to make the CF seal was determined from the final torque wrench setting and the data in Table A3. It is clear from equation (2) that an expression

for stress in the flange may easily be derived. Table xxx shows the final bolt loads for copper gasket assemblies.

Fasteners

Appendix A

This appendix contains the torque wrench consistency and calibration data.

Table A2 : Torque consistency data for 1/4 inch drive KD torque wrench all data are in inch pounds

Torque Setting (in-lb)	10	20	30	40	68
Data	12.7	24	32	40.1	66.1
	12.7	22	29.4	39.9	66.9
	13.9	19.2	29.1	39.6	66
	13.9	20.8	28.4	38.5	67
	11.1	19.3	29.4	40.4	67.7
	11.6	20.3			66.9
	12.1				
	11.1				
	12.6				
	11.1				
	10.6				
Average	12.12727	20.93333	29.66	39.7	66.76667
Std dev	1.137621	1.823915	1.370401	0.731437	0.631401

Table A3: Torque consistency data for 3/8 inch drive Kobalt torque wrench all data are in inch pounds

Torque Setting (ft-lb)	10	11	12	13	15	16	17	18	19	20
										.
Data (in-lb)	117	131	142	168	182	191	219	236	243	250
	121	131	144	162	182	196	215		247	256
	115.2	138	146	162	189	195	217		247	260
	117.2	140	138	159	178.3	198	212		247	252
	117.2	142	146.6	161.7	194	196	212		243	245
		140		150	179	195	209		243	241
				151	188				243	252
				148						
				150						
				156						
				157						
Average	117.5	137	143.3	156.8	184.6	195	214	236	245	251
Std deviation	2.119	4.8	3.48	6.423	5.829	2.3	3.7		2.1	6.4

Table A3: Torque wrench setting to absolute force calibration data

Torque wrench setting to force calibration Excitation voltage is 10V 2mV per V full scale (7500 lb)									
				Kobalt wrench					
Torque setting	Torque Setting	Actual torque	Error	Load Cell readout	Fastener OD	Force	Coefficient	Error	Error
(ft lb)	(in-lb)	(in-lb)	Torque (in-lb)	(mV)	(in)	(lb)	K	K	Force (lb)
10	120	118	2	5.35	0.313	2006.25	0.19	0.01	112.0501604
11	132	137	5	5.81	0.313	2178.75	0.20	0.01	134.479561
12	144	143	3	6.34	0.313	2377.5	0.19	0.01	133.3982048
13	156	157	6	6.77	0.313	2538.75	0.20	0.01	161.0098237
14	168	168	0	7.57	0.313	2838.75	0.19	0.01	150.1375589
15	180	185	6	7.95	0.313	2981.25	0.20	0.01	178.7758102
16	192	195	2	8.76	0.313	3285	0.19	0.01	176.4593824
17	204	214	4	9.75	0.313	3656.25	0.19	0.01	207.1244576
18	216	236	0	10.45	0.313	3918.75	0.19	0.01	203.6701817
19	228	245	2	10.86	0.313	4072.5	0.19	0.01	214.4773258
20	240	251	6	11.77	0.313	4413.75	0.18	0.01	264.8551591
21	252	252	0	12.28	0.313	4605	0.17	0.01	263.3922946
22	264	264	0	12.74	0.313	4777.5	0.18	0.01	270.6087294
25	300	300	0	13.66	0.313	5122.5	0.19	0.01	273.7707319
27	324	324	0	14.36	0.313	5385	0.19	0.01	280.1371736
27	324	324	0	9.16	0.375	3435	0.25	0.01	136.5651042
KD wrench									
	20	21	2	0.87	0.313	326.25	0.21	0.02	44.40902721
	30	30	1	1.41	0.313	528.75	0.18	0.01	34.08049604
	40	40	1	1.91	0.313	716.25	0.18	0.01	43.95591393
	50	50	0	2.47	0.313	926.25	0.17	0.01	53.70698531
	68	67	1	3.41	0.313	1278.75	0.17	0.01	78.73891481

JOHANSING IRON WORKS

Heat Exchangers, ASME Pressure Vessels & Tanks

HYDROSTATIC TEST CERTIFICATION

DATE: 5-27-2010

The following reference pressure vessel(s) were succesfully hydrostatically tested in accordance with the ASME Code Section VIII, Section 1.

JOHANSING JOB #: 6528

CUSTOMER: Lawrence Bereley National Labs

PURCHASE ORDER #: 6922618

NATIONAL BOARD #: N/A

VESSEL SERIAL #: 6528

GAUGE #: 3259

GAUGE RANGE: 0-2000

GAUGE CALIBRATION DATE: 5-6-2010

HYDROSTATIC TEST PRESSURE: 550 PSI

VESSEL DESCRIPTION: ~~1/2"~~ 1 1/4" OD 304 S/S Pipe Spool x 10.0"

OTHER:

2955 Ford St.
Oakland, CA 94601

(510) 261-1800
FAX (510) 261-1870

CERTIFIED BY: Quality Control Manager, Johansing Iron Works, Inc.

WITNESS BY: signature Tom Miller

Name: print name Tom Miller

Derek Shuman

TITLE:

LAWRENCE LABORATORY BERKELEY
Mr. Derek Shuman
Mail Stop 46R0125
1 Cyclotron Road
Berkeley, CA. 94720

06/23/2010
Laboratory No: B427
Client No.: New
PO No.: 450824
Page 1 of 1

Mr. Shuman:

SUBJECT: Hydrostatic test on a stainless steel octagon chamber.

TEST: At your request Testing Engineers Inc. has conducted Hydrostatic Pressure Test on one (1) MFC6DO-S0200 800 Octagon Chamber. Utilizing a Richard Dudgeon Test Pump (Model 7-TSS.1 6000 PSI capacity s/n 5453), and a calibrated pressure gage (s/n 7624 0 to 600 PSI).

PROCEDURE: The chamber was placed on a table attached to the hydrostatic pump. The chamber was then filled with water and pressurized until a pressure of 525 PSI was obtained. The test pressure was held for a minimum of five (5) minutes.

RESULTS: No leaks or loss of pressure were observed during the test. The chamber was then visually examined for sign of distress, none were apparent.

NOTE: Testing was witnessed by Mr. Derek Shuman and Mr. Tom Miller of Advanced Light Sources, Lawrence Laboratory Berkeley.

If you should have any questions concerning this test or if we may assist you in any other way please call at 1-510-835-3142 ext. 106.

TESTING ENGINEERS, INC.

By Jack A. Snow

Jack A. Snow
Materials Testing Technician

Attachments:

The results presented in this report relate only to the items(s) tested.
This report can be reproduced only in its entirety unless written permission from TEI is obtained

TECHNICAL SERVICES GROUP

2900 Main St Alameda CA 94501 Phone (510)522-8326 Fax (510)522-3136

Certificate of Calibration

TESTING ENGINEER, INC.
2811 TEAGARDEN ST
SAN LEANDRO
CALIFORNIA 94577

Customer ID #	**2103**	*Rated Accuracy*	**1%**
File #	**321**	*Pass/Fail as Found*	**PASS**
Instrument Type	**PRESSURE GAUGE**	*Pass/Fail as Left*	**PASS**
		1st (Mfg) S/N	**7624**
Range	**0-600**		
Units	**PSIG**		
Resolution	**20**	*2nd S/N*	**N/A**
Mfg.	**CPI**		
Model	**2.5-600**	*Cal Date*	**6/21/2010**
Cal By	**R.K. STRAHL**	*Cal Due*	**6/21/2011**
		Notes	
Curent Cal Cycle (Months)	**12**		
Previous Cal Cycle	**12**		
Standards Used	**AMETEK PK-654WC S/N 73272 DUE 1/28/2012 NIST# 35817.001**		

TECHNICAL SERVICES GROUP CERTIFIES THAT THIS INSTRUMENT HAS BEEN CALIBRATED TRACEABLE TO THE NATIONAL INSTITUTE OF STANDARDS AND TECHNOLOGY AND CONFORMS TO ISO 10012 AND ANSI / NCSL Z-540. UNLESS OTHERWISE SPECIFIED MEASURMENT UNCERTAINTIES ARE LESS THAN 1/4 OF TOLERANCE OR 1 MINOR DIVISION.

JOHANSING IRON WORKS

Heat Exchangers, ASME Pressure Vessels & Tanks

HYDROSTATIC TEST CERTIFICATION

DATE: 6/30/2010

The following reference pressure vessel(s) were succesfully hydrostatically tested in accordance with the ASME Code Section VIII, Section 1.

JOHANSING JOB #: 6528

CUSTOMER: UC Lawrence Berkeley National Lab.

PURCHASE ORDER #: 6926046

NATIONAL BOARD #: N/A

VESSEL SERIAL #: N/A

GAUGE #: 4096

GAUGE RANGE: 0-1000 psi

GAUGE CALIBRATION DATE: 5/8/10

HYDROSTATIC TEST PRESSURE: 550 psi

VESSEL DESCRIPTION: 1/2" S/S x 15" Long

OTHER:

CERTIFIED BY:

Quality Control Manager, Johansing Iron Works, Inc.

Derek Shuman

WITNESS BY: Tom Miller Name: Tom miller

signature print name

TITLE:

2955 Ford St.
Oakland, CA 94601

(510) 261-1800
FAX (510) 261-1870

PICK LIST

Location Group: MDCP Description: MDC PICKING

Pos	Del / Warehouse / Lot/Batch No	Part Number	Bay	Eng Revision / Row / Pallet Id	Tier	Description / Bin / Serial No	Package Part / Wanted Delivery / EC	Delivery Date / Quantity	Expiration Date / Unit	Qty p
1	1	110008		C		REF# F275000				
	Building 3		Main	C	09	AE	06/10/2010	06/24/2010 12.0		
	*			*		*	1	1.00	EACH	

End of Report:

Return Policy:

- Unused standard catalog items may be returned within 60 days of the date the item was shipped, provided the item is properly packaged and shipping charges are pre-paid.
- Special order items may not be returned without specific, pre-approval from MDC.
- All returns must have a RMA number assigned by Customer Service.
- Returned items will not be accepted if the revision has changed or the material is now obsolete. Please check with Customer Service prior to returning items.
- Installed, used or damaged items are not eligible for reprocessing and will be returned with no credit applied.
- A minimum of 25% restocking fee applies.
- Items should be returned freight prepaid as collect shipments will not be accepted.

NOTE:

There will be up to a $500.00 evaluation charge for non-warranty repairs. This evaluation fee will be credited to the repair cost if the repair is ordered.

The evaluation fee plus applicable return shipping charges will be assessed for any returned item you elect not to repair.

A $50 fee will be applied to any returned item requested to be scrapped.

ORDER INFORMATION

Delivery Address:	JOHANSING IRON WORKS 2955 FORD ST OAKLAND, CA 94601 UNITED STATES
Delivery Site:	MDC VACUUM PRODUCTS
Terms of Delivery:	SHIPPING POINT
Ship Via:	FED EX GROUND
PO Number:	011349
Route Id:	
Forward Agent:	
Label Note:	
Our Reference:	CUSTOMER SERVICE

TELEPHONE: 2611800 FAX: 261 1870

Certificate of Conformance

This is to certify that the material referenced on the above PO and listed on the attached pick list were manufactured to the customer's requirements or to MDC's internal drawing and specifications.

Materials used in the production of this order are certified as new and not counterfeit. Any deviation to specifications has been authorized by the customer.

MDC Vacuum Products is an ISO 9001:2008 registered company. Key elements of our fully implemented Quality Management System include our Quality Manual, Quality Policy, Product Objectives, Process Measurements, Design Capability and Validation, detailed production Process Travelers, Corrective / Preventive Action System, Nonconforming Material System, Calibration, First Article / First Piece / CNC Program Qualification Process, Internal Audits, and Sub-Supplier Program.

Quality Management Contacts:

MDC, VPD, Hayward, CA (510) 265-3500
MDC, ISI, Sarasota, FL (941) 751-2880
MDC, SSD, San Jose, CA (408) 350-0244

Pipe/Tube Manufactured by

Brismet

BRISTOL METALS, LLC
IN BRISTOL, TN, USA

MILL TEST REPORT

RM ID NUMBER
103309

SALES ORDER / RLS
004752 / 2

CERT ID / REV
00030402 / 01

SOLD TO

SOUTHWEST STAINLESS
8505 MONROE RD
HOUSTON, TX 77061
USA

CUSTOMER P.O.	CUSTOMER PART	HEAT NO.
199262		975688

DESCRIPTION:300501003120100
.5" WELDED PIPE SCHED 10S TP304/TP304L (UNS# S30400/S30403) A312

CERTIFICATION REQUIREMENTS

ENGINEERING
ASTM A312-08a ASME SA312-07, 08 ADD.

HYDRO PRESSURE
2,500 PSI

HEAT TREAT
Annealed at1900 Deg F. and water quenched to below 800 Deg. F. in less than 3 minutes.

Chemical

C	Cr	Mn	Ni	N	P	Si	S
.013	18.2	1.5	8.07	.06	.033	.44	.013

Mechanical

TEST	UNITS	RESULTS
Tensile PSI	PSI	91500
Yield PSI	PSI	40400
Elong %		55

Hardness

RB81

TEST	RESULT
Flattening	Pass

This test report represents the actual attributes of the items furnished and all items were manufactured, sampled, inspected, and tested in full compliance with applicable specifications and your purchase order.
Certification is in accordance with EN10204:2004 type 3.1.
Chemical content is % by weight. Mechanical test results are in English units (inches and pounds).
No weld repairs have been performed on the base material.
Hardness in accordance with NACE MR0175 and MR0103 and material is free of cold work to enhance mechanical properties.
Pipe is Pickled and Passivated in accordance with ASTM A380.
Bristol Metals has a Quality Management System in place that is in compliance with ISO 9001:2000.
Bristol Metals does not add mercury during any manufacturing process.
NAFTA country of orgin: USA
Raw Material Melt Source USA
FAR BAA - Complies, DFARS BAA - Complies, FAR TAA - Complies

Rick Duncan

Rick Duncan - Quality Assurance Mgr

Date Printed 02/05/2010

This MTR contains 1 page (Page: 1)

502588

TCFB02590

Mill Test Report

EN 10204-3.1 / DIN 50049-3.1B

Commodity : STAINLESS STEEL PLATE CUT STRIP

Specification : ASTM A240/A480-01,ASME SA240/SA480-95
ASTM A276-01 Chem/Mech.only
ASTM A479-01/ASME SA479-95 Chem/Mech.only
ASTM A484-01 Chem/Mech.only
QQS-763-F Chem only

Customer : TA CHEN INTERNATIONAL, INC.

Shipper : TA CHEN STAINLESS PIPE CO., LTD.

Destination : LOS ANGELES

TA CHEN STAINLESS PIPE CO., LTD.
NO. 125 HSIN-TIEN 2ND ST.,
JENG-TEH, TAINAN, TAIWAN
TEL:(06)2793254 FAX:(06)2701382
COUNTRY ORIGIN:TAIWAN

Customer's PO# : L21603 **Certificate NO** : HG0256002

Factory O/N : QA02HA059 **Date** : 2007/10/11 **INVOICE NO** : QA02HG0256

Item No.	Case No. (Crate No.)	Heat No.	Supplier	Size	Quantity Pcs	Weight Kgs	C	Si	Mn	P	S	Ni	Cr	Mo	N
							Chemical Composition in %								
01	068,069,070,071	148763A	YUSCO	.187 X 1.250 X 144 316/316L		923	0.017	0.540	1.040	0.030	0.004	10.09	16.74	2.070	0.023
02	023,024,025,026	147462D	YUSCO	.250 X 4.000 X 144 316/316L		961	0.017	0.530	1.080	0.029	0.005	10.17	16.78	2.160	0.021
03	063	147462D	YUSCO	.250 X 6.000 X 144 316/316L		249	0.017	0.530	1.080	0.029	0.005	10.17	16.78	2.160	0.021
04	003,004,005,006,007,058,059,060	A2701669	TISCO	.500 X 6.000 X 144 316/316L		2311	0.021	0.441	1.257	0.030	0.002	10.26	16.88	2.007	0.039
				Total	0	4444									

Item No.	Tensile Test: 0.2%Yield Strength PSI	Tensile Strength PSI	Elongation %	Reduction of Area %	Hardness Test HRB	Bend Test	Heat Treatment TEMP. o F	Dimension And Surface Condition
01	44800	84200	52.00	62.00	78.00	OK	1960	OK
02	43600	85800	50.00	60.00	83.00	OK	1960	OK
03	43600	85800	50.00	60.00	83.00	OK	1960	OK
04	42000	84100	59.00	65.00	83.00	OK	1960	OK

Remarks

1. NO WELD REPAIR PERFOMED
2. FREE OF MERCURY CONTAMINATION
3. ASTM A262-01 PRAC. E OK
4. MECHANICAL PROPERTIES ARE MEASURED FROM SHEET COIL BEFORE CUTTING.
5. NACE MR0175-03

QC ACCEPTED
DATE 5-9-08
INTLS

We hereby certify the above statement to be true and correct every detail
TA CHEN has established a QMS according to ISO 9001, which is certified by LRQA (cert. no.TWN0936925)

George Yang

Manager of Inspection Section/George Yang

TA CHEN INTERNATIONAL CORPORATION
www.tachen.com

MILL TEST REPORT

MTR#: TCFB02590 Customer#: ESC900 PO#: 042S-6777435 SO#: LAA825
Item#: G6L00120116 Bundle#: HG0256-069 Heat#: 148763A

LAWRENCE BERKELEY NATIONAL LABORATORY

PRESSURE-TEST RECORD

Date: 8/17/10

Location of vessel (or system): Build. 70A Rm. 2263

LBL PRESSURE TESTED	
DWG. NO.	
SAFETY NOTE	
WORKING PRESS.	PSI
WORKING FLUID	
WORKING TEMP	°F
R E M A	
TEST NUMBER	
BY	D TE

Description: Xenon TPC Reclamation Subsystem (1 of 3 subsystems to test)

Pressure Vessel ☐ Pressure System ☒ (check box)

"Pressure-Tested" Label attached ☐

TEST INFORMATION:

1. Test pressure 1500 (MAWP) psig x 1.25 = Pa (1.875 kpsi)

2. Testing Fluid (oil, He, etc.) Ar gas

3. Test Temperature room temp °C (°F)

4. Design Temperature room temp °C (°F)

5. Safety Case

6. Responsible Designer Tom Miller Name:

7. Responsible User Helmuth Spieler Name:

Dept. D. Shuman 8/17/10

Divn: Russell Wells 8/17/10
Russell Wells

8. Diameter measurements (for pressure-vessel tests only)

Location (marked) Before testing After testing Difference (+ or)

Remarks:

Test by: T. Miller

M&O, Mach. Shop

CERTIFICATION:

The vessel identified above has been pressure tested and is approved for operation within these test conditions.

Certified by: Russell Wells 8/17/10

LAWRENCE BERKELEY NATIONAL LABORATORY

PRESSURE-TEST RECORD

Date: 8/25/2010

Location of vessel (or system): Build. 70A Rm. 2263

LBL PRESSURE TESTED	
DWG. NO.	
SAFETY NOTE	
WORKING PRESS.	PSI
WORKING FLUID	
WORKING TEMP.	°F
R E M A	
TEST NUMBER	
BY	D TE

Description: Xenon TPC Pressure Vessel and Gas System check (1.25x MAWP) subsections 2 + 3 (of 3)

Pressure Vessel ☑ Pressure System ☑ (check box)

"Pressure-Tested" Label attached ☐

TEST INFORMATION: 570/320

1. Test pressure ~~563~~ / ~~313~~ psig _____ Pa (_____ kpsi)

2. Testing Fluid (oil, He, etc.) Argon gas

3. Test Temperature _____ °C (74 °F)

4. Design Temperature room temp. °C (_____ °F)

5. Safety Case _____

6. Responsible Designer Tom Miller Name: _____

7. Responsible User Helmuth Spieler Name: _____

Dept. Derek Shuman

Divn: Ken Chow

8. Diameter measurements (for pressure-vessel tests only)

Location (marked) Before testing After testing Difference (+ or -)

Remarks: _____

Test by: _____

M&O, Mach. Shop

CERTIFICATION:

The vessel identified above has been pressure tested and is approved for operation within these test conditions.

Certified by: [signature] Aug. 25, 2010