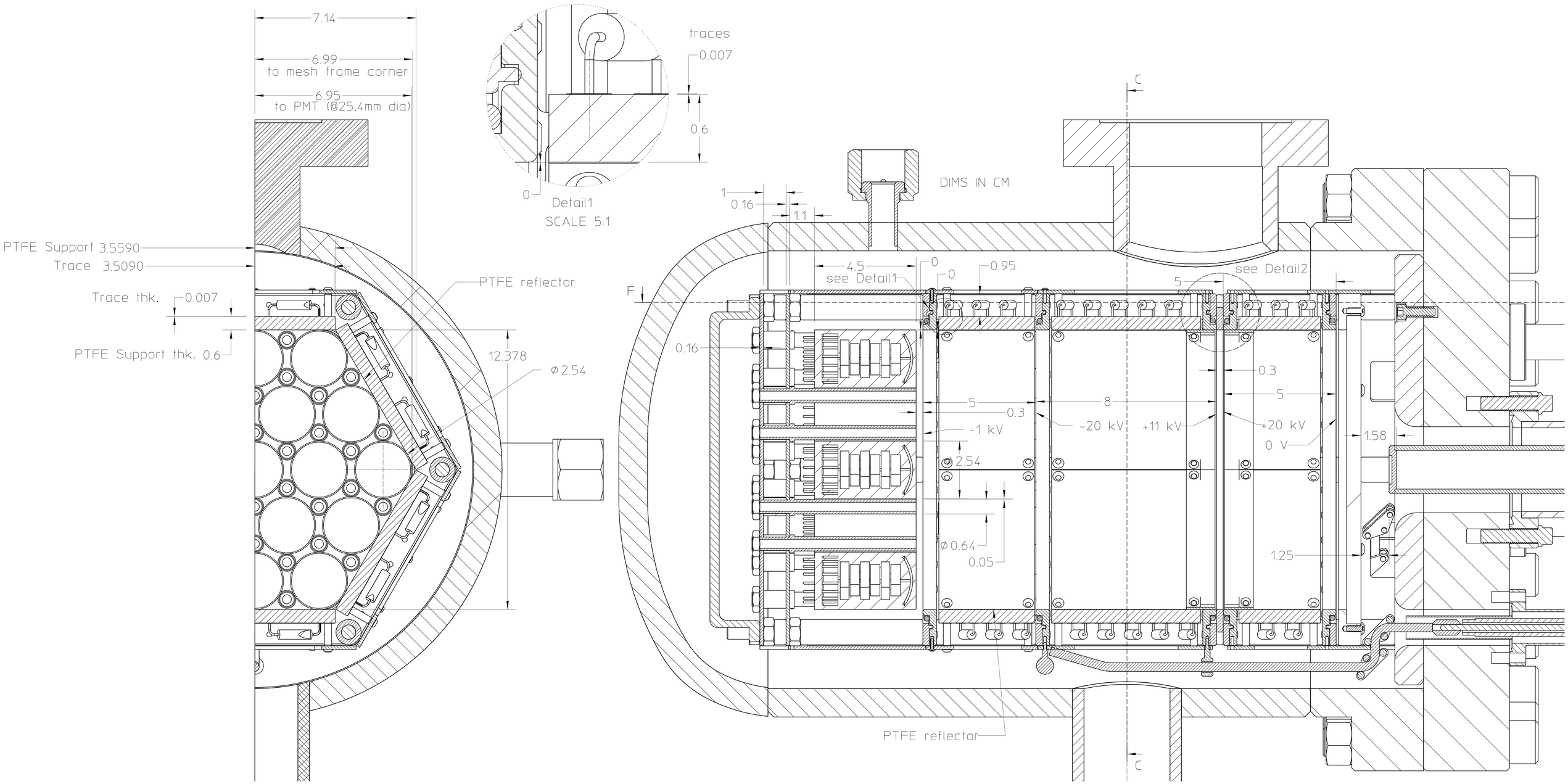
7.14
6.99
to mesh frame corner
6.95
to PMT (@25.4mm dia)
PTFE Support 3.5590
Trace 3.5090
Trace thk. 0.007
PTFE Support thk. 0.6
PTFE reflector
12.378
ϕ2.54
traces
0.007
0.6
0
Detail1
SCALE 5:1
DIMS IN CM
C
F
1
0.16
1.1
4.5
see Detail1
0
0
0.95
see Detail2
5
0.16
0.3
5
0.3
8
5
-1 kV
-20 kV
+11 kV
+20 kV
0 V
1.58
ϕ2.54
ϕ0.64
0.05
1.25
PTFE reflector
C