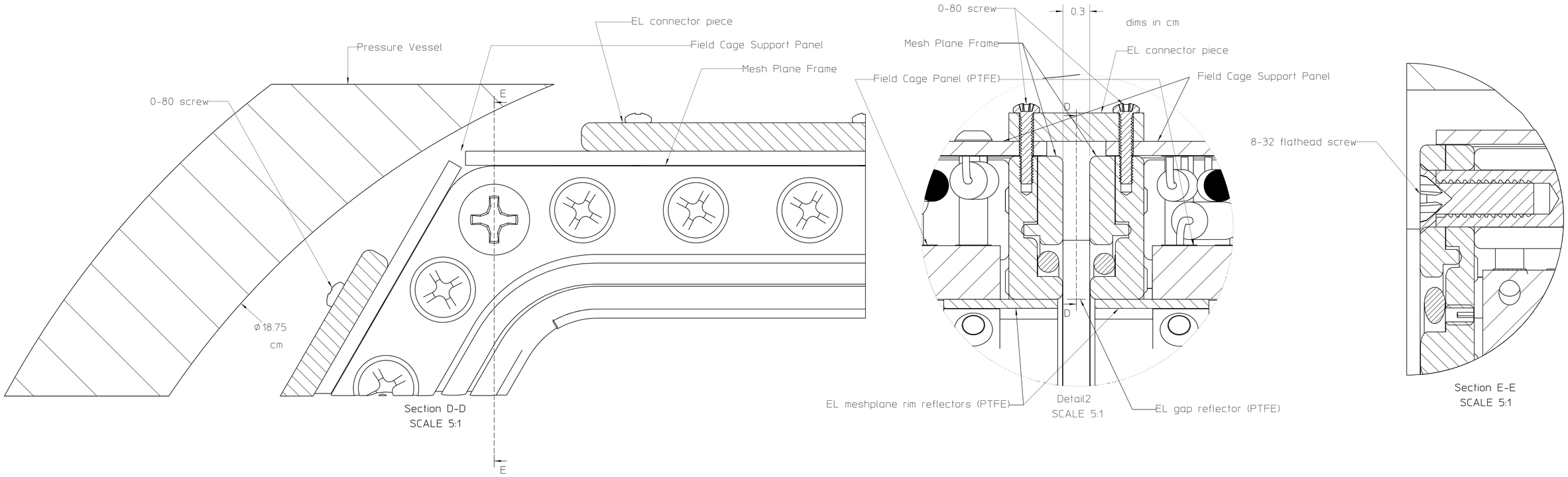
Pressure Vessel
0-80 screw
EL connector piece
Field Cage Support Panel
Mesh Plane Frame
E
ø 18.75
cm
Section D-D
SCALE 5:1
E
0-80 screw
0.3
dims in cm
Mesh Plane Frame
EL connector piece
Field Cage Panel (PTFE)
Field Cage Support Panel
D
D
EL meshplane rim reflectors (PTFE)
Detail2
SCALE 5:1
EL gap reflector (PTFE)
8-32 flathead screw
Section E-E
SCALE 5:1