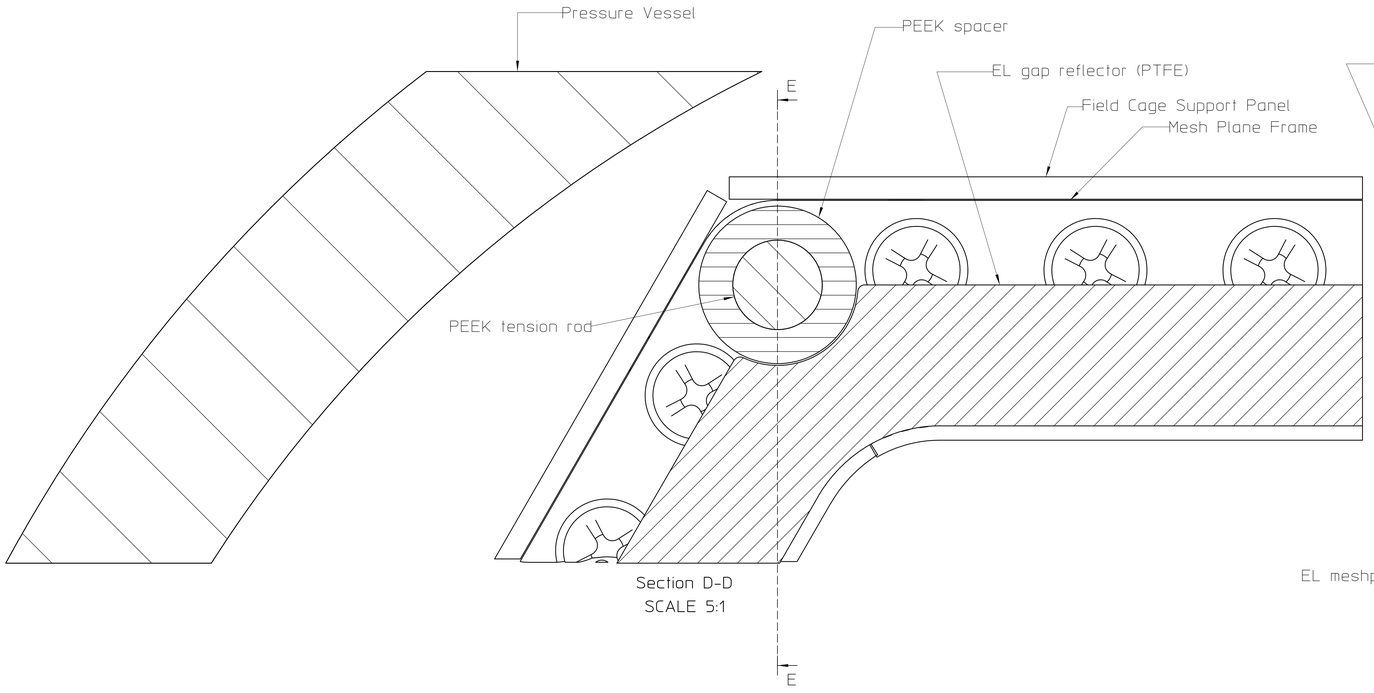

Section D-D
SCALE 5:1

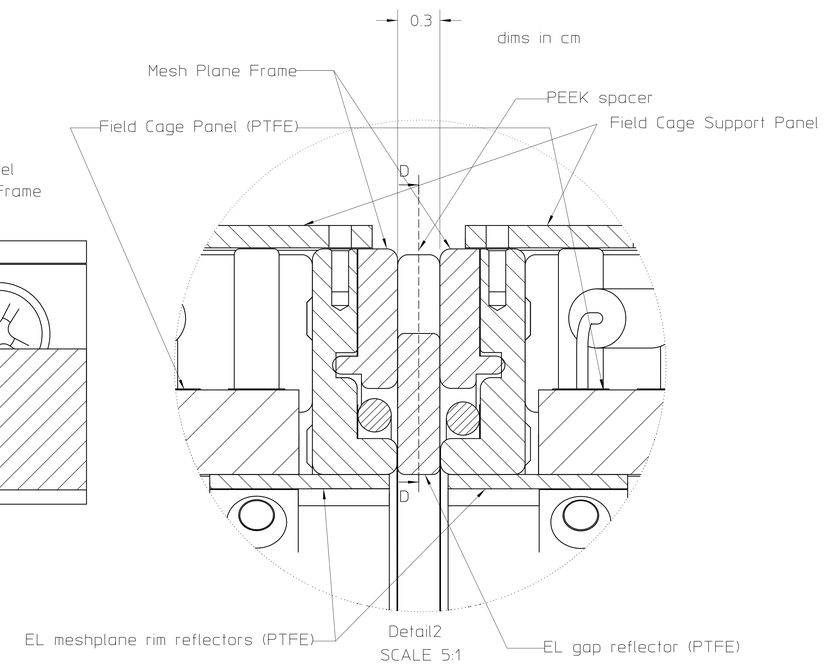

Detail2
SCALE 5:1

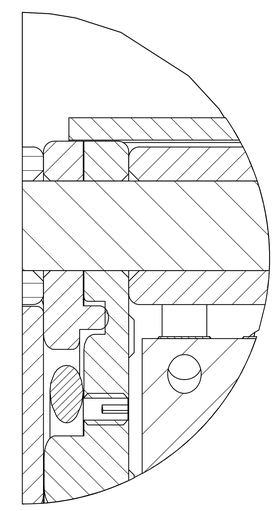

Section E-E
SCALE 5:1