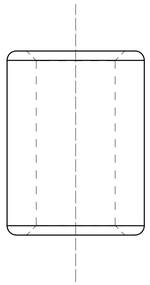

TOP1
SCALE 2:1

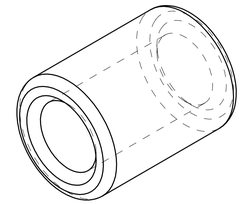

ISO1
SCALE 2:1

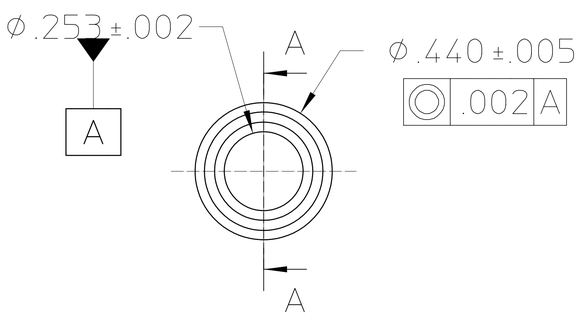

FRONT1
SCALE 2:1

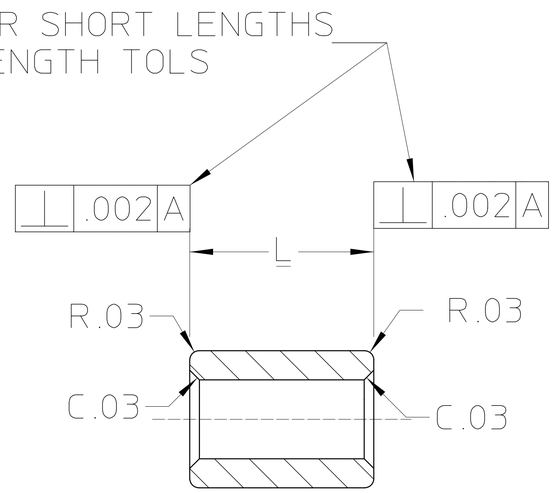

Section A-A
SCALE 2:1

__ EA. OF THE FOLLOWING LENGTHS

1. 0.5905 +/-.003
2. 1.4925 +/-.005
3. 0.1181 +/-.001
4. 2.6736 +/-.005
5. 1.7305 +/-.005
6. 2.1353 +/-.005
7. 0.2062 +/-.002
8. 0.0394 (NO RADII OR CHAM.) +/-.001

VER	AUTHOR	APPROVER	DATE	CHANGE DESCRIPTION
A	dbshuman			INITIAL VERSION (NO REVISION)

UNLESS OTHERWISE SPECIFIED
TOLERANCES
.X±.05 .XX±.01 .XXX±.005
FRACTIONS: ± 1/64
ANGLES: ± 0.2°
MACH. SURFS.: 125✓ OR BETTER
REF: ASME Y14.5M-1994, THREADS ARE CLASS 2
BREAK EDGES .016 MAX. ON MACHINED WORK
REMOVE BURRS, WELD SPLATTER & LOOSE SCALE

MAT 2: , NOTES:
MAT 1: ROD, PEEK, UNFILLED NOTES:

PROJECT NAME:
PROJECT NUMBER:
SHOWN ON:
DO NOT SCALE PRINT
SCALE: 1 : 1
CATEGORY CODE: RP3040
THIRD ANGLE PROJECTION

ERNEST ORLANDO LAWRENCE
BERKELEY NATIONAL LABORATORY
UNIVERSITY OF CALIFORNIA

HIGH PRESSURE XENON TIME PROJECTION CHAMBER
TPC INTERNALS
COMPRESSION SPACER

SHEET 1 OF 1 | SIZE: B | DWG NO: 26K520 | VER A