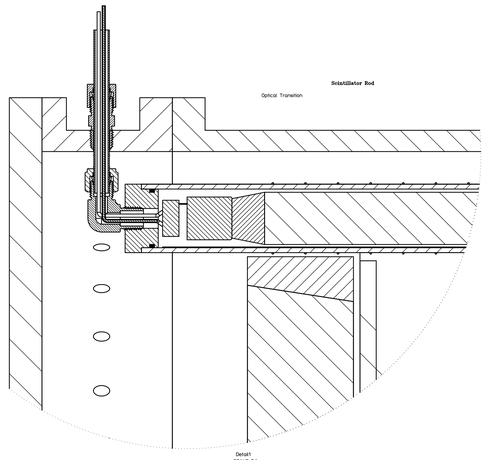

Detail1
SCALE 2:1

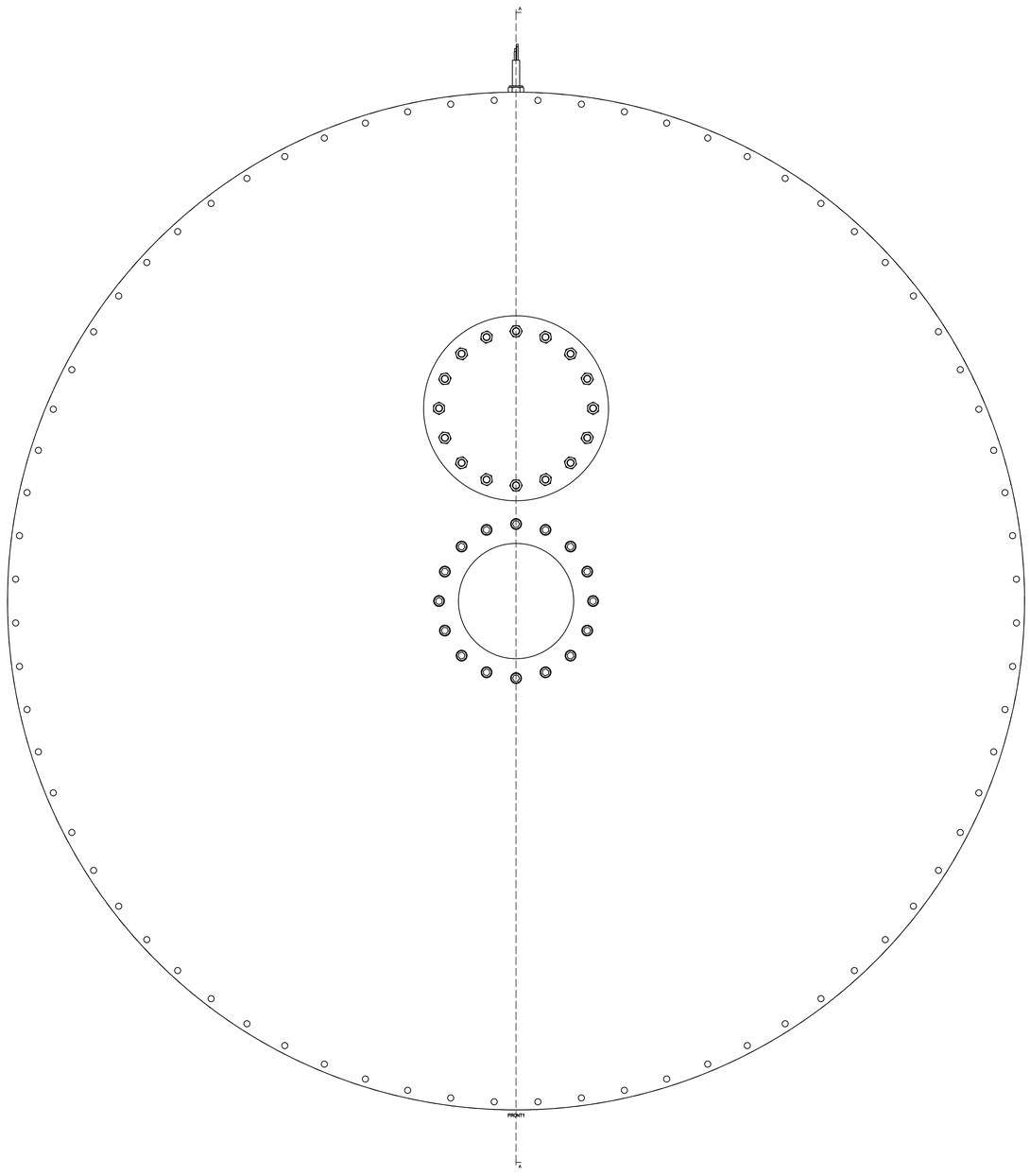

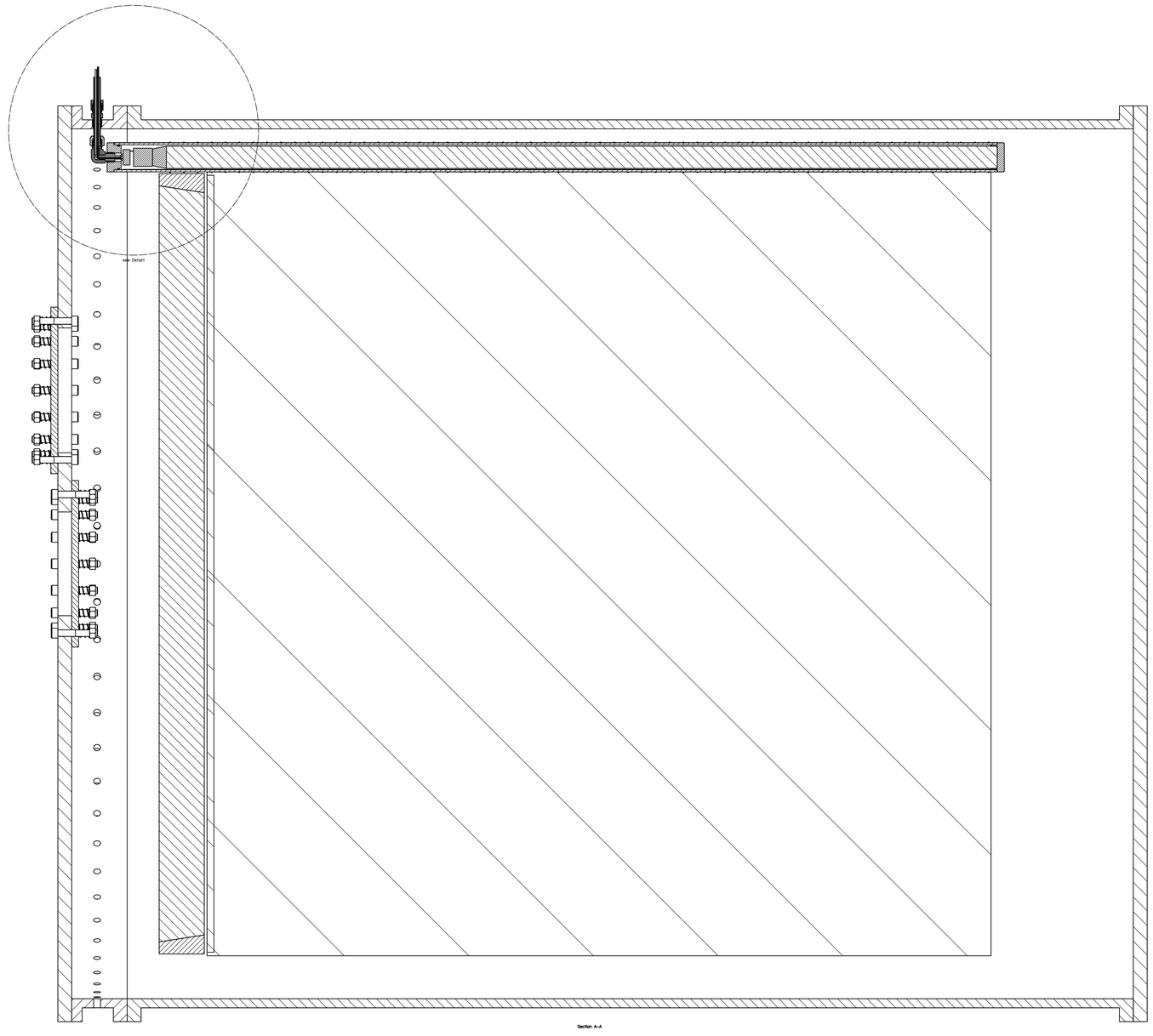

Section A-A