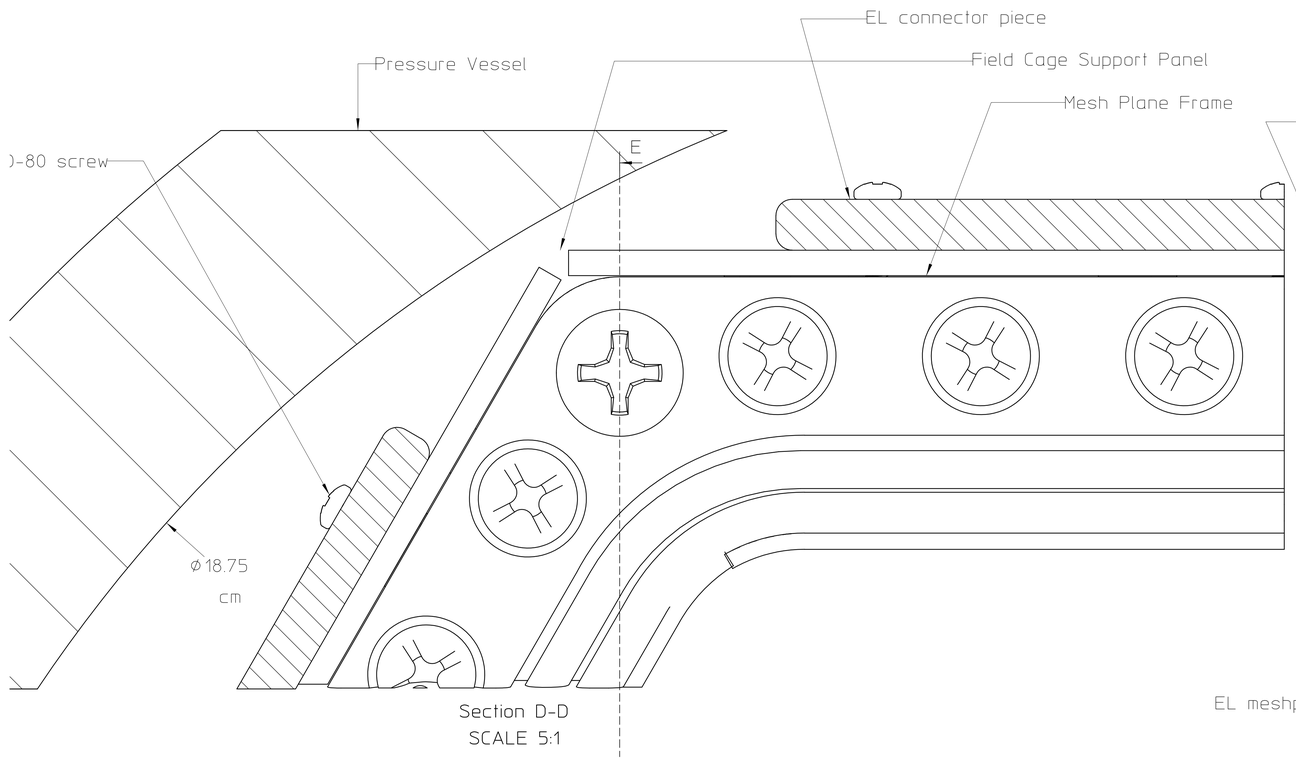


Section D-D
SCALE 5:1

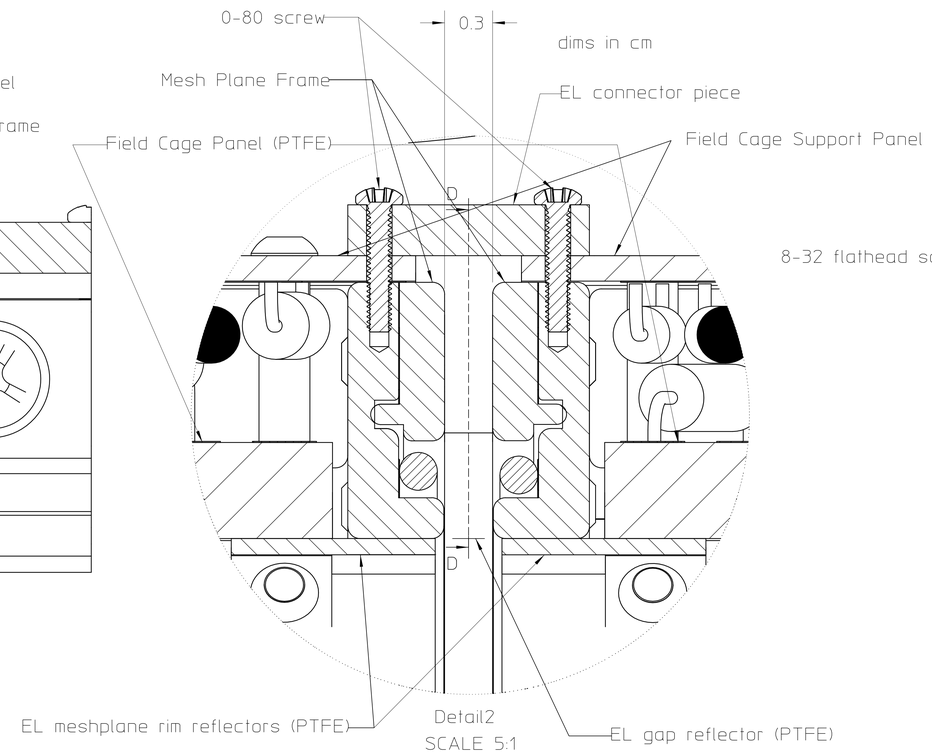


Detail2
SCALE 5:1

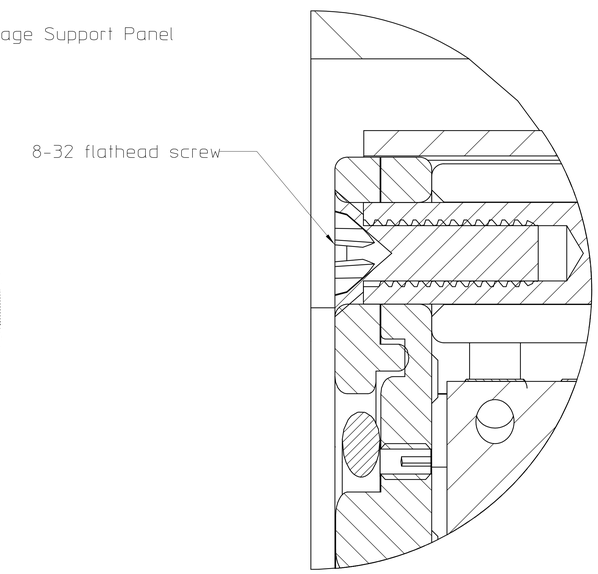


Section E-E
SCALE 5:1