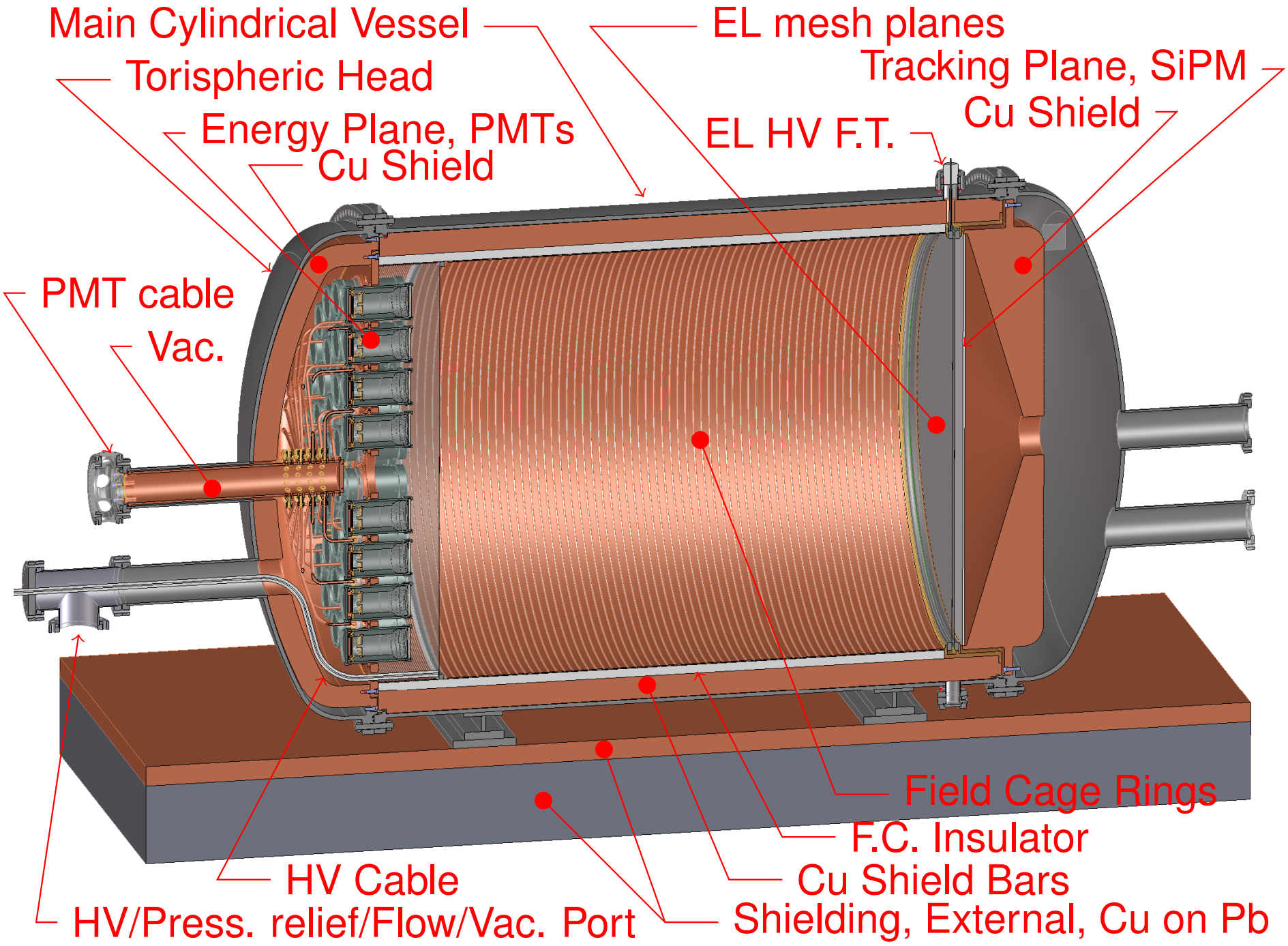
Main Cylindrical Vessel
EL mesh planes
Torispheric Head
Tracking Plane, SiPM
Energy Plane, PMTs
Cu Shield
EL HV F.T.
Cu Shield
PMT cable
Vac.
Field Cage Rings
F.C. Insulator
HV Cable
Cu Shield Bars
HV/Press. relief/Flow/Vac. Port
Shielding, External, Cu on Pb