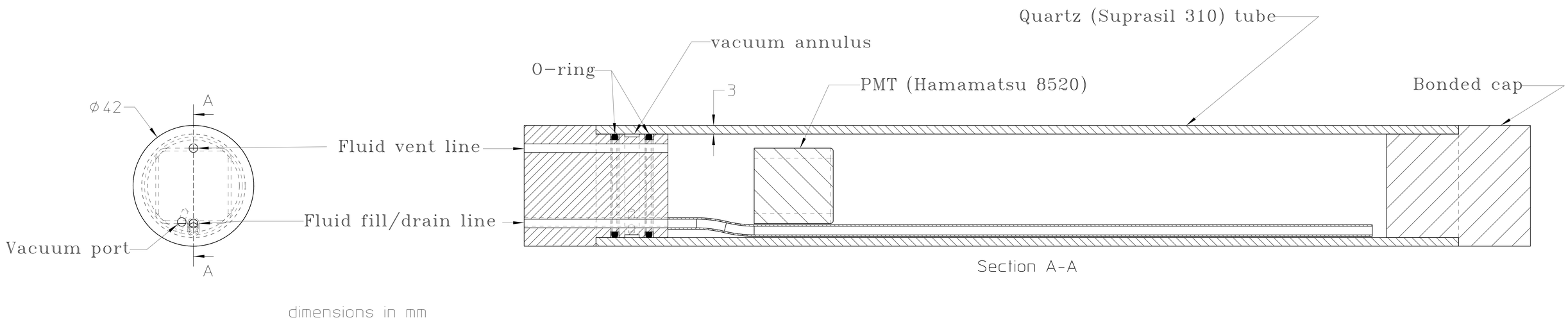
Quartz (Suprasil 310) tube
vacuum annulus
O-ring
3
PMT (Hamamatsu 8520)
Bonded cap
ϕ42
A
Fluid vent line
Fluid fill/drain line
Vacuum port
A
Section A-A
dimensions in mm