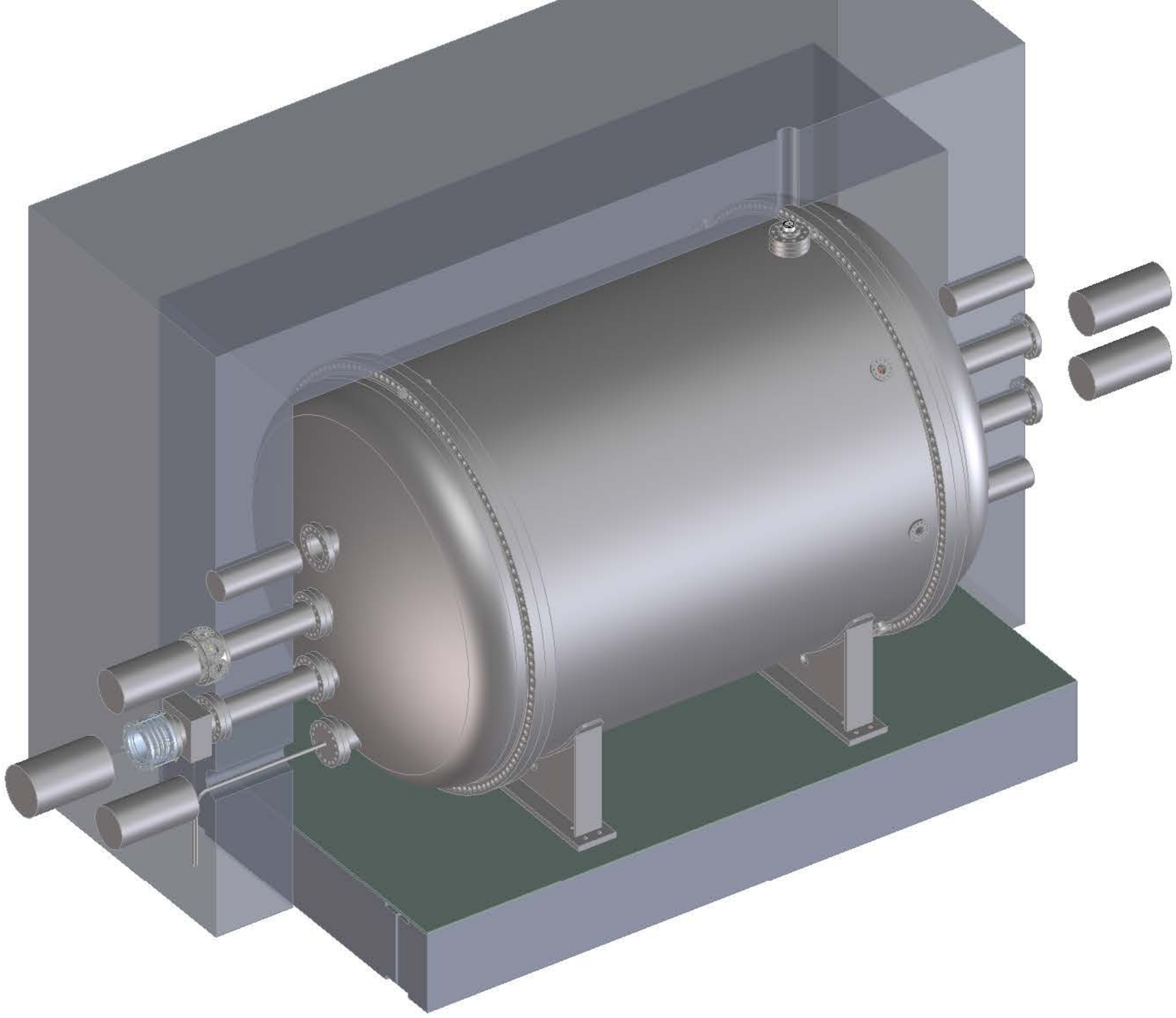

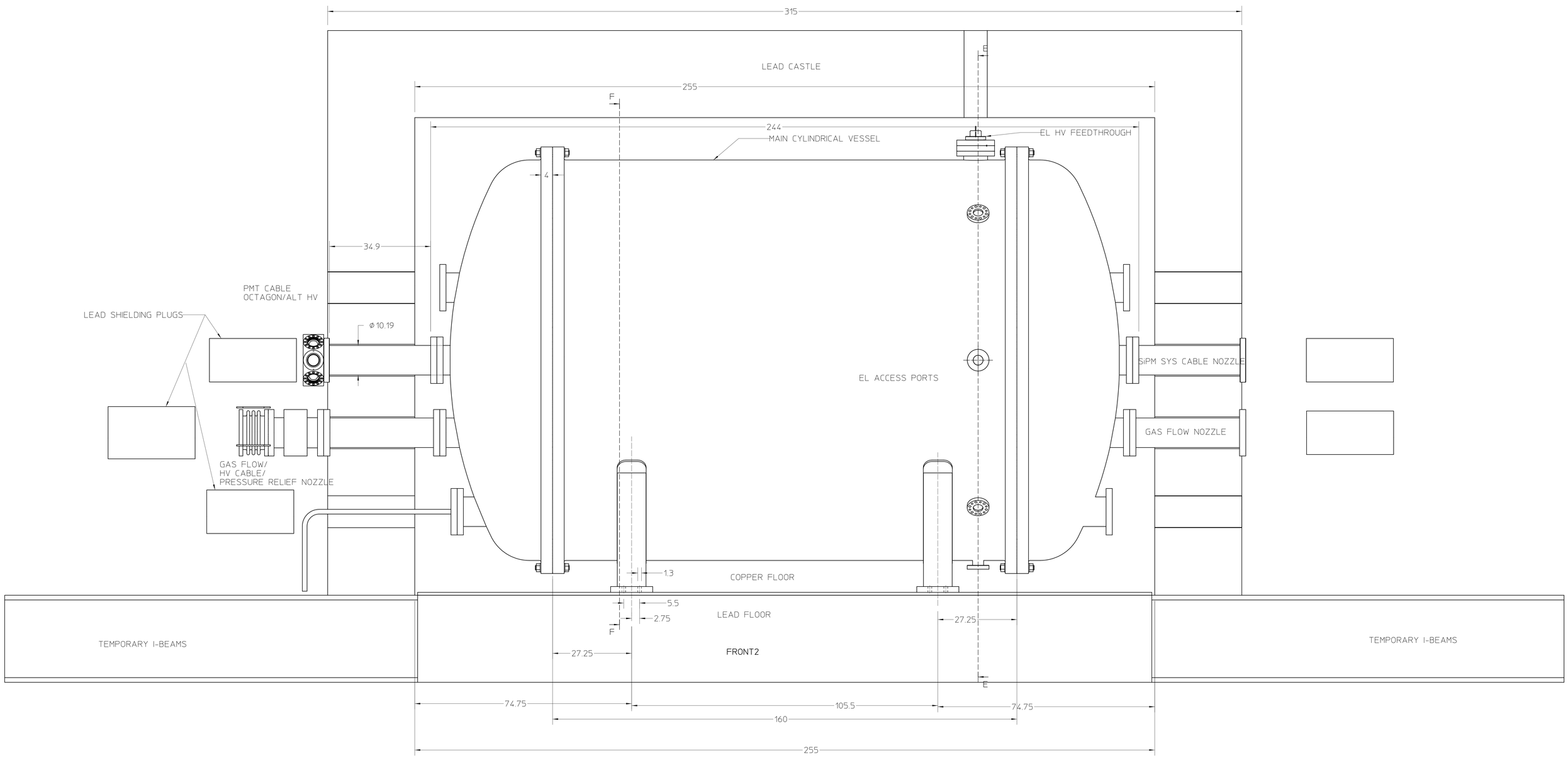
315
LEAD CASTLE
255
244
MAIN CYLINDRICAL VESSEL
EL HV FEEDTHROUGH
4
34.9
PMT CABLE
OCTAGON/ALT HV
LEAD SHIELDING PLUGS
Ø 10.19
EL ACCESS PORTS
SiPM SYS CABLE NOZZLE
GAS FLOW NOZZLE
GAS FLOW/
HV CABLE/
PRESSURE RELIEF NOZZLE
1.3
COPPER FLOOR
5.5
2.75
LEAD FLOOR
27.25
TEMPORARY I-BEAMS
FRONT2
TEMPORARY I-BEAMS
74.75
105.5
74.75
160
255

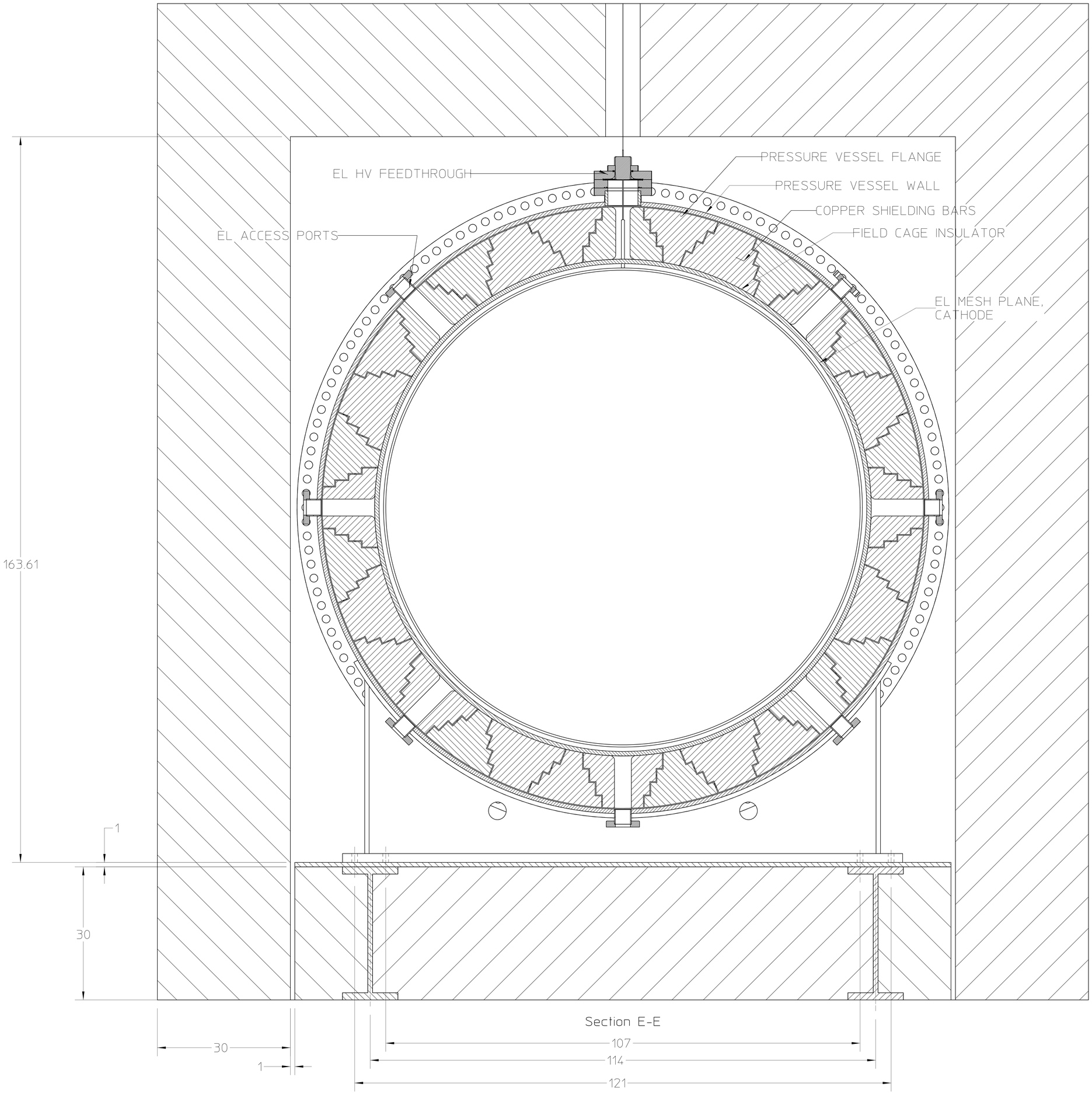
EL HV FEEDTHROUGH
PRESSURE VESSEL FLANGE
PRESSURE VESSEL WALL
COPPER SHIELDING BARS
FIELD CAGE INSULATOR
EL ACCESS PORTS
EL MESH PLANE,
CATHODE
163.61
1
30
Section E-E
30
1
107
114
121