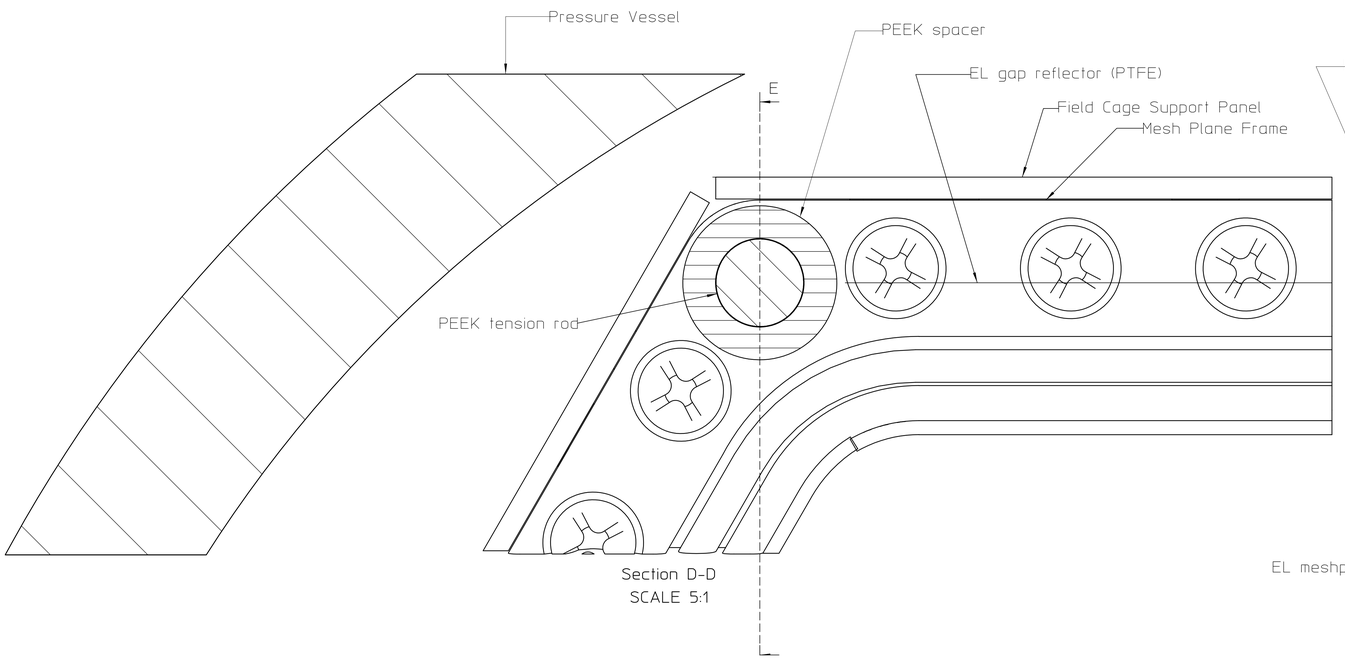
Pressure Vessel
PEEK spacer
EL gap reflector (PTFE)
Field Cage Support Panel
Mesh Plane Frame
E
PEEK tension rod
Section D-D
SCALE 5:1

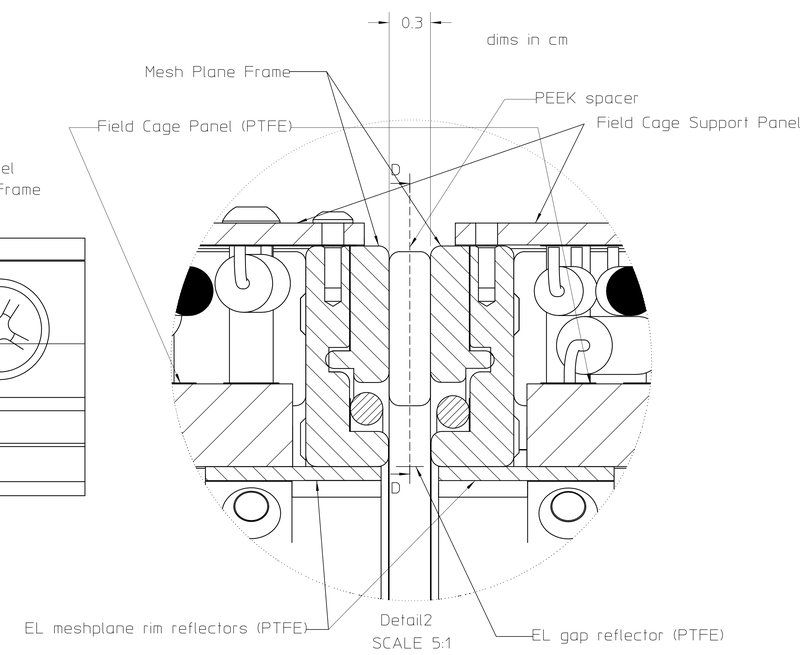
0.3
dims in cm
Mesh Plane Frame
PEEK spacer
Field Cage Panel (PTFE)
Field Cage Support Panel
D
D
EL meshplane rim reflectors (PTFE)
Detail2
SCALE 5:1
EL gap reflector (PTFE)

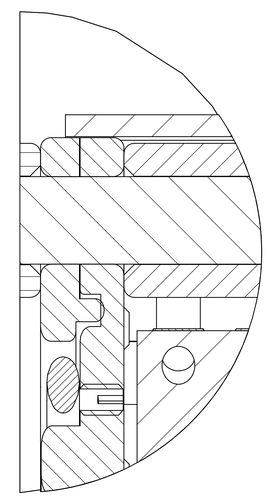
Section E-E
SCALE 5:1