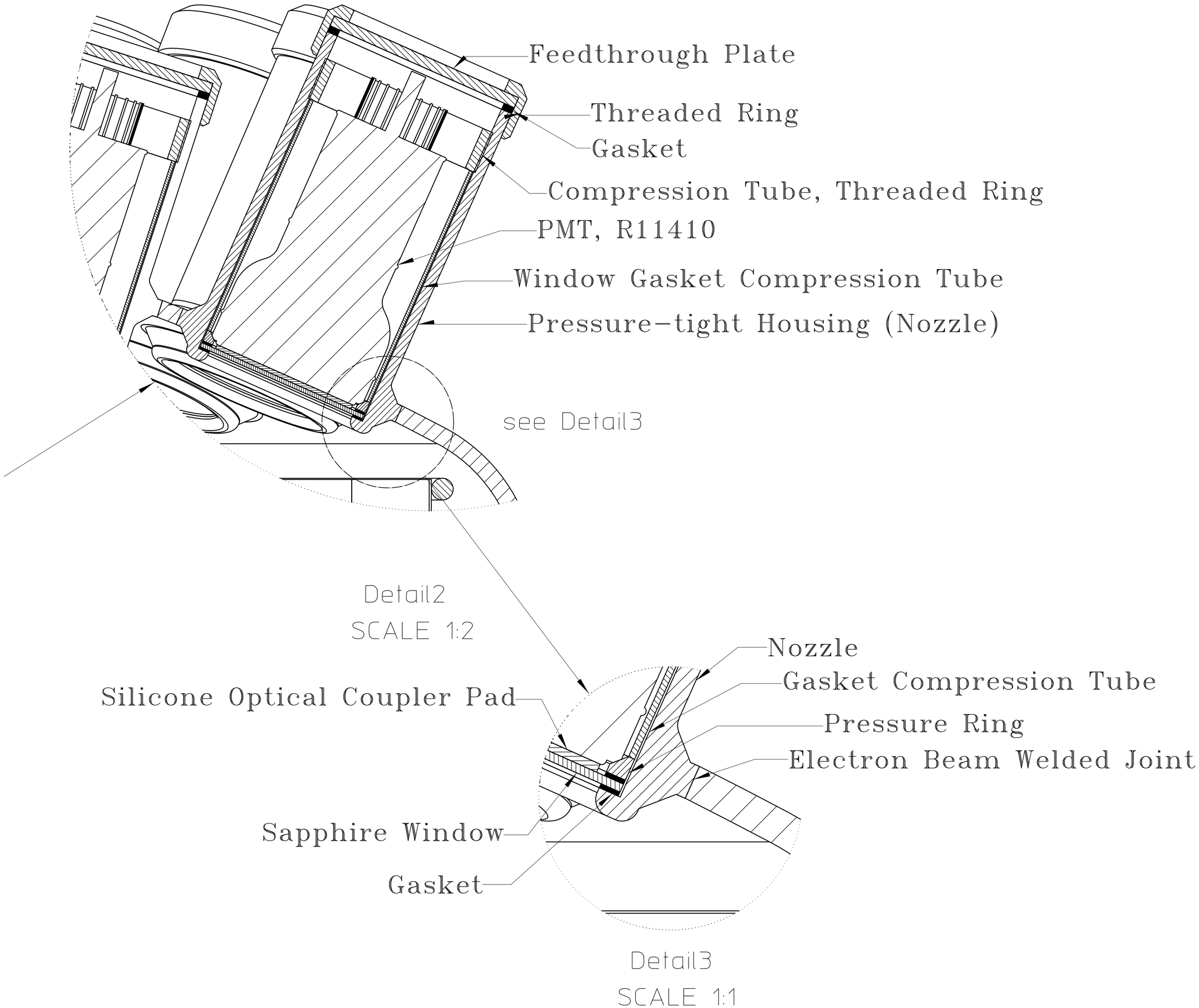
Feedthrough Plate
Threaded Ring
Gasket
Compression Tube, Threaded Ring
PMT, R11410
Window Gasket Compression Tube
Pressure-tight Housing (Nozzle)
see Detail3
Detail2
SCALE 1:2
Nozzle
Gasket Compression Tube
Silicone Optical Coupler Pad
Pressure Ring
Electron Beam Welded Joint
Sapphire Window
Gasket
Detail3
SCALE 1:1