STANDARD BOLTS

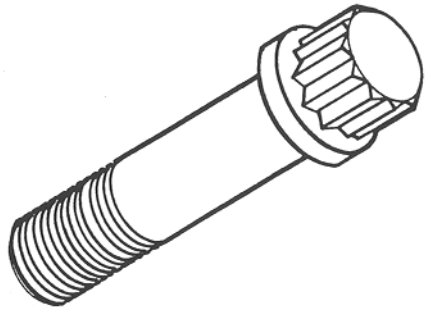

high strength • utmost reliability • high performance

Voi-Shan's metallurgical and manufacturing skills are applied to producing high strength bolts that more than measure up to difficult aerospace environments. This talent serves to match the kind of structural materials used on present-day airframes and engines with fasteners of absolute reliability and superior strength.

The inherent qualities of titanium, Inconel and H-11 alloy steel, as well as exotic materials, suit an extremely broad product range. Depending on choice, considerable weight savings, superior corresion-resistance and high strength-to-weight ratios may be gained. Overall, there are tangible possibilities of economic advantages through the practicality of extra payloads being carried over longer distances at greater speeds. Designers are able to reduce weight without sacrifice to the main structure and strength level requirements.

Full-scale technical expertise in this demanding field is an example of Voi-Shan's noted contribution to the state of the art.

STANDARD BOLTS

TECHNICAL INFORMATION

MATERIAL SELECTION

Alloy Steels, A-286, Inconel 718, Waspaloy, Rene 41, Titanium Alloys and super alloys.

PLATING AND FINISHES

Various Cadmium plating and Silver plating per specifications QQ-P-416, NAS672 MIL-C-8837, AMS 2410, AMS 2411, AMS 2416, PH13-8MO, and detailed types. Also, aluminum coatings and hard facing.

DIAMETERS

#8 thru 1-1/2"
4MM thru 24 MM

TEMPERATURE RANGE

-423ºF thru 1400ºF. (3000º + for Tantalum).

LUBRICATION

Various dry film lubricants per MIL-L-8937 and MIL-L-46010. Also lubricants to customer specification.

Additional technical information, standards pages, and tooling data are available from the Voi-Shan sales service staff.

Fairchild Fasteners

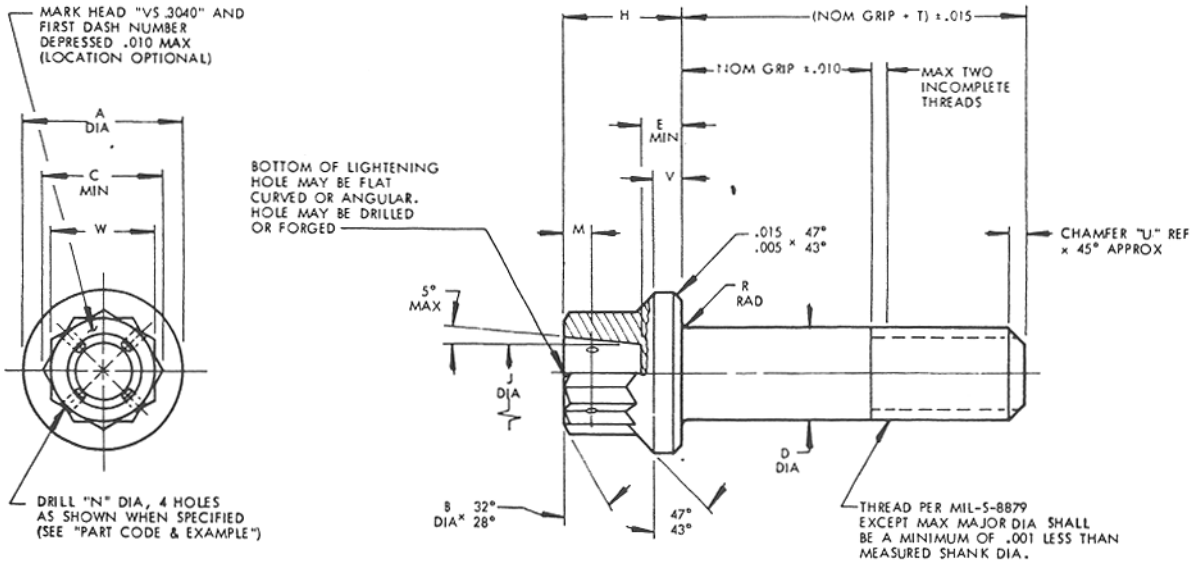

FIRST DASH NO.	THREAD	A DIA	B DIA	C MIN	D DIA		E MIN		H	J DIA		M	N DIA		R RAD		T	U REF	V	W	X TIR ⚠1	Y TIR ⚠1	Z TIR ⚠1		
-3	.1900-32UNJF-3A	.350 .340	.250 .235	.277	.1895 .1885		.092		.285 .265	.135 .095		.072 .052	.042 .032		.041 .031		.408	.039	.074 .054	.251 .243	.005	.004	.0045		
-4	.2500-28UNJF-3A	.438 .428	.312 .297	.349	.2495 .2485		.135		.310 .290	.190 .160		.072 .052	.042 .032		.041 .031		.487	.045	.079 .059	.315 .306	.005	.004	.0045		
-5	.3125-24UNJF-3A	.531 .521	.375 .360	.419	.3120 .3110		.162		.358 .338	.225 .185		.080 .060	.060 .050		.041 .031		.587	.052	.092 .072	.377 .368	.006	.005	.0045		
-6	.3750-24UNJF-3A	.649 .639	.437 .422	.490	.3745 .3735		.197		.398 .378	.270 .230		.080 .060	.060 .050		.057 .047		.657	.052	.101 .081	.439 .430	.008	.006	.0045		
-7	.4375-20UNJF-3A	.750 .740	.500 .485	.563	.4370 .4360		.228		.445 .425	.330 .290		.080 .060	.060 .050		.057 .047		.758	.063	.109 .089	.503 .494	.009	.008	.0060		
-8	.5000-20UNJF-3A	.828 .818	.562 .547	.633	.4995 .4985		.254		.514 .494	.390 .350		.104 .084	.060 .050		.057 .047		.838	.063	.133 .113	.565 .556	.010	.008	.0060		
-9	.5625-18UNJF-3A	.938 .928	.625 .610	.705	.5615 .5605		.287		.567 .547	.450 .410		.104 .084	.060 .050		.057 .047		.941	.069	.143 .123	.628 .619	.011	.009	.0060		
-10	.6250-18UNJF-3A	1.050 1.040	.687 .672	.777	.6240 .6230		.327		.628 .608	.510 .470		.104 .084	.060 .050		.073 .063		1.001	.069	.160 .140	.691 .682	.012	.010	.0060		
-12	.7500-16UNJF-3A	1.230 1.220	.812 .797	.920	.7490 .7480		.380		.721 .701	.580 .540		.104 .084	.060 .050		.073 .063		1.191	.078	.188 .168	.817 .808	.015	.012	.0060		

PROCUREMENT SPEC: VSM 1660.

MATERIAL: A-286 CRES PER AMS 5735.

HEAT TREAT: 200,00 PSI MIN ULTIMATE TENSILE STRENGTH

FINISH CODE: CODE LETTER "C" AFTER SECOND DASH NUMBER DESIGNATES CADMIUM PLATE PER QQ-P-416, TYPE II, CLASS 2.
NO CODE LETTER AFTER SECOND DASH NUMBER DESIGNATES PASSIVATE PER MIL-S-5002.

PART CODE & EXAMPLE: VS 3040 -4 H 8 C

- C — FINISH (SEE "FINISH CODE")
- 8 — NOMINAL GRIP LENGTH IN 16THS
- H — DASH (-) = UNDRILLED HEAD; CODE LETTER "H" = DRILLED HEAD
- -4 — NOMINAL DIAMETER IN 16THS
- VS 3040 — BASIC PART NUMBER

GENERAL NOTES:

⚠1 CONCENTRICITY: "A" DIA, "D" DIA, AND "J" DIA SHALL BE CONCENTRIC WITHIN "X" TIR.
"J" DIA AND "W" DIMENSION SHALL BE CONCENTRIC WITHIN "Y" TIR.
"D" DIA SHALL BE CONCENTRIC TO THREAD PITCH DIA WITHIN "Z" TIR.

2. SURFACE ROUGHNESS PER ANSI 846.1. BEARING SURFACE OF HEAD, HEAD TO SHANK FILLET RADIUS, SHANK AND ALL THREAD ELEMENTS 32 MAX RHR; ALL OTHER SURFACES 125 MAX RHR.
3. BREAK ALL SHARP EDGES AND REMOVE ALL BURRS.
4. DIMENSIONS IN INCHES, TO BE MET AFTER PLATING, IF APPLICABLE.

CODE IDENT. NO. 92215

APPROVED DATE 27 APRIL 1971

REV. LETTER AND DATE B 1 MAY 1975

TITLE
BOLT, 12 POINT EXTERNAL WRENCHING,
A-286 CRES
200,00 PSI MIN TENSILE

STANDARD

VS 3040

SHEET 1 OF 1.

VSE601-34B

THIS DRAWING IS THE PROPERTY OF VSI CORPORATION. IT IS ISSUED FOR A PARTICULAR LIMITED PURPOSE. IT CONTAINS INFORMATION PROPRIETARY TO VSI CORPORATION. WHEN THE PURPOSE FOR WHICH IT HAS BEEN ISSUED HAS BEEN FULFILLED, THIS DRAWING SHOULD BE RETURNED TO VSI CORPORATION OR DESTROYED. AND ALL RIGHTS OF REPRODUCTION ARE RESERVED BY VSI CORPORATION.

Fairchild Fasteners

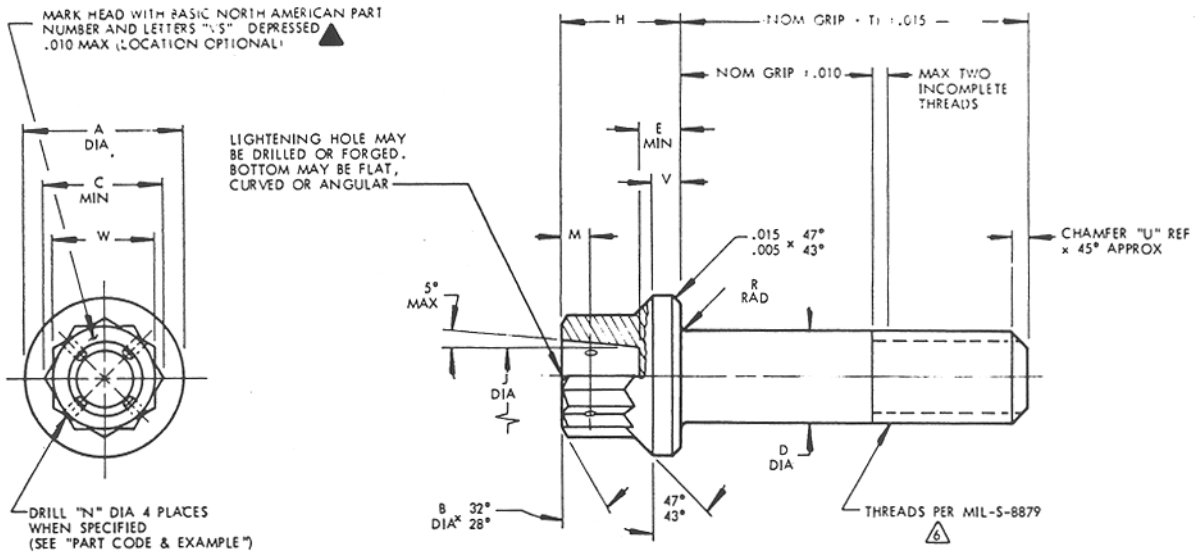

FIRST DASH NO. STANDARD	OVERSIZE FOR REPAIR ONLY 1/64 O.S.	OVERSIZE FOR REPAIR ONLY 1/32 O.S.	THREAD	A DIA	B DIA	C MIN	D DIA MIN	D DIA MAX	E MIN	H	J DIA	M	N DIA	R RAD (6)	T	U REF	V	W	X TIR (1)	Y TIR (1)	Z TIR (1)
-3			.1900-32 UNJF-3A	.350 .340	.250 .235	.277	.1890	.1895	.092	.206 .186	.135 .095	.042 .032	.042 .032	.041 .031	.390	.040	.074 .054	.251 .243	.005	.004	.0045
	-3( )X						.2021	.2026													
		-3( )Y					.2177	.2182													
-4			.2500-28 UNJF-3A	.438 .428	.312 .297	.347	.2490	.2495	.135	.244 .224	.190 .150	.042 .032	.042 .032	.041 .031	.500	.040	.079 .059	.313 .304	.005	.004	.0045
	-4( )X						.2646	.2651													
		-4( )Y					.2802	.2807													
-5			.3125-24 UNJF-3A	.531 .521	.375 .360	.419	.3115	.3120	.162	.286 .266	.225 .185	.075 .065	.060 .050	.041 .031	.593	.050	.092 .072	.376 .367	.006	.005	.0045
	-5( )X						.3271	.3276													
		-5( )Y					.3427	.3432													
-6			.3750-24 UNJF-3A	.649 .639	.437 .422	.491	.3740	.3745	.197	.332 .312	.270 .230	.075 .065	.060 .050	.057 .047	.643	.050	.101 .081	.439 .430	.006	.006	.0045
	-6( )X						.3896	.3901													
		-6( )Y					.4052	.4057													
-7			.4375-20 UNJF-3A	.750 .740	.500 .485	..561	.4365	.4370	.228	.365 .345	.330 .290	.075 .065	.060 .050	.057 .047	.733	.060	.109 .089	.502 .492	.009	.008	.0060
	-7( )X						.4521	.4526													
		-7( )Y					.4677	.4682													
-8			.5000-20 UNJF-3A	.828 .818	.562 .547	.631	.4990	.4995	.254	.411 .391	.390 .350	.075 .065	.060 .050	.057 .047	.813	.060	.133 .113	.564 .553	.010	.008	.0060
	-8( )X						.5146	.5151													
		-8( )Y					.5302	.5307													
-9			.5625-18 UNJF-3A	.938 .928	.625 .610	.703	.5610	.5615	.287	.454 .434	.450 .410	.075 .065	.060 .050	.057 .047	.910	.070	.143 .123	.627 .616	.011	.009	.0060
	-9( )X						.5766	.5771													
		-9( )Y					.5922	.5927													
-10			.6250-18 UNJF-3A	1.050 1.040	.687 .672	.775	.6235	.6240	327	.504 .484	.510 .470	.099 .089	.060 .050	.073 .063	.970	.070	.160 .140	.690 .679	.012	.010	.0060
	-10( )X						.6391	.6396													
		-10( )Y					.6547	.6552													
-12			.7500-16 UNJF-3A	1.230 1.220	.812 .797	.917	.7485	.7490	.380	.576 .556	.580 .450	.099 .089	.060 .050	.080 .070	1.151	.080	.188 .168	.814 .803	.015	.012	.0060
	-12( )X						.7641	.7646													
		-12( )Y					.7797	.7802													
-14			.8750-14 UNJF-3A	1.410 1.400	.937 .922	1.059	.8735	.8740	.438	.643 .623	.660 .620	.099 .089	.060 .050	.093 .083	1.337	.090	.222 .202	.940 .928	.018	.014	.0090
	-14( )X						.8891	.8896													
		-14( )Y					.9047	.9052													
-16			1.000-12 UNJF-3A	1.590 1.580	1.062 1.047	1.200	.9985	.9990	.493	.722 .702	.750 .710	.130 .120	.060 .050	.105 .095	1.523	.100	.250 .230	1.064 1.052	.020	.016	.0090
	-16( )X						1.0141	1.0146													
		-16( )Y					1.0292	1.0302													
-18			1.125-12 UNJF-3A	1.775 1.765	1.250 1.235	1.414	1.1230	1.1240	.556	.805 .785	.850 .810	.130 .120	.060 .050	.118 .108	1.683	.100	.318 .298	1.252 1.239	.022	.019	.0090
	-18( )X						1.1386	1.1396													
		-18( )Y					1.1542	1.1552													
-20			1.250-12 UNJF-3A	1.984 1.974	1.312 1.297	1.484	1.2480	1.2490	.636	.916 .896	.960 .920	.130 .120	.060 .050	.130 .120	1.823	.100	.350 .330	1.314 1.301	.025	.021	.0090
	-20( )X						1.2631	1.2646													
		-20( )Y					1.2792	1.2802													
-22			1.375-12 UNJF-3A	2.169 2.159	1.437 1.422	1.628	1.3730	1.3740	.698	.972 .952	1.080 1.040	.130 .120	.060 .050	.143 .133	1.983	.100	.356 .336	1.440 1.427	.028	.023	.0120
	-22( )X						1.3886	1.3896													
		-22( )Y					1.4042	1.4052													
-24			1.500-12 UNJF-3A	2.355 2.345	1.625 1.610	1.842	1.4975	1.4990	.750	1.050 1.030	1.210 1.170	.130 .120	.060 .050	.155 .145	2.133	.100	.418 .398	1.627 1.614	.030	.023	.0120
	-24( )X						1.5131	1.5146													
		-24( )Y					1.5282	1.5302													

THIS DRAWING IS THE PROPERTY OF VSI CORPORATION. IT IS ISSUED FOR A PARTICULAR LIMITED PURPOSE. IT CONTAINS INFORMATION PROPRIETARY TO VSI CORPORATION. WHEN THE PURPOSE FOR WHICH IT HAS BEEN ISSUED HAS BEEN FULFILLED, THIS DRAWING SHOULD BE RETURNED TO VSI CORPORATION OR DESTROYED. AND ALL RIGHTS OF REPRODUCTION ARE RESERVED BY VSI CORPORATION.

CODE IDENT. NO.
92215

APPROVED DATE
9 JULY 1971

REV. LETTER AND DATE
E
20 MAY 1983

TITLE
BOLT, DOUBLE HEX HEAD
PH 13-8Mo CRES
220 KSI TENSILE

STANDARD
VS 3046
SHEET 1 OF 2.

VSE601-34B

Fairchild Fasteners

PROCUREMENT SPEC: NORTH AMERICAN ROCKWELL ST0160LB0009, TYPE I

MATERIAL: PH13-8Mo CRES PER AMS 5629.

HEAT TREAT: 220,000 PSI MINIMUM TENSILE. SEE PROCUREMENT SPEC.

FINISH CODE: "A" CODE - PASSIVATE PER QQ-P-35

PART CODE: VS 3046 A -4 H 12 X

- X — NO CODE = STANDARD SHANK (D) DIA; "X" CODE = 1/64 OVERSIZE SHANK (D) DIA; "Y" CODE = 1/32 OVERSIZE SHANK (D) DIA
- 12 — NOMINAL GRIP LENGTH IN 16THS
- H — DASH (-) = UNDRILLED HEAD; LETTER "H" = DRILLED HEAD
- -4 — NOMINAL DIAMETER IN 16THS
- A — FINISH (SEE "FINISH CODE")
- VS 3046 — BASIC PART NUMBER

GENERAL NOTES:

1. CONCENTRICITY: "A" DIA, "D" DIA, AND "J" DIA WITHIN "X" TIR.
"J" DIA AND "W" DIMENSION WITHIN "Y" TIR.
"D" DIA TO THREAD PITCH DIAMETER WITHIN "Z" TIR.

2. ~~CROSS DRILL OF HEAD NOT RECOMMENDED ON .190 AND .250 DIAMETERS.~~

3. BEARING SURFACE OF HEAD SHALL BE SQUARE TO SHANK WITHIN +30'/-0º.

4. SHANK SHALL BE STRAIGHT WITHIN .003 TIR PER INCH OF BOLT LENGTH

5. DIMENSIONS IN INCHES.

6. THREADS AND HEAD TO SHANK FILLET RADIUS TO BE ROLLED AFTER HEAT TREAT.

7. SURFACE ROUGHNESS PER ANSI 846.1. BEARING SURFACE OF HEAD, HEAD TO SHANK FILLET, SHANK AND ALL THREAD ELEMENTS 32 MAX RHR. ALL OTHER SURFACES 125 MAX RHR.

8. FLOURESCENT PENETRANT INSPECT PER MIL-I-6866, 100%.

CROSS REFERENCE		▲ HEAD MARKING
ROCKWELL INTERNATIONAL	VOI-SHAN	
LD111-0020-( )( )( )( )	VS3046-( )H( )	LD111-0020 VS
LD111-0021-( )( )( )( )	VS3046-( )-( )	LD111-0021 VS
LD111-0022-( )( )( )( )	VS3046-( )H( )X	LD111-0022 VS
LD111-0023-( )( )( )( )	VS3046-( )-( )X	LD111-0023 VS
LD111-0024( )( )( )( )	VS3046-( )H( )Y	LD111-0024 VS
LD111-0025-( )( )( )( )	VS3046-( )-( )Y	LD111-0025 VS

CODE IDENT. NO. 92215

APPROVED DATE 9 JULY 1971

REV. LETTER AND DATE (E) 20 MAY 1983

TITLE
BOLT, DOUBLE HEX HEAD
PH 13-8 Mo CRES
220 KSI TENSILE

STANDARD

VS 3046

SHEET 2 OF 2.

VSE601-34B

THIS DRAWING IS THE PROPERTY OF VSI CORPORATION. IT IS ISSUED FOR A PARTICULAR LIMITED PURPOSE. IT CONTAINS INFORMATION PROPRIETARY TO VSI CORPORATION. WHEN THE PURPOSE FOR WHICH IT HAS BEEN ISSUED HAS BEEN FULFILLED, THIS DRAWING SHOULD BE RETURNED TO VSI CORPORATION OR DESTROYED. AND ALL RIGHTS OF REPRODUCTION ARE RESERVED BY VSI CORPORATION.

Fairchild Fasteners

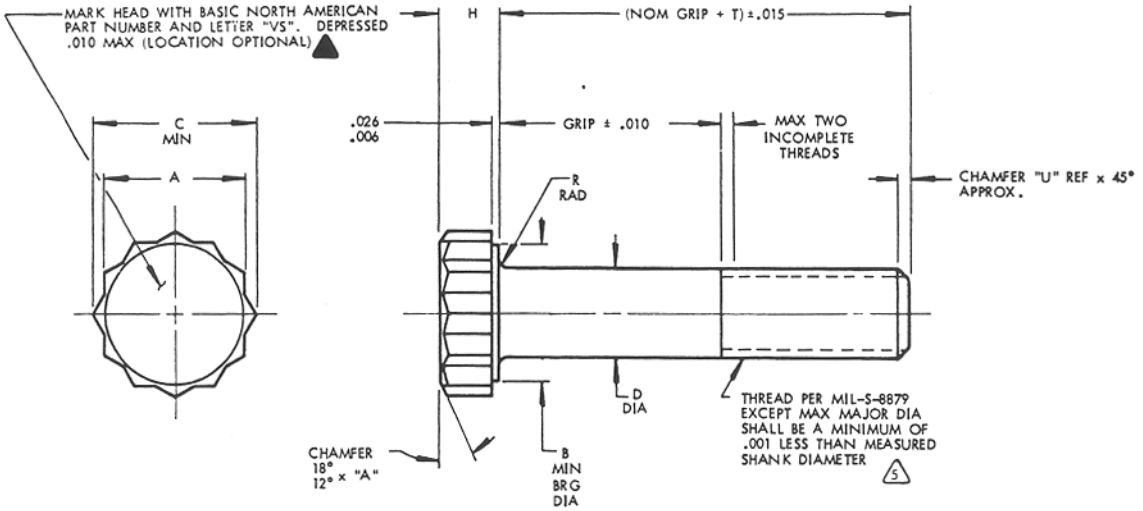

FIRST DASH NO. STANDARD	OVERSIZE FOR REPAIR ONLY 1/64 O.S.	OVERSIZE FOR REPAIR ONLY 1/32 O.S.	THREAD	A DIA	B MIN BRG DIA	C MIN	D DIA MIN	D DIA MAX	H	M 2	P DIA	R RAD 6	T BASIC	U REF	X TIR 1	Y TIR 1
-3			.1900-32 UNJF-3A	.376 .367	.359	.419	.1890	.1895	.150 .130	.214	.075 .070	.022 .016	.331	.040	.0045	.005
	-3( )X						.2021	.2026								
		-3( )Y					.2177	.2182								
-4			.2500-28 UNJF-3A	.439 .430	.422	.491	.2490	.2495	.174 .154	.255	.081 .076	.028 .022	.397	.050	.0045	.005
	-4( )X						.2646	.2651								
		-4( )Y					.2802	.2807								
-5			.3125-24 UNJF-3A	.502 .492	.484	.561	.3115	.3120	.197 .177	.293	.081 .076	.035 .029	.467	.050	.0045	.006
	-5( )X						.3271	.3276								
		-5( )Y					.3427	.3432								
-6			.3750-24 UNJF-3A	.564 .553	.546	.631	.3740	.3745	.220 .200	.335	.111 .106	.043 .033	.516	.060	.0045	.008
	-6( )X						.3896	.3901								
		-6( )Y					.4052	.4057								
-7			.4375-20 UNJF-3A	.689 .678	.671	.775	.4365	.4370	.267 .247	.365	.111 .106	.049 .039	.599	.060	.0060	.009
	-7( )X						.4521	.4526								
		-7( )Y					.4677	.4682								
-8			.5000-20 UNJF-3A	.752 .741	.734	.846	.4990	.4995	.291 .271	.396	.111 .106	.055 .045	.649	.080	.0060	.010
	-8( )X						.5146	.5151								
		-8( )Y					.5302	.5307								
-9			.5625-18 UNJF-3A	.877 .865	.859	.987	.5610	.5615	.338 .318	.462	.146 .141	.061 .051	.725	.080	.0060	.011
	-9( )X						.5766	.5771								
		-9( )Y					.5922	.5927								
-10			.6250-18 UNJF-3A	.940 .928	.922	1.059	.6235	.6240	.360 .340	.464	.146 .141	.068 .058	.777	.090	.0060	.012
	-10( )X						.6391	.6396								
		-10( )Y					.6547	.6552								
-12			.7500-16 UNJF-3A	1.064 1.052	1.031	1.200	.7485	.7490	.410 .390	.572	.146 .141	.080 .070	.914	.090	.0060	.015
	-12( )X						.7641	.7646								
		-12( )Y					.7797	.7802								
-14			.8750-14 UNJF-3A	1.252 1.239	1.218	1.414	.8735	.8740	.478 .458	.626	.146 .141	.093 .083	1.049	.100	.0090	.016
	-14( )X						.8891	.8896								
		-14( )Y					.9047	.9052								
-16			1.000-12 UNJF-3A	1.440 1.427	1.406	1.628	.9985	.9990	.549 .529	.715	.146 .141	.105 .095	1.218	.100	.0090	.020
	-16( )X						1.0141	1.0146								
		-16( )Y					1.0297	1.0302								
-18			1.125-12 UNJF-3A	1.627 1.614	1.593	1.842	1.1225	1.1240	.619 .599	.809	.146 .141	.118 .108	1.334	.130	.0090	.022
	-18( )X						1.1381	1.1396								
		-18( )Y					1.1537	1.1552								
-20			1.250-12 UNJF-3A	1.814 1.801	1.781	2.056	1.2475	1.2490	.700 .680	.854	.146 .141	.130 .120	1.449	.130	.0090	.025
	-20( )X						1.2631	1.2646								
		-20( )Y					1.2787	1.2802								
-22			1.375-12 UNJF-3A	2.002 1.988	1.968	2.269	1.3725	1.3740	.760 .740	.906	.146 .141	.143 .133	1.575	.130	.0120	.028
	-22( )X						1.3881	1.3896								
		-22( )Y					1.4037	1.4052								
-24			1.500-12 UNJF-3A	2.198 2.176	2.157	2.434	1.4970	1.4990	.830 .810	.976	.146 .141	.155 .145	1.700	.130	.0120	.030
	-24( )X						1.5121	1.5146								
		-24( )Y					1.5282	1.5302								

THIS DRAWING IS THE PROPERTY OF VSI CORPORATION. IT IS ISSUED FOR A PARTICULAR LIMITED PURPOSE. IT CONTAINS INFORMATION PROPRIETARY TO VSI CORPORATION. WHEN THE PURPOSE FOR WHICH IT HAS BEEN ISSUED HAS BEEN FULFILLED, THIS DRAWING SHOULD BE RETURNED TO VSI CORPORATION OR DESTROYED. AND ALL RIGHTS OF REPRODUCTION ARE RESERVED BY VSI CORPORATION.

CODE IDENT. NO.
92215

APPROVED DATE
4 AUGUST 1971

REV. LETTER AND DATE
E 16 AUGUST 1983

TITLE
BOLT, DOUBLE HEX HEAD
PH 13-8Mo CRES
125 KSI SHEAR

STANDARD
VS 3047
SHEET 1 OF 2.

VSE601-34B

Fairchild Fasteners

PROCUREMENT SPEC: NORTH AMERICAN ROCKWELL ST0160LB0009, TYPE II

MATERIAL: PH13-8Mo CRES PER AMS 5629.

HEAT TREAT: 125,000 PSI MINIMUM SHEAR. SEE PROCUREMENT SPEC.

FINISH CODE: "A" CODE - PASSIVATE PER QQ-P-35
"L" CODE - PASSIVATE PER QQ-P-35 AND APPLY LB0140-005 DRY FILM LUBRICANT TO SHANK .0004 MAX THICK PER LD0112-014. DO NOT DRY FILM LUBE THREADS

PART CODE: VS 3047 __ -4 12 X

- X: NO CODE = STANDARD SHANK (D) DIA; "X" CODE = 1/64 OVERSIZE SHANK (D) DIA; "Y" CODE = 1/32 OVERSIZE SHANK (D) DIA
- 12: NOMINAL GRIP LENGTH IN 16THS
- -4: NOMINAL DIAMETER IN 16THS
- __: FINISH (SEE "FINISH CODE")
- VS 3047: BASIC PART NUMBER

GENERAL NOTES:

1. CONCENTRICITY: "B" DIA TO THREAD PITCH DIA WITHIN "X" TIR. "B" AND "D" DIAMETER WITHIN "Y" TIR.
2. BEARING SURFACE OF HEAD SHALL BE SQUARE TO SHANK WITHIN +30'/-0º.
3. SHANK SHALL BE STRAIGHT WITHIN .003 TIR PER INCH OF BOLT LENGTH.
4. DIMENSIONS IN INCHES AND TO BE MET PRIOR TO LUBE, WHEN APPLICABLE.
5. THREADS AND HEAD TO SHANK FILLET RADIUS TO BE ROLLED AFTER HEAT TREAT.
6. SURFACE ROUGHNESS PER ANSI 846.1. BEARING SURFACE OF HEAD, HEAD TO SHANK FILLET, SHANK AND ALL THREAD ELEMENTS 32 MAX RHR. ALL OTHER SURFACES 125 MAX RHR.
7. FLOURESCENT PENETRANT INSPECT PER MIL-I-6866, 100%.

CROSS REFERENCE		▲ HEAD MARKING
NORTH AMERICAN ROCKWELL	VOI-SHAN	
LD111-0026-06 ( )	VS3047A6-( )	LD111-0026 VS
LD111-0026-36 ( )	VS3047L6-( )	LD111-0026 VS
LD111-0027-06 ( )	VS3047A6-( ) X	LD111-0027 VS
LD111-0027-36 ( )	VS3047L6-( ) X	LD111-0027 VS
LD111-0028-06 ( )	VS3047A6-( ) Y	LD111-0028 VS
LD111-0028-36 ( )	VS3047L6-( ) Y	LD111-0028 VS

CODE IDENT. NO. 92215

APPROVED DATE 4 AUGUST 1971

REV. LETTER AND DATE D 16 AUGUST 1983

THIRD ANGLE PROJECTION

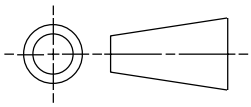

TITLE
BOLT, DOUBLE HEX HEAD
PH13-8Mo CRES
125 KSI SHEAR

STANDARD

VS 3047

SHEET 2 OF 2

THIS DRAWING IS THE PROPERTY OF VSI CORPORATION. IT IS ISSUED FOR A PARTICULAR LIMITED PURPOSE. IT CONTAINS INFORMATION PROPRIETARY TO VSI CORPORATION. WHEN THE PURPOSE FOR WHICH IT HAS BEEN ISSUED HAS BEEN FULFILLED, THIS DRAWING SHOULD BE RETURNED TO VSI CORPORATION OR DESTROYED. AND ALL RIGHTS OF REPRODUCTION ARE RESERVED BY VSI CORPORATION.

Fairchild Fasteners

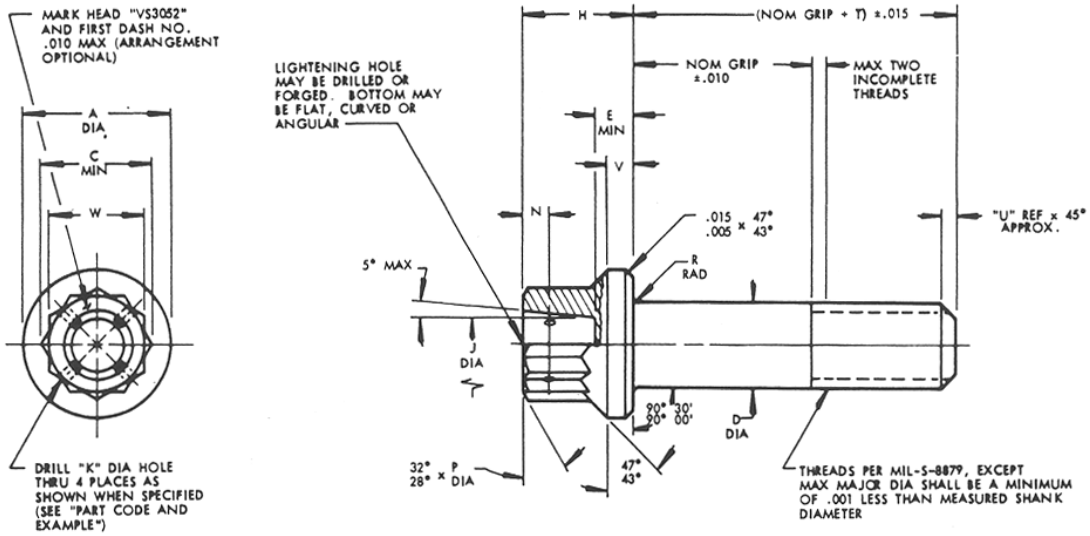

FIRST DASH NO.	THREADS	A DIA	C MIN	D DIA		E MIN		H	J DIA	K DIA	N	P DIA			R RAD		T Basic		U REF	V	W	X TIR ⚠1	Y TIR ⚠1	Z TIR ⚠1
- 3	.1900-32UNJF-3A	.350 .340	.312	.1895 .1885		.092		.270 .250	.171 .131	.042 .032	.073 .051	.281 .271			.041 .031		.406		.039	.078 .058	.282 .274	.005	.004	.0045
- 4	.2500-28UNJF-3A	.438 .425	.347	.2495 .2485		.135		.310 .290	.190 .150	.042 .032	.073 .051	.312 .297			.041 .031		.492		.045	.079 .059	.313 .304	.005	.004	.0045
- 5	.3125-24UNJF-3A	.531 .521	.419	.3120 .3110		.162		.358 .338	.225 .185	.060 .050	.081 .059	.375 .360			.041 .031		.579		.052	.092 .072	.376 .367	.006	.005	.0045
- 6	.3750-24UNJF-3A	.649 .639	.491	.3745 .3735		.197		.398 .378	.270 .230	.060 .050	.081 .059	.437 .422			.057 .047		.625		.052	.101 .081	.439 .430	.008	.006	.0045
- 7	.4375-20UNJF-3A	.750 .740	.561	.4370 .4360		.228		.445 .425	.330 .290	.060 .050	.081 .059	.500 .485			.057 .047		.721		.063	.109 .089	.502 .492	.009	.008	.0060
- 8	.5000-20UNJF-3A	.828 .818	.631	.4995 .4985		.254		.514 .494	.390 .350	.060 .050	.105 .083	.562 .547			.057 .047		.768		.063	.133 .113	.564 .553	.010	.008	.0060
- 9	.5625-18UNJF-3A	.938 .928	.703	.5615 .5605		.287		.567 .547	.450 .410	.060 .050	.105 .083	.625 .610			.057 .047		.852		.069	.143 .123	.627 .616	.011	.009	.0060
- 10	.6250-18UNJF-3A	1.050 1.040	.775	.6240 .6230		.327		.628 .608	.510 .470	.060 .050	.105 .083	.687 .672			.073 .063		.899		.069	.160 .140	.690 .679	.012	.010	.0060
- 12	.7500-16UNJF-3A	1.230 1.220	.917	.7490 .7480		.380		.721 .701	.580 .540	.060 .050	.105 .083	.812 .797			.073 .063		1.063		.078	.188 .168	.814 .803	.015	.012	.0060
- 14	.8750-14UNJF-3A	1.438 1.428	1.059	.8740 .8730		.438		.818 .798	.660 .620	.060 .050	.136 .114	.937 .922			.073 .063		1.244		.089	.208 .188	.940 .928	.018	.014	.0090
- 16	1.0000-12UNJF-3A	1.625 1.615	1.200	.9990 .9980		.493		.933 .913	.750 .710	.060 .050	.136 .114	1.062 1.047			.073 .063		1.479		.104	.232 .212	1.064 1.052	.020	.016	.0090
- 18	1.1250-12UNJF-3A	1.875 1.865	1.414	1.1240 1.1225		.556		1.061 1.041	.850 .810	.060 .050	.136 .114	1.250 1.235			.073 .063		1.650		.104	.268 .248	1.252 1.239	.022	.019	.0090
- 20	1.2500-12UNJF-3A	2.125 2.115	1.484	1.2490 1.2475		.636		1.165 1.145	.960 .920	.060 .050	.136 .114	1.312 1.297			.089 .077		1.760		.104	.279 .259	1.314 1.301	.025	.021	.0090
- 22	1.3750-12UNJF-3A	2.313 2.303	1.628	1.3740 1.3725		.698		1.276 1.256	1.080 1.040	.060 .050	.199 .177	1.437 1.422			.089 .077		1.885		.104	.284 .264	1.440 1.427	.028	.023	.0120
- 24	1.5000-12UNJF-3A	2.500 2.490	1.842	1.4990 1.4975		.750		1.444 1.424	1.210 1.170	.060 .050	.199 .177	1.625 1.610			.089 .077		2.010		.104	.345 .325	1.627 1.614	.030	.025	.0120

PROCUREMENT SPEC: NAS 4003 (HEX HEAD REQUIREMENTS)

MATERIAL: A-286 CRES PER AMS 5731 OR AMS 5737

HEAT TREAT: 160,00 PSI MINIMUM UTS

FINISH: PASSIVATE PER QQ-P-35

PART CODE & EXAMPLE: VS 3052 -8 H 15

- 15 — NOMINAL GRIP LENGTH IN 16THS
- H — DASH (-) DESIGNATES UNDRILLED HEAD; "H" DESIGNATES DRILLED HEAD
- -8 — NOMINAL DIAMETER IN 16THS
- VS 3052 — BASIC PART NUMBER

GENERAL NOTES:

1. ⚠1 CONCENTRICITY:"A", "D" AND "J" DIAMETERS WITHIN "X" TIR. "W" AND "J" DIAMETER WITHIN "Y" TIR. "D" DIAMETER AND THREAD PITCH DIAMETER WITHIN "Z" TIR.
2. SHANK SHALL BE STRAIGHT WITHIN .003 TIR PER INCH OF LENGTH
3. SURFACE ROUGHNESS PER ANSI 846.1. BEARING SURFACE OF HEAD, HEAD TO SHANK FILLET RADIUS, SHANK AND ALL THREAD ELEMENTS 32 MAX RHR. ALL OTHER SURFACES 126 MAX RHR.
4. REMOVE ALL BURRS AND BREAK ALL SHARP EDGES.
5. DIMENSIONS IN INCHES.

THIS DRAWING IS THE PROPERTY OF VSI CORPORATION. IT IS ISSUED FOR A PARTICULAR LIMITED PURPOSE. IT CONTAINS INFORMATION PROPRIETARY TO VSI CORPORATION. WHEN THE PURPOSE FOR WHICH IT HAS BEEN ISSUED HAS BEEN FULFILLED, THIS DRAWING SHOULD BE RETURNED TO VSI CORPORATION OR DESTROYED. AND ALL RIGHTS OF REPRODUCTION ARE RESERVED BY VSI CORPORATION.

RECOMMENDED NUT:
CONTACT VOI-SHAN

CODE IDENT. NO.
92215

APPROVED DATE
6 OCTOBER 1971

REV. LETTER AND DATE

TITLE
BOLT, 12 POINT EXTERNAL WRENCHING,
A-286 CRES
160,000 PSI MIN TENSILE

STANDARD

VS 3052

SHEET 1 OF 1.

VSE601-34B

Fairchild Fasteners

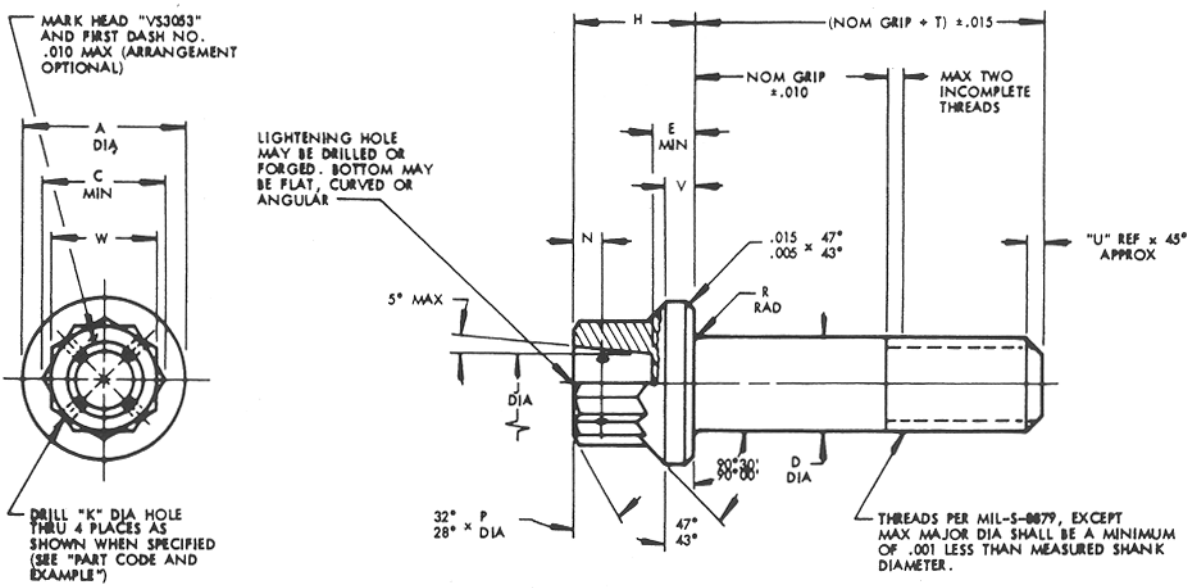

FIRST DASH NO.	THREADS	A DIA	C MIN	D DIA		E MIN		H	J DIA	K DIA	N	P DIA			R RAD		T Basic		U REF	V	W	X TIR 1	Y TIR 1	Z TIR 1
- 3	.1900-32UNJF-3A	.350 .340	.312	.1895 .1885		.092		.270 .250	.171 .131	.042 .032	.073 .051	.281 .271			.041 .031		.406		.039	.078 .058	.282 .274	.005	.004	.0045
- 4	.2500-28UNJF-3A	.438 .425	.347	.2495 .2485		.135		.310 .290	.190 .150	.042 .032	.073 .051	.312 .297			.041 .031		.492		.045	.079 .059	.313 .304	.005	.004	.0045
- 5	.3125-24UNJF-3A	.531 .521	.419	.3120 .3110		.162		.358 .338	.225 .185	.060 .050	.081 .059	.375 .360			.041 .031		.579		.052	.092 .072	.376 .367	.006	.005	.0045
- 6	.3750-24UNJF-3A	.649 .639	.491	.3745 .3735		.197		.398 .378	.270 .230	.060 .050	.081 .059	.437 .422			.057 .047		.625		.052	.101 .081	.439 .430	.008	.006	.0045
- 7	.4375-20UNJF-3A	.750 .740	.561	.4370 .4360		.228		.445 .425	.330 .290	.060 .050	.081 .059	.500 .485			.057 .047		.721		.063	.109 .089	.502 .492	.009	.008	.0060
- 8	.5000-20UNJF-3A	.828 .818	.631	.4995 .4985		.254		.514 .494	.390 .350	.060 .050	.105 .083	.562 .547			.057 .047		.768		.063	.133 .113	.564 .553	.010	.008	.0060
- 9	.5625-18UNJF-3A	.938 .928	.703	.5615 .5605		.287		.567 .547	.450 .410	.060 .050	.105 .083	.625 .610			.057 .047		.852		.069	.143 .123	.627 .616	.011	.009	.0060
- 10	.6250-18UNJF-3A	1.050 1.040	.775	.6240 .6230		.327		.628 .608	.510 .470	.060 .050	.105 .083	.687 .672			.073 .063		.899		.069	.160 .140	.690 .679	.012	.010	.0060
- 12	.7500-16UNJF-3A	1.230 1.220	.917	.7490 .7480		.380		.721 .701	.580 .540	.060 .050	.105 .083	.812 .797			.073 .063		1.063		.078	.188 .168	.814 .803	.015	.012	.0060
- 14	.8750-14UNJF-3A	1.438 1.428	1.059	.8740 .8730		.438		.818 .798	.660 .620	.060 .050	.136 .114	.937 .922			.073 .063		1.244		.089	.208 .188	.940 .928	.018	.014	.0090
- 16	1.0000-12UNJF-3A	1.625 1.615	1.200	.9990 .9980		.493		.933 .913	.750 .710	.060 .050	.136 .114	1.062 1.047			.073 .063		1.479		.104	.232 .212	1.064 1.052	.020	.016	.0090
- 18	1.1250-12UNJF-3A	1.875 1.865	1.414	1.1240 1.1225		.556		1.061 1.041	.850 .810	.060 .050	.136 .114	1.250 1.235			.073 .063		1.650		.104	.268 .248	1.252 1.239	.022	.019	.0090
- 20	1.2500-12UNJF-3A	2.125 2.115	1.484	1.2490 1.2475		.636		1.165 1.145	.960 .920	.060 .050	.136 .114	1.312 1.297			.089 .077		1.760		.104	.279 .259	1.314 1.301	.025	.021	.0090
- 22	1.3750-12UNJF-3A	2.313 2.303	1.628	1.3740 1.3725		.698		1.276 1.256	1.080 1.040	.060 .050	.199 .177	1.437 1.422			.089 .077		1.885		.104	.284 .264	1.440 1.427	.028	.023	.0120
- 24	1.5000-12UNJF-3A	2.500 2.490	1.842	1.4990 1.4975		.750		1.444 1.424	1.210 1.170	.060 .050	.199 .177	1.625 1.610			.089 .077		2.010		.104	.345 .325	1.627 1.614	.030	.025	.0120

PROCUREMENT SPEC: NAS 621

MATERIAL: 6Al-4V TITANIUM ALLOY PER AMS 4967

HEAT TREAT: 160,000 PSI MINIMUM UTS

FINISH: NONE

PART CODE & EXAMPLE: VS 3053 -8 H 15

- 15 — NOMINAL GRIP LENGTH IN 16THS
- H — DASH (-) DESIGNATES UNDRILLED HEAD; "H" DESIGNATES DRILLED HEAD
- -8 — NOMINAL DIAMETER IN 16THS
- VS 3053 — BASIC PART NUMBER

GENERAL NOTES:

1. CONCENTRICITY: "A", "D" AND "J" DIAMETERS WITHIN "X" TIR. "W" AND "J" DIAMETER WITHIN "Y" TIR. "D" DIAMETER AND THREAD PITCH DIAMETER WITHIN "Z"TIR.
2. SHANK SHALL BE STRAIGHT WITHIN .003 TIR PER INCH OF BOLT LENGTH
3. SURFACE ROUGHNESS PER ANSI 846.1. BEARING SURFACE OF HEAD, HEAD TO SHANK FILLET RADIUS, SHANK AND ALL THREAD ELEMENTS 32 RHR MAX. ALL OTHER SURFACES 125 RHR MAX.
4. REMOVE ALL BURRS AND BREAK ALL SHARP EDGES.
5. DIMENSIONS IN INCHES.

RECOMMENDED NUT:

CONTACT VOI-SHAN

CODE IDENT. NO.
92215

APPROVED DATE
6 OCTOBER 1971

REV. LETTER AND DATE

TITLE
BOLT, 12 POINT EXTERNAL WRENCHING,
6Al-4V TITANIUM ALLOY
160,000 PSI UTS

STANDARD

VS 3053

SHEET 1 OF 1.

THIS DRAWING IS THE PROPERTY OF VSI CORPORATION. IT IS ISSUED FOR A PARTICULAR LIMITED PURPOSE. IT CONTAINS INFORMATION PROPRIETARY TO VSI CORPORATION. WHEN THE PURPOSE FOR WHICH IT HAS BEEN ISSUED HAS BEEN FULFILLED, THIS DRAWING SHOULD BE RETURNED TO VSI CORPORATION OR DESTROYED. AND ALL RIGHTS OF REPRODUCTION ARE RESERVED BY VSI CORPORATION.

VSE601-34B

Fairchild Fasteners

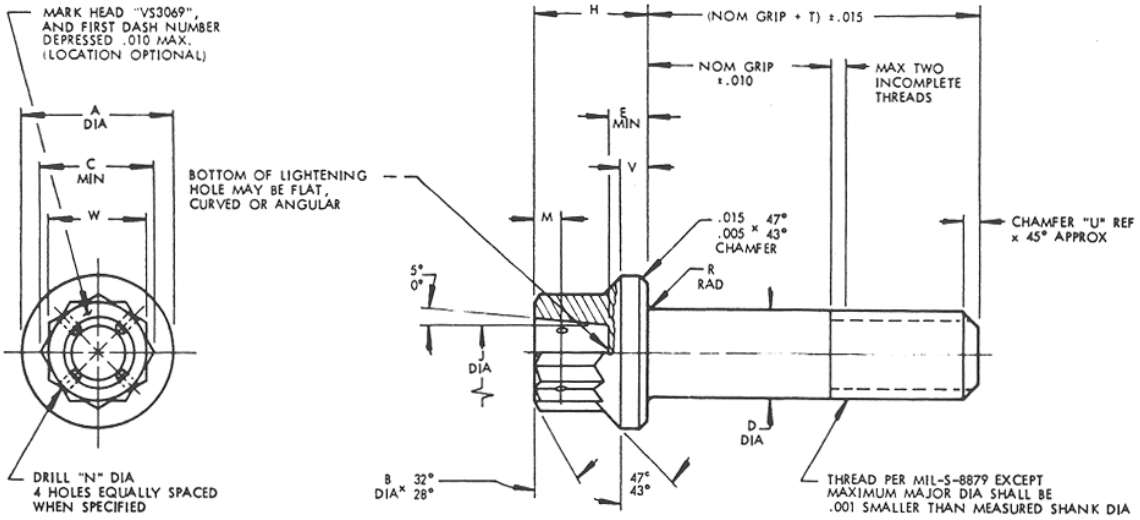

FIRST DASH NO.	THREADS	A DIA	B DIA	C MIN	D DIA	E MIN		H	J DIA		M	N DIA	R RAD	T Basic	U REF	V	W	CONCENTRICITY ⚠ X	Y	Z
- 3	.1900-32UNJF-3A	.369 .359	.250 .235	.277	.1895 .1885	.098		.224 .204	.166 .126		.072 .052	.042 .032	.041 .031	.390	.039	.050 .030	.251 .243	.005	.004	.0045
- 4	.2500-28UNJF-3A	.475 .465	.312 .297	.347	.2495 .2485	.135		.264 .244	.190 .150		.072 .052	.042 .032	.041 .031	.500	.045	.052 .032	.313 .304	.005	.004	.0045
- 5	.3125-24UNJF-3A	.585 .575	.375 .360	.419	.3120 .3110	.162		.329 .309	.225 .185		.080 .060	.060 .050	.041 .031	.593	.052	.060 .040	.376 .367	.006	.005	.0045
- 6	.3750-24UNJF-3A	.725 .715	.500 .485	.561	.3745 .3735	.197		.415 .395	.307 .267		.080 .060	.060 .050	.057 .047	.688	.052	.085 .065	.502 .492	.008	.006	.0045
- 7	.4375-20UNJF-3A	.830 .820	.562 .547	.631	.4370 .4360	.228		.474 .454	.330 .290		.080 .060	.060 .050	.057 .047	.813	.062	.093 .073	.564 .553	.009	.008	.0060
- 8	.5000-20UNJF-3A	.950 .940	.625 .610	.703	.4995 .4985	.254		.540 .520	.390 .350		.104 .084	.060 .050	.057 .047	.906	.062	.108 .088	.627 .616	.010	.008	.0060
- 9	.5625-18UNJF-3A	1.055 1.045	.750 .735	.846	.5615 .5605	.287		.610 .590	.450 .410		.104 .084	.060 .050	.057 .047	1.000	.069	.128 .108	.752 .741	.011	.009	.0060
- 10	.6250-18UNJF-3A	1.195 1.185	.812 .797	.917	.6240 .6230	.327		.683 .663	.479 .439		.104 .084	.060 .050	.073 .063	1.125	.069	.135 .115	.814 .803	.012	.010	.0060
- 12	.7500-16UNJF-3A	1.425 1.415	.937 .922	1.059	.7490 .7480	.380		.816 .796	.580 .540		.104 .084	.060 .050	.073 .063	1.281	.078	.162 .142	.940 .928	.015	.012	.0060
- 14	.8750-14UNJF-3A	1.645 1.635	1.125 1.110	1.271	.8740 .8730	.438		.975 .955	.760 .720		.135 .115	.060 .050	.073 .063	1.500	.089	.221 .201	1.127 1.115	.018	.014	.0090
- 16	1.0000-12UNJF-3A	1.880 1.870	1.250 1.235	1.414	.9990 .9980	.493		1.105 1.085	.853 .813		.135 .115	.060 .050	.073 .063	1.688	.089	.240 .220	1.252 1.239	.020	.016	.0090
- 18	1.1250-12UNJF-3A	2.100 2.090	1.437 1.421	1.628	1.1240 1.1225	.556		1.253 1.233	.963 .923		.135 .115	.060 .050	.073 .063	1.937	.104	.290 .270	1.440 1.427	.022	.019	.0090
- 20	1.2500-12UNJF-3A	2.355 2.345	1.625 1.609	1.842	1.2490 1.2475	.636		1.410 1.390	1.072 1.032		.135 .115	.060 .050	.089 .077	2.094	.104	.328 .308	1.627 1.614	.025	.021	.0090
- 22	1.3750-12UNJF-3A	2.590 2.580	1.750 1.734	1.986	1.3740 1.3725	.698		1.543 1.523	1.181 1.141		.198 .178	.060 .050	.089 .077	2.281	.104	.352 .332	1.752 1.739	.028	.023	.0120
- 24	1.5000-12UNJF-3A	2.825 2.815	1.875 1.859	2.128	1.4990 1.4975	.750		1.670 1.650	1.275 1.235		.198 .178	.060 .050	.089 .077	2.468	.104	.371 .351	1.877 1.863	.030	.025	.0120

PROCUREMENT SPECIFICATION: VSM 1572

FINISH CODE:
NO LETTER DESIGNATES VACUUM CADMIUM PLATE PER MIL-C-8837, TYPE II, CLASS 2 (450ºF)
LETTER "C" DESIGNATES DIFFUSED NICKEL CADMIUM PLATE PER AMS 2416 WITH CHROMATE TREATMENT (900ºF)
LETTER "F" DESIGNATES CADMIUM FLUOBORATE PLATE PER NAS 672 (450ºF) ⚠

PART CODE & EXAMPLE:

VS 3069 F 7 H 20

- 20 — DESIGNATES NOMINAL GRIP LENGTH IN 16THS
- H — DESIGNATES DRILLED HEAD; NO LETTER - NO DRILLING
- 7 — DESIGNATES NOMINAL SHANK DIAMETER IN 16THS
- F — DESIGNATES FINISH (SEE FINISH CODE)
- VS 3069 — BASIC VOI-SHAN PART NUMBER

GENERAL NOTES:

⚠ CONCENTRICITY: "A", "D" AND "J" DIAMETERS WITHIN "X" TIR.
"W" AND "J" DIAMETER WITHIN "Y" TIR.
"D" DIAMETER AND THREAD PITCH DIAMETER WITHIN "Z" TIR.

2. SURFACE ROUGHNESS PER ANSI 846.1. BEARING SURFACE OF HEAD, HEAD TO SHANK FILLET RADIUS, SHANK AND ALL THREAD ELEMENTS 32 MAX RHR. ALL OTHER SURFACES 125 MAX RHR.

3. DIMENSIONS IN INCHES AND TO BE MET AFTER PLATING.

⚠ CADMIUM FLUOBORATE PLATED PARTS REQUIRE 72 HOUR SUSTAINED LOAD TEST IN ACCORDANCE WITH TEST 5, MIL-STD-1312.

CODE IDENT. NO.
92215

APPROVED DATE
20 JUNE 1972

REV. LETTER AND DATE
B 21 SEPTEMBER 1976

TITLE
BOLT, 12 POINT, TENSION HEAD
450ºF AND 900ºF

STANDARD
VS 3069
SHEET 1 OF 1.

VSE601-34B

THIS DRAWING IS THE PROPERTY OF VSI CORPORATION. IT IS ISSUED FOR A PARTICULAR LIMITED PURPOSE. IT CONTAINS INFORMATION PROPRIETARY TO VSI CORPORATION. WHEN THE PURPOSE FOR WHICH IT HAS BEEN ISSUED HAS BEEN FULFILLED, THIS DRAWING SHOULD BE RETURNED TO VSI CORPORATION OR DESTROYED. AND ALL RIGHTS OF REPRODUCTION ARE RESERVED BY VSI CORPORATION.

Fairchild Fasteners

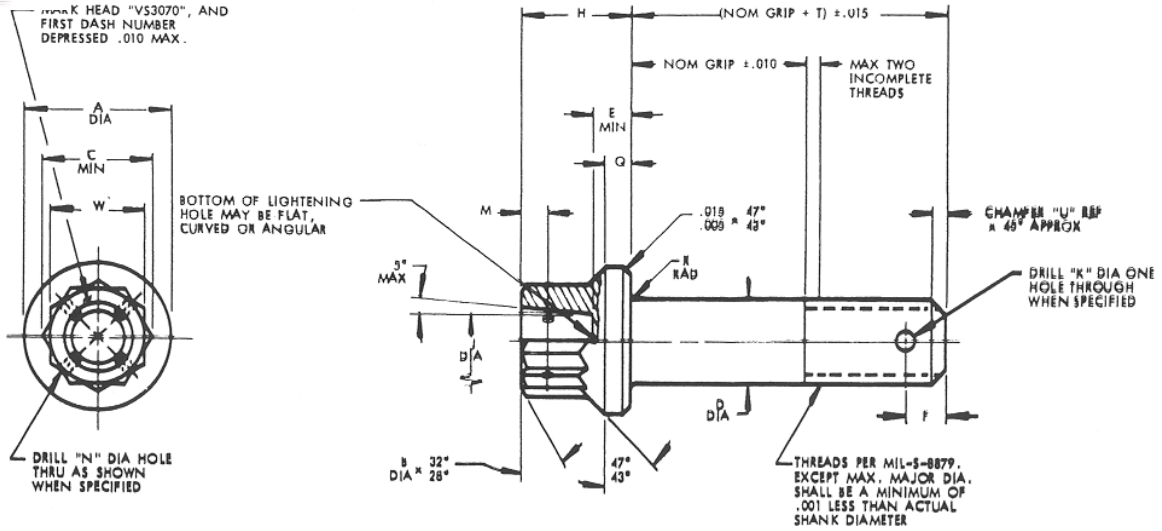

FIRST DASH NO.	THREADS	A DIA	B DIA	C MIN	D DIA	E MIN	F	H	J DIA	K DIA	M	N DIA	Q	R RAD	T	U REF	W	CONCENTRICITY ⚠ X TIR	Y TIR	Z TIR
- 3	.1900-32UNJF-3A	.350 .340	.250 .235	.277	.1895 .1885	.092	.173 .153	.285 .265	.135 .095	.075 .065	.072 .052	.042 .032	.074 .054	.041 .031	.334	.040	.251 .243	.005	.004	.0045
- 4	.2500-28UNJF-3A	.438 .428	.312 .297	.347	.2495 .2485	.135	.188 .168	.310 .290	.190 .150	.081 .071	.072 .052	.042 .032	.079 .059	.041 .031	.412	.040	.313 .304	.005	.004	.0045
- 5	.3125-24UNJF-3A	.531 .521	.375 .360	.419	.3120 .3110	.162	.191 .171	.358 .338	.225 .185	.081 .071	.080 .060	.060 .050	.092 .072	.041 .031	.480	.050	.376 .367	.006	.005	.0045
- 6	.3750-24UNJF-3A	.649 .639	.437 .422	.491	.3745 .3735	.197	.207 .187	.398 .378	.270 .230	.111 .101	.080 .060	.060 .050	.101 .081	.057 .047	.560	.050	.439 .430	.008	.006	.0045
- 7	.4375-20UNJF-3A	.750 .740	.500 .485	.561	.4370 .4360	.228	.211 .191	.445 .425	.330 .290	.111 .101	.080 .060	.060 .050	.109 .089	.057 .047	.665	.060	.502 .492	.009	.008	.0060
- 8	.5000-20UNJF-3A	.828 .818	.562 .547	.631	.4995 .4985	.254	.226 .206	.514 .494	.390 .350	.111 .101	.104 .084	.060 .050	.133 .113	.057 .047	.761	.060	.564 .553	.010	.008	.0060
- 9	.5625-18UNJF-3A	.938 .928	.625 .610	.703	.5615 .5605	.287	.228 .208	.567 .547	.450 .410	.146 .136	.104 .084	.060 .050	.143 .123	.057 .047	.828	.070	.627 .616	.011	.009	.0060
- 10	.6250-18UNJF-3A	1.050 1.040	.687 .672	.775	.6240 .6230	.327	.259 .239	.628 .608	.510 .470	.146 .136	.104 .084	.060 .050	.160 .140	.073 .063	.868	.070	.690 .679	.012	.010	.0060
- 12	.7500-16UNJF-3A	1.230 1.220	.812 .797	.917	.7490 .7480	.380	.262 .242	.721 .701	.580 .540	.146 .136	.104 .084	.060 .050	.188 .168	.073 .063	1.009	.080	.814 .803	.015	.012	.0060
- 14	.8750-14UNJF-3A	1.438 1.428	.937 .922	1.059	.8740 .8730	.438	.267 .247	.818 .798	.660 .620	.146 .136	.135 .115	.060 .050	.208 .188	.073 .063	1.175	.090	.940 .928	.018	.014	.0090
- 16	1.0000-12UNJF-3A	1.625 1.615	1.062 1.047	1.200	.9990 .9980	.493	.274 .254	.933 .913	.750 .710	.146 .136	.135 .115	.060 .050	.232 .212	.073 .063	1.345	.100	1.064 1.052	.020	.016	.0090
- 16A	1.0000-14UNJS-3A	1.625 1.615	1.062 1.047	1.200	.9990 .9980	.493	.274 .254	.933 .913	.750 .710	.146 .136	.135 .115	.060 .050	.232 .212	.073 .063	1.309	.090	1.064 1.052	.020	.016	.0090
- 18	1.1250-12UNJF-3A	1.875 1.865	1.250 1.235	1.414	1.1240 1.1225	.556	.367 .347	1.061 1.041	.850 .810	.146 .136	.135 .115	.060 .050	.268 .248	.073 .063	1.515	.100	1.252 1.239	.022	.019	.0090
- 20	1.2500-12UNJF-3A	2.125 2.115	1.312 1.297	1.484	1.2490 1.2475	.636	.399 .379	1.165 1.145	.960 .920	.146 .136	.135 .115	.060 .050	.279 .259	.089 .077	1.665	.100	1.314 1.301	.025	.012	.0090
- 22	1.3750-12UNJF-3A	2.313 2.303	1.437 1.422	1.628	1.3740 1.3725	.698	.518 .498	1.276 1.256	1.080 1.040	.146 .136	.198 .178	.060 .050	.284 .264	.089 .077	1.815	.100	1.440 1.427	.028	.023	.0120
- 24	1.5000-12UNJF-3A	2.500 2.490	1.625 1.610	1.842	1.4990 1.4975	.750	.585 .565	1.444 1.424	1.210 1.170	.146 .136	.198 .178	.060 .050	.345 .325	.089 .077	2.015	.100	1.627 1.614	.030	.023	.0120

PROCUREMENT SPEC: VSM 1572

FINISH CODE:
DASH (-) DESIGNATES VACUUM CADMIUM PLATE PER MIL-C-8837, TYPE II, CLASS 2 (450ºF)
LETTER "C" DESIGNATES DIFFUSED NICKEL CADMIUM PLATE PER AMS 2416 (900ºF)
LETTER "F" DESIGNATES CADMIUM FLUOBORATE PLATE PER NAS 672 (450ºF) ⚠
LETTER "W" DESIGNATES ALUMINUM COATING, CERAMIC BONDED PER AMS2506

PART CODE & EXAMPLE:

VS 3070 F 4 H 28

- 28 — NOMINAL GRIP LENGTH IN SIXTEENTHS
- H — DASH (-) DESIGNATES UNDRILLED HEAD; LETTER "H" DESIGNATES DRILLED HEAD; LETTER "D" DESIGNATES DRILLED THREAD
- 4 — NOMINAL DIAMETER IN SIXTEENTHS; LETTER "A" DESIGNATES SPECIAL PITCH THREAD ON -16 SIZE ONLY.
- F — DESIGNATES FINISH (SEE FINISH CODE)
- VS 3070 — BASIC PART NUMBER

GENERAL NOTES:

⚠ CONCENTRICITY: DIMENSIONS "A", "D" AND "J" WITHIN "X" TIR.
DIMENSIONS "W" AND "J" WITHIN "Y" TIR.
"D" DIAMETER AND THREAD PITCH DIAMETER WITHIN "Z" TIR.

2. SURFACE ROUGHNESS PER ANSI 846.1. BEARING SURFACE OF HEAD, HEAD TO SHANK FILLET RADIUS, SHANK AND ALL THREAD ELEMENTS 32 MAX RHR. ALL OTHER SURFACES 125 MAX RHR.

3. DIMENSIONS IN INCHES AND TO BE MET AFTER PLATING.

⚠ CADMIUM FLUOBORATE PLATED PARTS REQUIRE 72 HOUR SUSTAINED LOAD TEST IN ACCORDANCE WITH TEST 5, MIL-STD-1312.

5. BOLT SHALL SHOW NO EVIDENCE OF GRINDING BURNS WHEN SAMPLED AND EXAMINED IN ACCORDANCE WITH MIL-B-8906, PARA. 4.5.

CODE IDENT. NO.
92215

APPROVED DATE
21 JUNE 1972

REV. LETTER AND DATE
F

TITLE
BOLT, 12 POINT, TENSION HEAD
450ºF AND 900ºF

STANDARD

VS 3070

SHEET 1 OF 1.

THIS DRAWING IS THE PROPERTY OF VSI CORPORATION. IT IS ISSUED FOR A PARTICULAR LIMITED PURPOSE. IT CONTAINS INFORMATION PROPRIETARY TO VSI CORPORATION. WHEN THE PURPOSE FOR WHICH IT HAS BEEN ISSUED HAS BEEN FULFILLED, THIS DRAWING SHOULD BE RETURNED TO VSI CORPORATION OR DESTROYED. AND ALL RIGHTS OF REPRODUCTION ARE RESERVED BY VSI CORPORATION.

VSE601-34B

Fairchild Fasteners

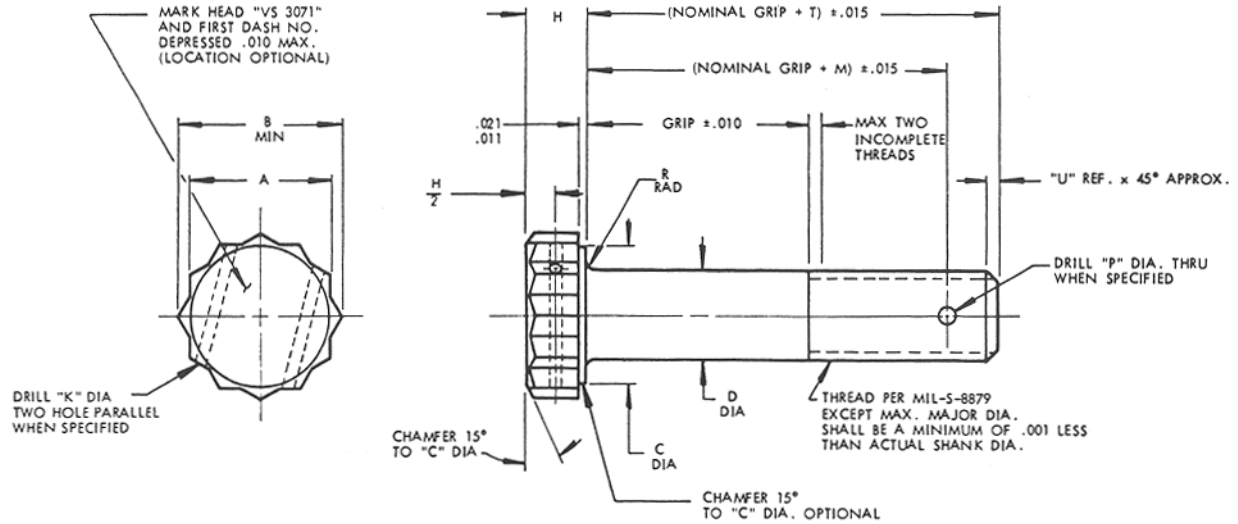

FIRST DASH NO.	THREADS	A	B MIN	C MIN DIA	D DIA		H	K	M		P DIA		R RAD		T BASIC		U REF	X TIR 1	Y TIR 1
- 3	.1900-32UNJF-3A	.376 .367	.419	.359	.1894 .1885		.150 .130	.051 .041	.135		.075 .070		.029 .009		.236		.039	.005	.0045
- 4	.2500-28UNJF-3A	.439 .430	.491	.422	.2492 .2483		.174 .154	.051 .041	.180		.080 .075		.035 .015		.293		.045	.005	.0045
- 5	.3125-24UNJF-3A	.502 .492	.561	.484	.3117 .3108		.197 .177	.075 .065	.232		.080 .075		.041 .021		.351		.052	.006	.0045
- 6	.3750-24UNJF-3A	.564 .553	.631	.546	.3742 .3733		.220 .200	.075 .065	.267		.110 .105		.047 .027		.400		.052	.008	.0045
- 7	.4375-20UNJF-3A	.689 .678	.775	.671	.4367 .4358		.267 .247	.075 .065	.341		.110 .105		.053 .033		.466		.062	.009	.0060
- 8	.5000-20UNJF-3A	.752 .741	.846	.734	.4991 .4982		.291 .271	.075 .065	.376		.110 .105		.060 .040		.516		.062	.010	.0060
- 9	.5625-18UNJF-3A	.877 .865	.987	.859	.5616 .5607		.338 .318	.075 .065	.471		.146 .140		.066 .046		.590		.069	.011	.0060
- 10	.6250-18UNJF-3A	.940 .928	1.059	.922	.6240 .6230		.360 .340	.075 .065	.513		.146 .140		.072 .052		.632		.069	.012	.0060
- 12	.7500-16UNJF-3A	1.064 1.052	1.200	1.031	.7490 .7480		.410 .390	.075 .065	.724		.146 .140		.085 .065		.852		.078	.014	.0060
- 14	.8750-14UNJF-3A	1.252 1.239	1.414	1.218	.8740 .8730		.478 .458	.075 .065	.858		.146 .140		.098 .078		.992		.089	.016	.0090
- 16	1.0000-12UNJF-3A	1.440 1.427	1.628	1.406	.9990 .9980		.549 .529	.075 .065	1.007		.146 .140		.110 .090		1.146		.104	.020	.0090
- 18	1.1250-12UNJF-3A	1.627 1.614	1.842	1.593	1.1240 1.1225		.619 .599	.075 .065	1.092		.146 .140		.122 .102		1.262		.104	.022	.0090
- 20	1.2500-12UNJF-3A	1.814 1.801	2.056	1.781	1.2490 1.2475		.700 .680	.075 .065	1.205		.146 .140		.135 .115		1.375		.104	.025	.0090
- 22	1.375-12UNJF-3A	2.002 1.988	2.269	1.968	1.3740 1.3725		.760 .740	.075 .065	1.330		.146 .140		.148 .128		1.504		.104	.028	.0120
- 24	1.5000-12UNJF-3A	2.190 2.176	2.434	2.157	1.4990 1.4975		.830 .810	.075 .065	1.454		.146 .140		.160 .140		1.628		.104	.030	.0120

PROCUREMENT SPECIFICATION: VSM 1573, TYPE B

FINISH CODE:
NO CODE LETTER - VACUUM CADMIUM PLATE PER MIL-C-8837, TYPE II, CLASS 2 (450ºF)
CODE LETTER "D" - DIFFUSED NICKEL CADMIUM PLATE PER AMS 2416 WITH CHROMATE TREATMENT (900ºF)
CODE LETTER "F" - CADMIUM FLUOBORATE PLATE PER NAS 672 (450ºF)

PART CODE & EXAMPLE:

VS 3071 F -8 12 —

- CODE LETTER "H" DESIGNATES DRILLED HEAD
- CODE LETTER "D" DESIGNATES DRILLED SHANK
- DESIGNATES NOMINAL GRIP LENGTH IN 16THS
- DESIGNATES NOM DIA IN 16THS
- DESIGNATES FINISH (SEE FINISH CODE)
- VOI-SHAN BASIC PART NUMBER

GENERAL NOTES:

1. CONCENTRICITY: WRENCHING FLATS TO SHANK WITHIN "X" TIR. SHANK DIAMETER TO THREAD PITCH DIAMETER WITHIN "Y" TIR.
2. HEAD BEARING SURFACE SHALL BE SQUARE TO SHANK WITHIN .003 TIR.
3. HEAD BEARING SURFACE DIAMETER "C" SHALL NOT EXCEED ACTUAL ACROSS FLATS DIMENSION.
4. SURFACE ROUGHNESS PER ANSI 846.1. BEARING SURFACE OF HEAD, HEAD TO SHANK FILLET RADIUS, SHANK AND ALL THREAD ELEMENTS 32 MAX RHR. ALL OTHER SURFACES 125 MAX RHR.
5. COTTER PIN HOLE SHALL BE WITHIN .010 AND NORMAL WITHIN 2º OF BOLT CENTERLINE.
6. DIMENSIONS IN INCHES AND TO BE MET AFTER PLATING.
7. BOLT SHALL SHOW NO EVIDENCE OF GRINDING BURNS WHEN SAMPLED AND EXAMINED IN ACCORDANCE WITH MIL-B-8906, PARA. 4.5.

CODE IDENT. NO. 92215

APPROVED DATE 19 JUNE 1972

REV. LETTER AND DATE D 2 JUNE 1977

TITLE
BOLT, 12 POINT, SHEAR HEAD
450ºF AND 900ºF

STANDARD

VS 3071

SHEET 1 OF 1.

VSE601-34B

THIS DRAWING IS THE PROPERTY OF VSI CORPORATION. IT IS ISSUED FOR A PARTICULAR LIMITED PURPOSE. IT CONTAINS INFORMATION PROPRIETARY TO VSI CORPORATION. WHEN THE PURPOSE FOR WHICH IT HAS BEEN ISSUED HAS BEEN FULFILLED, THIS DRAWING SHOULD BE RETURNED TO VSI CORPORATION OR DESTROYED. AND ALL RIGHTS OF REPRODUCTION ARE RESERVED BY VSI CORPORATION.

Fairchild Fasteners

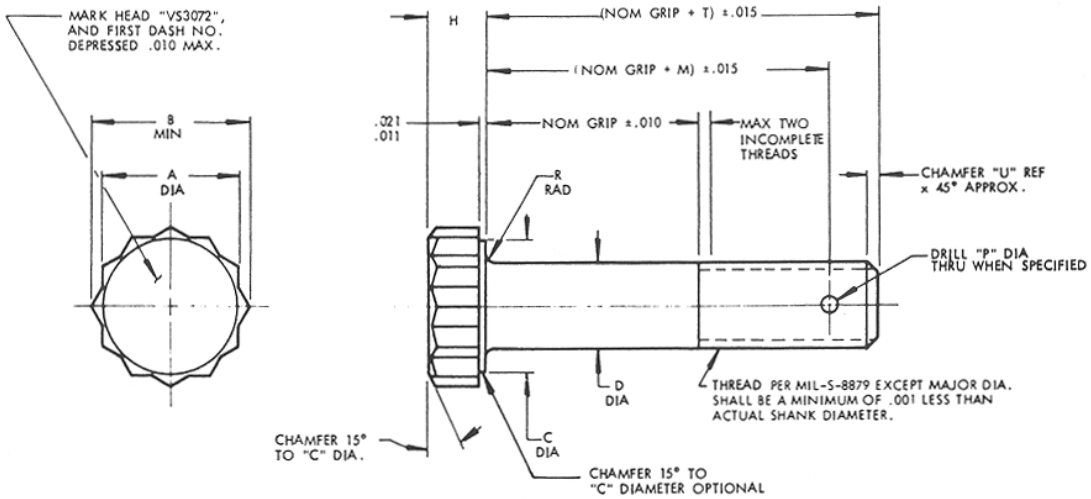

FIRST DASH NO.	THREADS	A DIA	B MIN	C DIA MIN	D DIA	H	M		P DIA	R RAD		T REF	U			X TIR ⚠1	Y TIR ⚠1		
- 3	.1900-32UNJF-3A	.376 .367	.419	.359	.1894 .1885	.150 .130	⚠7		⚠7	.029 .009		.236	.03			.005	.0045		
- 4	.2500-28UNJF-3A	.439 .430	.491	.422	.2492 .2483	.174 .154	⚠7		⚠7	.035 .015		.293	.03			.005	.0045		
- 5	.3125-24UNJF-3A	.502 .492	.561	.484	.3117 .3108	.197 .177	.240		.076 .086	.041 .021		.359	.04			.006	.0045		
- 6	.3750-24UNJF-3A	.564 .553	.631	.546	.3742 .3733	.220 .200	.286		.106 .116	.047 .027		.419	.04			.008	.0045		
- 7	.4375-20UNJF-3A	.689 .678	.775	.671	.4367 .4358	.267 .247	.370		.106 .116	.053 .033		.495	.05			.009	.0060		
- 8	.5000-20UNJF-3A	.752 .741	.846	.734	.4991 .4982	.291 .271	.421		.106 .116	.060 .040		.561	.05			.010	.0060		
- 9	.5625-18UNJF-3A	.877 .865	.987	.859	.5616 .5607	.338 .318	.523		.151 .141	.066 .046		.642	.05			.011	.0060		
- 10	.6250-18UNJF-3A	.940 .928	1.059	.922	.6240 .6230	.360 .340	.598		.151 .141	.072 .052		.717	.05			.012	.0060		
- 12	.7500-16UNJF-3A	1.064 1.052	1.200	1.031	.7490 .7480	.410 .390	.931		.151 .141	.085 .065		1.059	.09			.014	.0060		
- 14	.8750-14UNJF-3A	1.252 1.239	1.414	1.218	.8740 .8730	.478 .458	1.136		.151 .141	.098 .078		1.270	.10			.016	.0090		
- 16	1.0000-12UNJF-3A	1.440 1.427	1.628	1.406	.9990 .9980	.549 .529	1.357		.151 .141	.110 .090		1.496	.10			.020	.0090		

PROCUREMENT SPECIFICATION: VSM 1573, TYPE D

FINISH CODE:
NO CODE LETTER - VACUUM CADMIUM PLATE PER MIL-C-8837, TYPE II, CLASS 2 (450ºF)
CODE LETTER "D" - DIFFUSED NICKEL CADMIUM PLATE PER AMS 2416 WITH CHROMATE TREATMENT (900ºF)
CODE LETTER "W" DESIGNATES ALUMINUM COATING, CERAMIC BONDED PER AMS 2506.
CODE LETTER "F" DESIGNATES VACUUM CADMIUM PLATE PER MIL-C-8837, TYPE II, CLASS 2 (450ºF).

PART CODE & EXAMPLE:

VS 3072 D -8 12 S

- S — DESIGNATES DRILLED SHANK (WHEN SPECIFIED)
- 12 — DESIGNATES NOMINAL GRIP IN 16THS
- -8 — DESIGNATES NOM DIA IN 16THS
- D — DESIGNATES FINISH (SEE FINISH CODE)
- VS 3072 — VOI-SHAN BASIC PART NUMBER

GENERAL NOTES:

⚠1 CONCINTRICITY: WRENCHING FLATS TO SHANK WITHIN "X" TIR.
SHANK DIAMETER TO THREAD PITCH DIAMETER WITHIN "Y" TIR.

2. HEAD BEARING SURFACE SHALL BE SQUARE TO SHANK WITHIN .003 TIR.

3. HEAD BEARING SURFACE DIAMETER "C" SHALL NOT EXCEED ACTUAL ACROSS FLATS DIMENSION.

4. SURFACE ROUGHNESS PER ANSI 846.1. HEAD BEARING SURFACE, HEAD TO SHANK FILLET RADIUS, SHANK AND ALL THREAD ELEMENTS 32 MAX RHR. ALL OTHER SURFACES 125 MAX RHR.

5. COTTER PIN HOLE SHALL BE WITHIN .010 AND NORMAL WITHIN 2º OF BOLT CENTERLINE.

6. DIMENSIONS IN INCHES AND TO BE MET AFTER PLATING.

⚠7 DUE TO SPACE LIMITATIONS, COTTER PIN HOLE NOT RECOMMENDED FOR -3 AND -4 SIZES.

8. BOLT SHALL SHOW NO EVIDENCE OF GRINDING BURNS WHEN SAMPLED AND EXAMINED IN ACCORDANCE WITH MIL-B-8906, PARA. 4.5.

CODE IDENT. NO.
92215

APPROVED DATE
21 JUNE 1972

REV. LETTER AND DATE
D 21 SEPTEMBER 1976

TITLE
BOLT, 12 POINT, SHEAR HEAD
450ºF AND 900ºF

STANDARD
VS 3072
SHEET 1 OF 1.

VSE601-34B

THIS DRAWING IS THE PROPERTY OF VSI CORPORATION. IT IS ISSUED FOR A PARTICULAR LIMITED PURPOSE. IT CONTAINS INFORMATION PROPRIETARY TO VSI CORPORATION. WHEN THE PURPOSE FOR WHICH IT HAS BEEN ISSUED HAS BEEN FULFILLED, THIS DRAWING SHOULD BE RETURNED TO VSI CORPORATION OR DESTROYED. AND ALL RIGHTS OF REPRODUCTION ARE RESERVED BY VSI CORPORATION.

Fairchild Fasteners

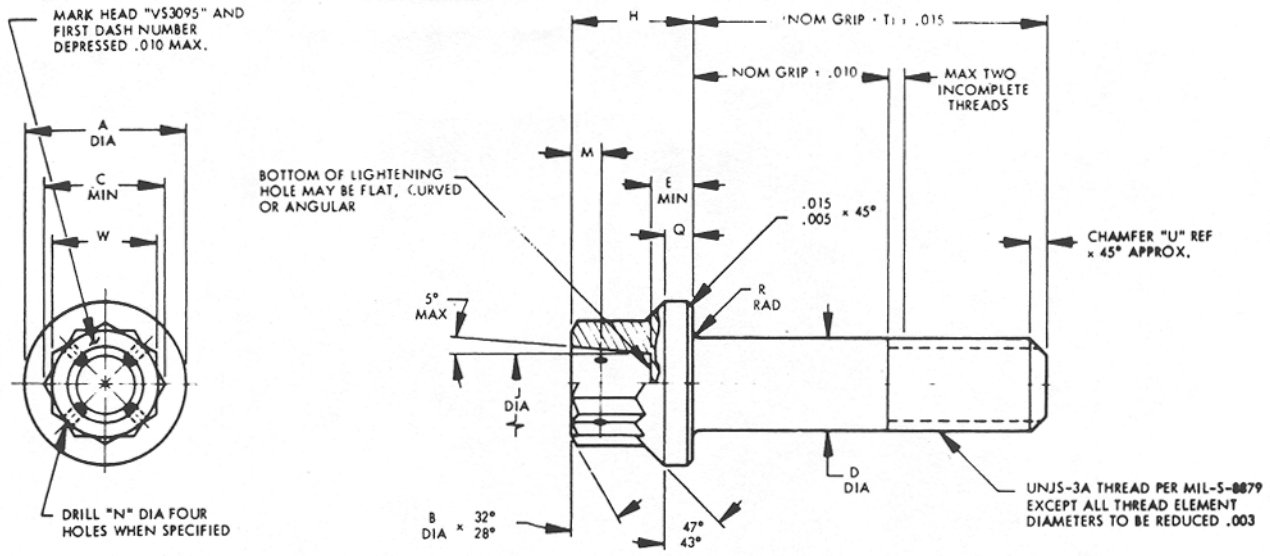

FIRST DASH NO.	THREAD UNJS	A DIA	B DIA	C MIN	D DIA	E MIN	H	J DIA	M	N DIA	Q	R RAD	T	U REF	Concentricity ⚠1 X TIR	Y TIR	Z TIR			Tensile Load Lb Min ⚠7	Shear Load Lb Min ⚠7	Stress Rupture Lb Min ⚠7
- 06	.138-40	.260 .240	.218 .208	.242	.1375 .1365	.059	.228 .208	.135 .095	.072 .052	.042 .032	.060 .040	.020 .010	.325	.030	.005	.004	.003			1620	2690	730
- 08	.164-36	.300 .290	.250 .240	.277	.1635 .1625	.076	.240 .220	.154 .114	.072 .052	.042 .032	.072 .052	.025 .015	.364	.030	.005	.004	.003			2360	3800	1060
- 3	.190-32	.350 .340	.281 .271	.312	.1895 .1885	.091	.270 .250	.171 .141	.072 .052	.042 .032	.078 .058	.030 .020	.403	..040	.005	.004	.0045			3210	5100	1440
- 4	.250-28	.438 .428	.312 .297	.350	.2495 .2485	.135	.310 .290	.190 .150	.072 .052	.042 .032	.079 .059	.040 .030	.485	.040	.005	.004	.0045			5780	8840	2600
- 5	.3125-24	.531 .521	.375 .360	.420	.3120 .3110	.162	.358 .338	.225 .185	.080 .060	.060 .050	.092 .072	.040 .030	.572	.050	.006	.005	.0045			9210	13800	4140
- 6	.375-25	.649 .639	.437 .422	.492	.3745 .3735	.197	.398 .378	.270 .230	.080 .060	.060 .050	.101 .081	.057 .047	.619	.050	.008	.006	.0045			14000	19980	6300
- 7	.4375-20	.750 .740	.500 .485	.565	.4370 .4360	.228	.445 .425	.330 .290	.080 .060	.060 .050	.109 .089	.057 .047	.694	.060	.009	.008	.006			19000	27100	8550
- 8	.500-20	.828 .818	.562 .547	.636	.4995 .4985	.254	.514 .494	.390 .350	.104 .084	.060 .050	.133 .113	.057 .047	.741	.060	.010	.008	.006			25400	35300	11400
- 9	.5625-18	.938 .928	.625 .610	.709	.5615 .5605	.287	.567 .547	.450 .410	.104 .084	.060 .050	.143 .123	.057 .047	.826	.070	.011	.009	.006			32300	44700	14500
- 10	.625-18	1.050 1.040	.687 .672	.782	.6240 .6230	.327	.628 .608	.510 .470	.104 .084	.060 .050	.160 .140	.073 .063	.873	.070	.012	.010	.006			40400	55200	18200
- 12	.750-16	1.230 1.220	.812 .797	.926	.7490 .7480	.380	.721 .701	.580 .540	.104 .084	.060 .050	.188 .168	.073 .063	.993	.080	.015	.012	.006			58800	79500	26500
- 14	.875-14	1.438 1.428	.937 .922	1.071	.8740 .8730	.438	.818 .798	.660 .620	.135 .115	.060 .050	.208 .188	.073 .063	1.194	.090	.018	.014	.009			80300	108200	36100
- 16	1.000-12	1.625 1.615	1.062 1.047	1.212	.9990 .9980	.493	.933 .913	.750 .710	.135 .115	.060 .050	.232 .212	.073 .063	1.382	.100	.020	.016	.009			104700	14100	47100

PROCUREMENT SPEC: AMS 7471 EXCEPT AS NOTED

MATERIAL: WASPALOY PER AMS 5708

HEAT TREAT: 150,00 PSI MINIMUM ULTIMATE TENSILE STRENGTH

FINISH: NO CODE: SILVER PLATE .0003 MINIMUM THICK PER AMS 2410
"U" CODE: UNPLATED, PASSIVATED PER QQ-P-35

PART CODE & EXAMPLE: VS 3052 -4 H 28 U

- U — DESIGNATES UNPLATED BOLT
- 28 — NOMINAL GRIP LENGTH IN SIXTEENTHS
- H — DASH (-) DESIGNATES UNDRILLED HEAD; LETTER "H" DESIGNATES DRILLED HEAD
- -4 — NOMINAL DIAMETER AS TABULATED
- VS 3052 — BASIC PART NUMBER

GENERAL NOTES:

⚠1 CONCENTRICITY: DIMENSIONS "A", "D" AND "J" WITHIN "X" TIR.
DIMENSIONS "W" AND "J" WITHIN "Y" TIR.
"D" DIAMETER AND THREAD PITCH DIAMETER WITHIN "Z" TIR.

2. SHANK SHALL BE STRAIGHT WITHIN .003 TIR PER INCH OF BOLT LENGTH.
3. BEARING SURACE OF HEAD TO BE SQUARE WITH SHANK WITHIN .003 TIR.
4. SURFACE ROUGHNESS PER ANSI 846.1. BEARING SURFACE OF HEAD, HEAD TO SHANK FILLET RADIUS, SHANK AND ALL THREAD ELEMENTS 32 MAX RHR. ALL OTHER SURFACES 125 MAX RHR.
5. HEADS OF BOLTS TO BE FORGED, HEAD TO SHANK FILLET AREA TO BE COLD WORKED AND THREADS TO BE ROLLED.
6. FLUORESCENT PENETRANT INSPECT 100% PER MIL-I-6866.
7. TENSILE TEST PER MIL-STD-1312, TEST NO 8; SHEAR TEST PER MIL-STD-1312, TEST NO 13; AND STRESS RUPTURE TEST PER MIL-STD-1312, TEST NO. 13, TEST TEMPERATURE 1350ºF.
8. DIMENSIONS IN INCHES AND TO BE MET AFTER PLATING.

CODE IDENT. NO. 92215

APPROVED DATE 10 MAY 1973

REV. LETTER AND DATE (A) 14 JUNE 1973

TITLE
BOLT, TENSION, 12 POINT
WASPALOY
150,000 PSI UTS

STANDARD

VS 3095

SHEET 1 OF 1.

VSE601-34B

THIS DRAWING IS THE PROPERTY OF VSI CORPORATION. IT IS ISSUED FOR A PARTICULAR LIMITED PURPOSE. IT CONTAINS INFORMATION PROPRIETARY TO VSI CORPORATION. WHEN THE PURPOSE FOR WHICH IT HAS BEEN ISSUED HAS BEEN FULFILLED, THIS DRAWING SHOULD BE RETURNED TO VSI CORPORATION OR DESTROYED. AND ALL RIGHTS OF REPRODUCTION ARE RESERVED BY VSI CORPORATION.

Fairchild Fasteners

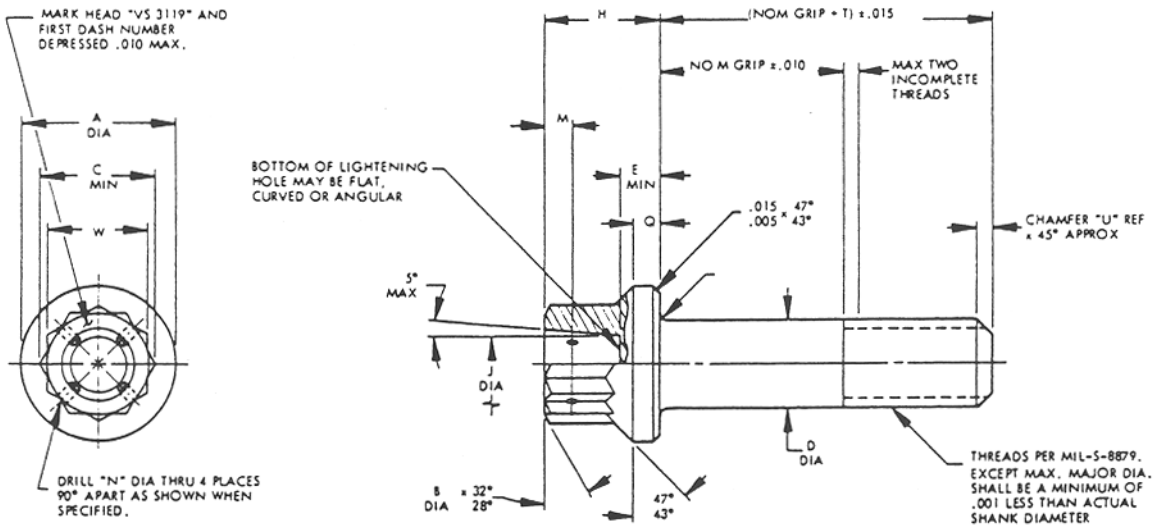

FIRST DASH NO.	THREAD	A DIA	B DIA	C MIN	D DIA	E MIN		Hf ±.010	J DIA		M	N DIA	Q	R RAD	T REF	U	W	X ⚠1	Y ⚠1	Z ⚠1			
- 3	.1900-32 UNJF-3A	.369 .359	.250 .235	.277	.1895 .1885	.098		.214	.166 .126		.067 .057	.042 .032	.050 .030	.041 .031	.419	.04	.251 .243	.005	.004	.0045			
- 4	.2500-28 UNJF-3A	.475 .465	.312 .297	.347	.2495 .2485	.135		.254	.190 .150		.067 .057	.042 .032	.052 .032	.041 .031	.531	.05	.313 .304	.005	.004	.0045			
- 5	.3125-24 UNJF-3A	.585 .575	.375 .360	.419	.3120 .3110	.162		.319	.225 .185		.075 .065	.060 .050	.060 .040	.041 .031	.611	.05	.376 .367	.006	.005	.0045			
- 6	.3750-24 UNJF-3A	.725 .715	.500 .485	.561	.3745 .3735	.197		.405	.307 .267		.075 .065	.060 .050	.085 .065	.057 .047	.707	.06	.502 .492	.008	.006	.0045			
- 7	.4375-20 UNJF-3A	.830 .820	.562 .547	.631	.4370 .4360	.228		.464	.330 .290		.075 .065	.060 .050	.093 .073	.057 .047	.814	.06	.564 .553	.009	.008	.0060			
- 8	.5000-20 UNJF-3A	.950 .940	.625 .610	.703	.4995 .4985	.254		.530	.390 .350		.099 .089	.060 .050	.108 .088	.057 .047	.926	.08	.627 .616	.010	.008	.0060			
- 9	.5625-18 UNJF-3A	1.055 1.045	.750 .735	.846	.5615 .5605	.287		.600	.450 .410		.099 .089	.060 .050	.128 .108	.073 .063	1.025	.08	.752 .741	.011	.009	.0060			
- 10	.6250-18 UNJF-3A	1.195 1.185	.812 .797	.917	.6240 .6230	.327		.673	.479 .439		.099 .089	.060 .050	.135 .115	.073 .063	1.152	.09	.814 .803	.012	.010	.0060			
- 12	.7500-16 UNJF-3A	1.425 1.415	.937 .922	1.059	.7490 .7480	.380		.806	.580 .540		.099 .089	.060 .050	.162 .142	.073 .063	1.314	.09	.940 .928	.015	.012	.0060			
- 14	.8750-14 UNJF-3A	1.645 1.635	1.125 1.110	1.271	.8740 .8730	.438		.965	.760 .720		.130 .120	.060 .050	.221 .201	.073 .063	1.520	.10	1.127 1.115	.018	.014	.0090			
- 16	1.0000-12 UNJF-3A	1.880 1.870	1.250 1.235	1.414	.9990 .9980	.493		1.095	.853 .813		.130 .120	.060 .050	.240 .220	.073 .063	1.773	.10	1.252 1.239	.020	.016	.0090			
- 18	1.1250-12 UNJF-3A	2.100 2.090	1.437 1.422	1.628	1.1240 1.1225	.556		1.243	.963 .923		.130 .120	.060 .050	.290 .270	.073 .063	1.976	.10	1.440 1.427	.022	.019	.0090			

PROCUREMENT SPECIFICATION: VSM 1645

FINISH CODE:

DASH (-) DESIGNATES VACUUM CADMIUM PLATE PER MIL-C-8837, TYPE II, CLASS 2 (450ºF)
LETTER "C" DESIGNATES DIFFUSED NICKEL CADMIUM PLATE PER AMS 2416 WITH CHROMATE TREATMENT (900ºF)
LETTER "W" DESIGNATES ALUMINUM COATING, CERAMIC BONDED PER AMS2506
LETTER "F" DESIGNATES FLUOBORATE CADMIUM PLATE PER NAS672.
LETTER "N" DESIGNATES NO PLATING, COAT WITH A RUST PREVENTATIVE OIL OR GREASE.

PART CODE & EXAMPLE:

VS 3119 C 4 H 28

- 28 — NOMINAL GRIP LENGTH IN SIXTEENTHS
- H — DASH (-) DESIGNATES UNDRILLED HEAD; LETTER "H" DESIGNATES DRILLED HEAD
- 4 — NOMINAL DIAMETER IN SIXTEENTHS
- C — DESIGNATES FINISH (SEE FINISH CODE)
- VS 3119 — BASIC PART NUMBER

GENERAL NOTES:

⚠1 CONCENTRICITY: DIMENSIONS "A", "D" AND "J" WITHIN "X" TIR.
DIMENSIONS "W" AND "J" WITHIN "Y" TIR.
"D" DIAMETER AND THREAD PITCH DIAMETER WITHIN "Z" TIR.

2. SURFACE ROUGHNESS PER ANSI 846.1. BEARING SURFACE OF HEAD, HEAD TO SHANK FILLET RADIUS, SHANK AND ALL THREAD ELEMENTS 32 MAX RHR. ALL OTHER SURFACES 125 MAX RHR.

3. DIMENSIONS IN INCHES AND TO BE MET AFTER PLATING (WHERE APPLICABLE).

4. BOLT SHALL SHOW NO EVIDENCE OF GRINDING BURNS WHEN SAMPLED AND EXAMINED IN ACCORDANCE WITH MIL-B-8906, PARA. 4.5.

CODE IDENT. NO. 92215

APPROVED DATE 7 JUNE 1974

REV. LETTER AND DATE (E) 6 OCTOBER 1981

TITLE
BOLT, 12 POINT, TENSION HEAD
450ºF AND 900ºF

STANDARD

VS 3119

SHEET 1 OF 1.

THIS DRAWING IS THE PROPERTY OF VSI CORPORATION. IT IS ISSUED FOR A PARTICULAR LIMITED PURPOSE. IT CONTAINS INFORMATION PROPRIETARY TO VSI CORPORATION. WHEN THE PURPOSE FOR WHICH IT HAS BEEN ISSUED HAS BEEN FULFILLED, THIS DRAWING SHOULD BE RETURNED TO VSI CORPORATION OR DESTROYED. AND ALL RIGHTS OF REPRODUCTION ARE RESERVED BY VSI CORPORATION.

VSE601-34B

Fairchild Fasteners

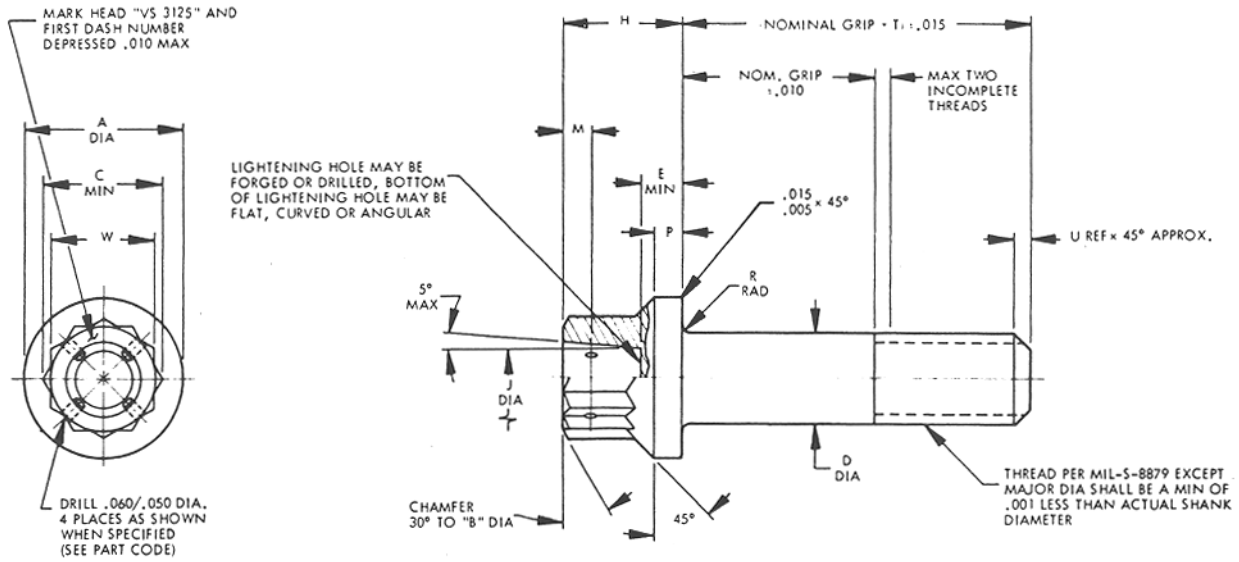

FIRST DASH NO.	THREAD	A DIA	B DIA	C MIN	D DIA	E MIN		H	J DIA		M	P	R RAD	T	U REF	W	X ⚠1	Y ⚠1	Z ⚠1				
- 4	.2500-28UNJF-3A	.438 .428	.305 .295	.347	.2495 .2485	.130		.310 .290	.190 .150		.073 .051	.074 .054	.041 .031	.750	.045	.315 .305	.005	.007	.0045				
- 5	.3125-24UNJF-3A	.531 .521	.367 .357	.418	.3120 .3110	.150		.358 .338	.225 .185		.081 .059	.092 .072	.041 .031	.875	.052	.377 .367	.006	.008	.0045				
- 6	.3750-24UNJF-3A	.649 .639	.429 .419	.489	.3745 .3735	.190		.398 .378	.270 .230		.081 .059	.101 .081	.059 .049	1.000	.052	.439 .429	.008	.010	.0045				
- 7	.4375-20UNJF-3A	.750 .740	.493 .483	.562	.4370 .4360	.210		.445 .425	.330 .290		.105 .083	.109 .089	.059 .049	1.125	.062	.503 .493	.009	.011	.006				
- 8	.5000-20UNJF-3A	.828 .818	.556 .546	.633	.4995 .4985	.250		.514 .494	.390 .350		.105 .083	.133 .113	.059 .049	1.250	.062	.566 .556	.010	.012	.006				
- 9	.5625-18UNJF-3A	.938 .928	.618 .608	.704	.5615 .5605	.270		.567 .547	.450 .410		.105 .083	.143 .123	.059 .049	1.375	.069	.628 .618	.011	.014	.006				
- 10	.6250-18UNJF-3A	1.050 1.040	.681 .671	.776	.6240 .6230	.310		.628 .608	.510 .470		.105 .083	.160 .140	.073 .063	1.500	.069	.691 .681	.012	.016	.006				
- 12	.7500-16UNJF-3A	1.230 1.220	.807 .797	.919	.7490 .7480	.370		.721 .701	.580 .540		.105 .083	.188 .168	.073 .063	1.750	.078	.817 .807	.015	.018	.006				
- 14	.8750-14UNJF-3A	1.438 1.428	.933 .923	1.063	.8740 .8730	.430		.818 .798	.660 .620		.136 .114	.208 .188	.073 .063	2.000	.089	.943 .933	.018	.022	.009				
- 16	1.0000-12UNJF-3A	1.625 1.615	1.056 1.046	1.203	.9990 .9980	.490		.942 .922	.750 .710		.136 .114	.230 .210	.073 .063	2.125	.104	1.066 1.056	.020	.025	.009				

PROCUREMENT SPEC: MIL-B-8831

MATERIAL: ALLOY STEEL PER MIL-S-6049 (8740) OR MIL-S-5000 (4340).

FINISH: CADMIUM PLATE PER QQ-P-416, TYPE II, CLASS 2.

PART CODE & EXAMPLE: VS 3125 -4 H -20

- -20 — DESIGNATES NOMINAL GRIP LENGTH IN 16THS.
- H — LETTER "H" IN LIEU OR DASH DESIGNATES DRILLED HEAD
- -4 — DESIGNATES NOMINAL DIAMETER IN 16THS.
- VS 3125 — VOI-SHAN BASIC PART NUMBER.

GENERAL NOTES:

⚠1 CONCENTRICITY: DIMENSIONS "A", "D" AND "J" SHALL BE CONCENTRIC TO EACH OTHER WITHIN "X" TIR.
DIMENSIONS "W" AND "J" SHALL BE CONCENTRIC TO EACH OTHER WITHIN "Y" TIR.
DIMENSION "D" SHALL BE CONCENTRIC TO THREAD PITCH DIAMETER WITHIN "Z" TIR.

2. SHANK SHALL BE STRAIGHT WITHIN .003 TIR PER INCH OF LENGTH.

3. BEARING SURFACE OF HEAD SHALL BE SQUARE TO SHANK WITHIN .003 TIR.

4. SURFACE ROUGHNESS PER ANSI 846.1. HEAD BEARING SURFACE, HEAD TO SHANK FILLET RADIUS, SHANK AND ALL THREAD ELEMENTS 32 MAX RHR. ALL OTHER SURFACES 125 MAX RHR.

5. REMOVE ALL BURRS, SHARP EDGES AND SLIVERS WHICH MIGHT BECOME DISLODGED UNDER USAGE.

6. DIMENSIONS IN INCHES.

7. TOLERANCE ON ANGLES: ±5º.

CODE IDENT. NO. 92215

APPROVED DATE 26 SEPTEMBER 1974

REV. LETTER AND DATE (A) A OCTOBER 1974

TITLE
BOLT - 12 POINT, EXTERNAL WRENCHING,
ALLOY STEEL
180,000 PSI MIN. UTS

STANDARD

VS 3125

SHEET 1 OF 1.

VSE601-34B

THIS DRAWING IS THE PROPERTY OF VSI CORPORATION. IT IS ISSUED FOR A PARTICULAR LIMITED PURPOSE. IT CONTAINS INFORMATION PROPRIETARY TO VSI CORPORATION. WHEN THE PURPOSE FOR WHICH IT HAS BEEN ISSUED HAS BEEN FULFILLED, THIS DRAWING SHOULD BE RETURNED TO VSI CORPORATION OR DESTROYED. AND ALL RIGHTS OF REPRODUCTION ARE RESERVED BY VSI CORPORATION.

Fairchild Fasteners

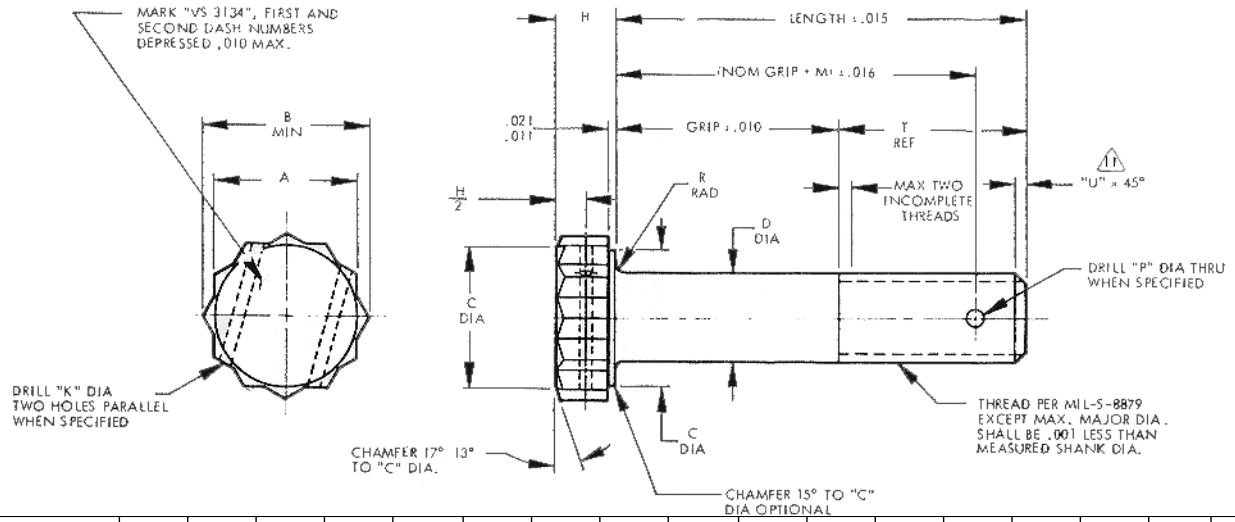

FIRST DASH NO.	THREAD	A	B MIN	C DIA MIN	D DIA		H	K	M 9		P DIA 9	R RAD	T REF	U REF	X	Y			
-3	.1900-32UNJF-3A	.376 .367	.419	.359	.1894 .1885		.150 .130	.056	.109		.080 .070	.029 .009	.236	.03	.005	.0045			
-4	.2500-28UNJF-3A	.439 .430	.491	.422	.2495 .2485		.174 .154	.056 .046	.168		.086 .076	.041 .021	.359	.04	.006	.0045			
-5	.3125-24UNJF-3A	.502 .492	.561	.484	.3120 3110		.197 .177	.080 .070	.240		.086 .076	.041 .021	.359	.04	.006	.0045			
-6	.3750-24UNJF-3A	.564 .553	.631	.546	.3746 .3735		.220 .200	.080 .070	.286		.116 .106	.047 .027	.419	.04	.008	.0045			
-7	.4375-20UNJF-3A	.689 .678	.775	.671	.4370 .4360		.267 .247	.080 .070	.370		.116 .106	.053 .033	.495	.05	.009	.0060			
-8	.5000-20UNJF-3A	.752 .741	.846	.734	.4995 .4985		.291 .271	.080 .070	.421		.116 .106	.060 .040	.561	.05	.010	.0060			
-9	.5625-18UNJF-3A	.877 .865	.987	.859	.5615 .5605		.338 .318	.080 .070	.523		.151 .141	.066 .046	.642	.05	.011	.0060			
-10	.6250-18UNJF-3A	.940 .928	1.059	.922	.6240 .6230		.360 .340	.080 .070	.598		.151 .141	.072 .052	.717	.05	.012	.0060			
-12	.7500-16UNJF-3A	1.064 1.052	1,200	1.031	.7490 .7480		.410 .390	.080 .070	.931		.151 .141	.085 .065	1.059	.09	.014	.0060			
-14	.8750-14UNJF-3A	1.252 1.239	1.414	1.218	.8740 .8730		.478 .458	.080 .070	1.136		.151 .141	.098 .078	1.270	.10	.016	.0090			
-16	1.0000-12UNJF-3A	1.440 1.427	1.628	1.406	.9990 .9980		.549 .529	.080 .070	1.357		.151 .141	.110 .090	1.496	.10	.020	.0090			

PROCUREMENT SPEC: VSM 1573, TYPE D.

MATERIAL: ALLOY STEEL PER AMS 6487.

HEAT TREAT: 156,000 PSI MINIMUM SHEAR STRENGTH

FINISH: DIFFUSED NICKEL - CADMIUM PLATE PER AMS2416 WITH SUPPLEMENTARY CHROMATE TREATMENT (900° F).

PART CODE & EXAMPLE VS3134 -8 12

- 12 — DESIGNATES NOMINAL GRIP IN 16THS.
- CODE LETTER "H" DESIGNATES DRILLED HEAD.
  CODE LETTER "D" DESIGNATES DRILLED SHANK.
- -8 — DESIGNATES NOM DIA IN 16THS.
- VS3134 — VOI-SHAN BASIC PART NUMBER

GENERAL NOTES:

1. REMOVE ALL BURRS AND SHARP EDGES.
2. "C" DIAMETER SHALL BE CONCENTRIC TO SHANK WITHIN "X" TIR.
3. SHANK DIAMETER SHALL BE CONCENTRIC TO THREAD PITCH DIAMETER WITHIN "Y" TIR.
4. HEAD BEARING SURFACE SHALL BE SQUARE TO SHANK WITHIN .003 TIR.
5. HEAD BEARING SURFACE DIAMETER "C" SHALL NOT EXCEED ACTUAL ACROSS FLATS DIMENSION. MIN. AS TABULATED.
6. SURFACE ROUGHNESS PER ANSI 846.1. HEAD BEARING SURFACE, HEAD TO SHANK FILLET RADIUS, SHANK AND ALL THREAD ELEMENTS -32. ALL OTHER SURFACES -125.
7. COTTER PIN HOLE SHALL BE WITHIN .010 AND NORMAL WITHIN 2° OF BOLT CENTERLINE.
8. DIMENSIONS IN INCHES AND SHALL BE MET AFTER PLATING.
9. DUE TO SPACE LIMITATIONS, COTTER PIN HOLE IS NOT RECOMMENDED FOR .190 AND .250 DIAMETERS.
10. FATIGUE REQUIREMENTS NOT APPLICABLE ON DRILLED PARTS.
11. CHAMFER PLUS INCOMPLETE THREAD NOT TO EXCEED TWO PITCHES.

CODE IDENT. NO. 92215

APPROVED DATE 11 DECEMBER 1974

REV. LETTER AND DATE A 15 OCTOBER 1975

TITLE

BOLT - 12-POINT EXTERNAL WRENCHING
900°F
210,000 PSI UTS

STANDARD

VS 3134

SHEET 1 OF 1

VSE601-34B

THIS DRAWING IS THE PROPERTY OF VSI CORPORATION. IT IS ISSUED FOR A PARTICULAR LIMITIED PURPOSE. IT CONTAINS INFORMATION PROPRIETARY TO VSI CORPORATION. WHEN THE PURPOSE FOR WHICH IT HAS BEEN ISSUED HAS BEEN FULFILLED, THIS DRAWING SHOULD BE RETURNED TO VSI CORPORATION OR DESTROYED. AND ALL RIGHTS OF REPRODUCTION ARE RESERVED BY VSI CORPORATION.

Fairchild Fasteners

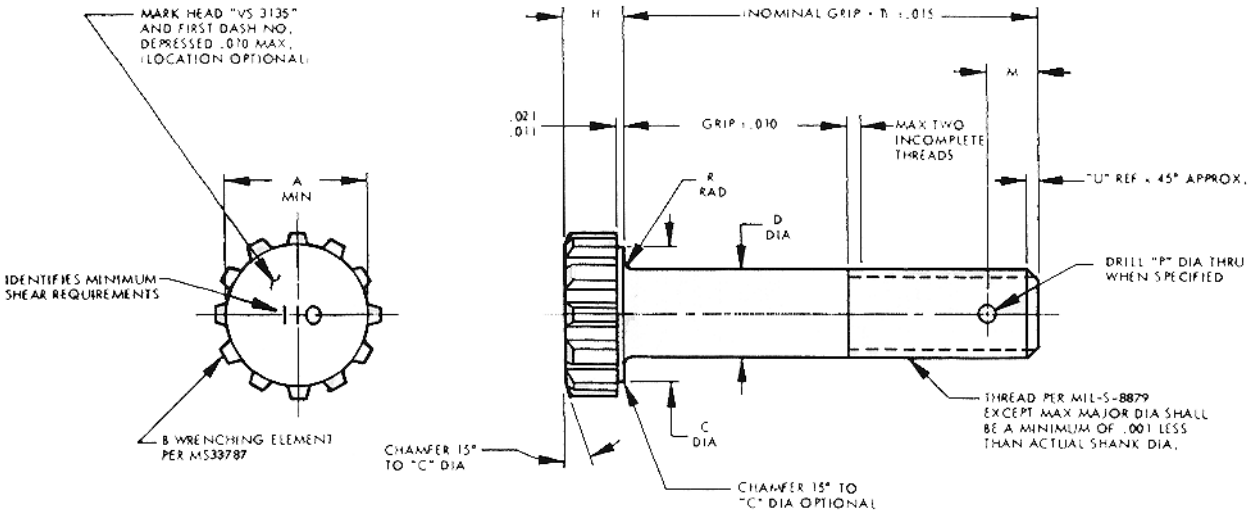

FIRST DASH NO.	THREAD	A MIN	B WRENCH ELEMENT NUMBER	C DIA	D DIA		H		M		P DIA		R RAD		T BASIC		U REF	X TIR ⚠1	Y TIR ⚠1
-3	.1900-32UNJF-3A	.381	12	.380 .359	.1895 .1890		.150 .130		.114 .094		.080 .070		.029 .009		.323		.039	.004	.0045
-4	.2500-28UNJF-3A	.447	14	.446 .422	.2495 .2490		.174 .154		.161 .141		.066 .076		.035 .015		.370		.045	.005	.0045
-5	.3125-24UNJF-3A	.512	16	.511 .484	.3120 .3115		.197 .177		.229 .209		.086 .076		.041 .021		.438		.052	.006	.0045
-6	.3750-24UNJF-3A	.575	18	.574 .546	.3745 .3740		.220 .200		.222 .202		.116 .106		.047 .027		.454		.052	.008	.0045
-7	.4375-20UNJF-3A	.707	22	.703 .671	.4370 .4365		.267 .247		.296 .276		.116 .106		.053 .033		.528		.062	.009	.0060
-8	.5000-20UNJF-3A	.772	24	.766 .734	.4995 .4990		.291 .271		.265 .245		.116 .106		.060 .040		.528		.062	.010	.0060
-9	.5625-18UNJF-3A	.901	28	.891 .859	.5615 .5610		.338 .318		.276 .256		.151 .141		.066 .046		.594		.069	.011	.0060
-10	.6250-18UNJF-3A	.967	30	.954 .922	.6240 .6230		.360 .340		.308 .288		.151 .141		.072 .052		.626		.069	.012	.0060
-12	.7500-16UNJF-3A	1.096	34	1.063 1.031	.7490 .7480		.410 .390		.286 .266		.146 .140		.085 .065		.666		.078	.015	.0060
-14	.8750-14UNJF-3A	1.291	40	1.250 1.218	.8740 .8730		.478 .458		.341 .321		.146 .140		.098 .078		.749		.089	.018	.0090
-16	1.0000-12UNJF-3A	1.487	46	1.438 1.406	.9990 .9980		.549 .529		.390 .370		.146 .140		.110 .090		.895		.104	.020	.0090

PROCUREMENT SPEC: VSM 1666, TYPE B.

FINISH: PASSIVATE PER QQ-P-35.

PART CODE & EXAMPLE: VS3125 -8 12 D

- D — DESIGNATES DRILLED SHANK (WHEN SPECIFIED).
- 12 — DESIGNATES NOMINAL GRIP IN 16THS.
- -8 — DESIGNATES NOM DIA IN 16THS.
- VS3125 — VOI-SHAN BASIC PART NUMBER.

GENERAL NOTES:

⚠1 CONCENTRICITY: WRENCHING ELEMENT TO SHANK WITHIN "X" TIR. SHANK DIAMETER TO THREAD PITCH DIAMETER WITHIN "Y" TIR.

2. HEAD BEARING SURFACE SHALL BE SQUARE TO SHANK WITHIN .003 TIR.
3. HEAD BEARING SURFACE DIAMETER "C" SHALL NOT EXCEED ACTUAL ACROSS FLATS DIMENSION.
4. SURFACE ROUGHNESS PER ANSI B46.1. HEAD BEARING SURFACE, HEAD TO SHANK FILLET RADIUS, SHANK AND ALL THREAD ELEMENTS 32 MAX RHR. ALL OTHER SURFACES 125 MAX RHR.
5. COTTER PIN HOLE SHALL BE WITHIN .010 AND NORMAL WITHIN 2° OF BOLT CENTERLINE.
6. DIMENSIONS IN INCHES.

THIS DRAWING IS THE PROPERTY OF VSI CORPORATION. IT IS ISSUED FOR A PARTICULAR LIMITED PURPOSE. IT CONTAINS INFORMATION PROPRIETARY TO VSI CORPORATION. WHEN THE PURPOSE FOR WHICH IT HAS BEEN ISSUED HAS BEEN FULFILLED, THIS DRAWING SHOULD BE RETURNED TO VSI CORPORATION OR DESTROYED. AND ALL RIGHTS OF REPRODUCTION ARE RESERVED BY VSI CORPORATION.

		CODE IDENT. NO. 92215
APPROVED DATE 11 DECEMBER 1974	TITLE BOLT, SPLINE, SHEAR HEAD	STANDARD
B REV. LETTER AND DATE 22 APRIL 1975		VS 3135 SHEET 1 OF 1

VSE601-34B

Fairchild Fasteners

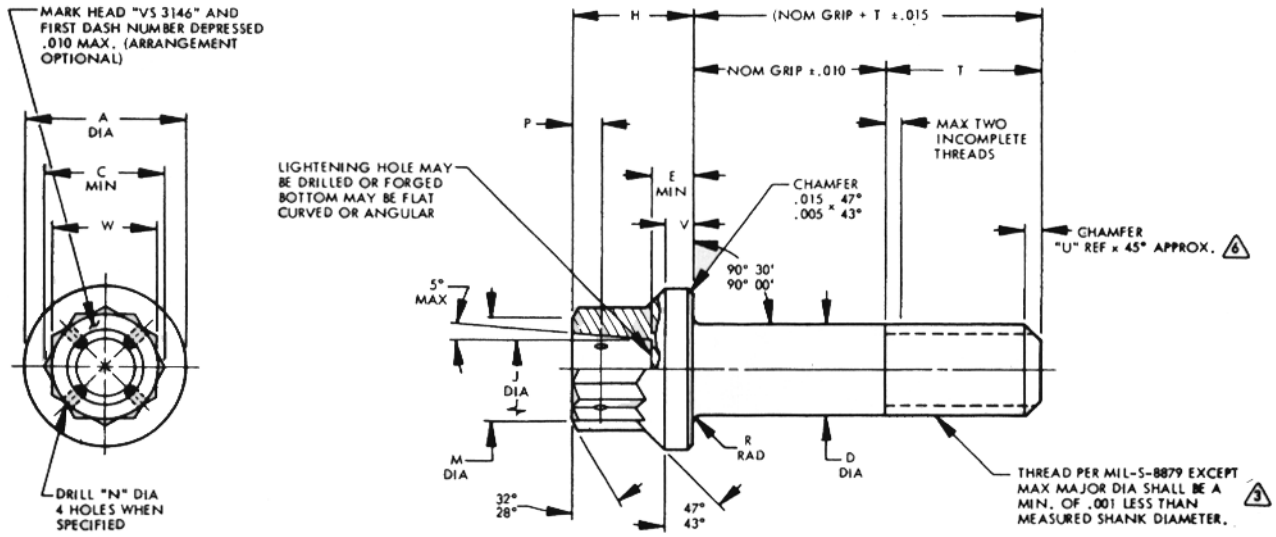

FIRST DASH NO.	THREAD	A DIA		C MIN	D DIA	E MIN			H	J DIA		M DIA	N DIA	P	R RAD 3		T BASIC	U REF	V	W	X TIR 1	Y TIR 1	Z TIR 1
-3	.1900-32UNJF-3A	.369 .359		.277	.1895 .1890	.092			.224 .204	.135 .095		.250 .235	.042 .032	.072 .052	.041 .031		.390	.039	.060 .040	.251 .243	.005	.004	.0045
-4	.2500-28UNJF-3A	.475 .465		.347	.2495 .2490	.135			.264 .244	.190 .095		.312 .297	.042 .032	.072 .052	.041 .031		.500	.045	.052 .032	.313 .304	.005	.004	.0045
-5	.3125-24UNJF-3A	.585 .575		.419	.3120 .3115	.162			.329 .309	.225 .185		.375 .360	.060 .050	.080 .060	.041 .031		.593	.052	.060 .040	.376 .367	.006	.005	.0045
-6	.3750-24UNJF-3A	.649 .639		.491	.3745 .3740	.197			.398 .378	.270 .230		.437 .422	.060 .050	.080 .060	.057 .047		.688	.052	.101 .081	.439 .430	.008	.006	.0045
-7	.4375-20UNJF-3A	.750 .740		.561	.4370 .4365	.228			.445 .425	.330 .290		.500 .485	.060 .050	,080 .060	.057 .047		.813	.063	.109 .089	.502 .492	.009	.008	.0060
-8	.5000-20UNJF-3A	.828 .818		.637	.4995 .4990	.254			.514 .494	.390 .350		.562 .547	.060 .050	.104 .084	.057 .047		.906	.063	.133 .113	.564 .553	.010	.008	.0060
-9	.5625-18UNJF-3A	.938 .928		.703	.5615 .5610	.287			.567 .547	.450 .410		.625 .610	.060 .050	.104 .084	.057 .047		1.000	.069	.143 .123	.627 .616	.011	.009	.0060
-10	.6250-18UNJF-3A	1.050 1.040		.775	.6240 .6230	.327			.628 .608	.510 .470		.687 .672	.060 .050	.104 .084	.073 .063		1.125	.069	.160 .140	.690 .679	.012	.010	.0060
-12	.7500-16UNJF-3A	1.230 1.220		.917	.7490 .7485	.380			.721 .701	.580 .540		.812 .797	.060 .050	.104 .084	.073 .063		1.281	.078	.188 .168	.814 .803	.015	.012	.0090
-14	.8750-14UNJF-3A	1.438 1.428		1.059	.8740 .8735	.438			.818 .798	.660 .620		.937 .922	.060 .050	.135 .115	.073 .063		1.500	.089	.208 .188	.940 .928	.018	.014	.0090
-16	1.0000-12UNJF-3A	1.625 1.615		1.200	.9990 .9985	.493			.933 .913	.750 .710		1.062 1.047	.060 .050	.135 .115	.073 .063		1.688	.104	.232 .212	1.064 1.052	.020	.016	.0090
-18	1.1250-12UNJF-3A	1.875 1.865		1.414	1.1240 1.1230	.556			1.061 1.041	.850 .810		1.250 1.235	.060 .050	.135 .115	.073 .063		1.937	.104	.268 .248	1.252 1.239	.022	.019	.0090
-20	1.2500-12UNJF-3A	2.125 2.115		1.484	1.2490 1.2480	.636			1.165 1.145	.960 .920		1.312 1.297	.060 .050	.135 .115	.089 .077		2.094	.104	.279 .259	1.314 1.301	.025	.021	.0090
-22	1.3750-12UNJF-3A	2.313 2.303		1.628	1.3740 1.3730	.698			1.276 1.256	1.080 1.040		1.437 1.422	.060 .050	.198 .178	.089 .077		2.281	.104	.284 .264	1.440 1.427	.028	,021	.0120
-24	1.5000-12UNJF-3A	2.500 2.490		1.842	1.4990 1.4980	.750			1.444 1.424	1.210 1.170		1.625 1.610	.060 .050	.198 .178	.089 .077		2.468	.104	.345 .325	1.627 1.614	.030	.023	.0120

PROCUREMENT SPEC: VS-22-0-2 EXCEPT ROCKWELL AND MAGNETIC PARTICLE INSPECTION NOT APPLICABLE; AND LOADING PER TABLE II.

MATERIAL: INCONEL 718 PER AMS 5662 (CHEMISTRY).

HEAT TREAT: 220,000 PSI MINIMUM ULTIMATE TENSILE STRENGTH.

FINISH: PASSIVATE PER QQ-P-35.

PART CODE & EXAMPLE: VS3146 -4 -8

- -8 — NOMINAL GRIP LENGTH IN 16THS
- -4 — LETTER "H" IN LIEU OF (-) DESIGNATES DRILLED HEAD
- VS3146 — NOMINAL DIAMETER IN 16THS
- VS3146 — BASIC PART NUMBER

GENERAL NOTES:

1. CONCENTRICITY: "A", "D" AND "J" DIAMETERS WITHIN "X" TIR. "W" TO "J" DIAMETER WITHIN "Y" TIR. "D" DIA TO THREAD PITCH DIA WITHIN "Z" TIR.
2. SHANK TO BE STRAIGHT WITHIN .003 PER INCH OF LENGTH FOR -3 THROUGH -5; .0025 PER INCH OF LENGTH FOR -6 AND -7; .002 PER INCH OF LENGTH FOR -8 AND LARGER.
3. HEAD TO SHANK FILLET READIUS AND THREADS TO BE ROLLED AFTER HEAT TREAT.
4. 100% FLOURESCENT PENETRANT INSPECT PER MIL-1-6866.
5. SURFACE ROUGHNESS PER ANSI 846.1. BEARING SURFACE OF HEAD, HEAD TO SHANK FILLET RADIUS, SHANK AND ALL THREAD ELEMENTS 32 RHR MAX. ALL OTHER SURFACES 125 RHR MAX.
6. CHAMFER U PLUS INCOMPLETE THREADS NOT TO EXCEED 2 PITHCES.
7. FATIGUE LOADING PER TABLE II WITH A MINIMUM 65,000 CYCLE LIFE, TESTING TO BE DISCONTINUED AT 130,000 CYCLES. AVERAGE CYCLES NOT APPLICABLE.
8. REMOVE ALL BURRS.
9. DIMENSIONS IN INCHES TO BE MET AFTER FINISH.

THIS DRAWING IS THE PROPERTY OF VSI CORPORATION. IT IS ISSUED FOR A PARTICULAR LIMITIED PURPOSE. IT CONTAINS INFORMATION PROPRIETARY TO VSI CORPORATION. WHEN THE PURPOSE FOR WHICH IT HAS BEEN ISSUED HAS BEEN FULFILLED, THIS DRAWING SHOULD BE RETURNED TO VSI CORPORATION OR DESTROYED. AND ALL RIGHTS OF REPRODUCTION ARE RESERVED BY VSI CORPORATION.

		CODE IDENT. NO. 92215
APPROVED DATE 14 JULY 1975	TITLE BOLT, 12-POINT TENSION HEAD EXTERNAL WRENCHING INCO 718 220 KSI MIN UTS	STANDARD
REV. LETTER AND DATE A 26 JANUARY 1976		VS 3146 SHEET 1 OF 2

VSE601-34B

Fairchild Fasteners

TABLE II

FIRST DASH NUMBER	TENSILE (LBS. MIN.)	DOUBLE SHEAR (LBS. MIN.)	FATIGUE LOADING 7	
			HIGH :2%	LOW :2%
-3	4,970	7,300	2,580	258
-4	8,890	12,700	4,620	462
-5	14,100	19,900	7,330	733
-6	20,900	28,700	10,900	1,090
-7	28,300	39,000	14,700	1,470
-8	37,800	51,000	19,600	1,960
-9	47,900	64,600	24,900	2,490
-10	59,900	79,700	31,200	3,120
-12	87,000	114,800	45,200	4,520
-14	119,000	156,300	61,700	6,170
-16	155,000	204,200	80,400	8,040
-18	198,000	258,400	103,000	10,300
-20	247,000	319,200	128,000	12,800
-22	301,000	386,200	157,000	15,700
-24	361,000	460,000	188,000	18,800

THIS DRAWING IS THE PROPERTY OF VSI CORPORATION. IT IS ISSUED FOR A PARTICULAR LIMITIED PURPOSE. IT CONTAINS INFORMATION PROPRIETARY TO VSI CORPORATION. WHEN THE PURPOSE FOR WHICH IT HAS BEEN ISSUED HAS BEEN FULFILLED, THIS DRAWING SHOULD BE RETURNED TO VSI CORPORATION OR DESTROYED. AND ALL RIGHTS OF REPRODUCTION ARE RESERVED BY VSI CORPORATION.

		CODE IDENT. NO. 92215
APPROVED DATE 14 JULY 1975	TITLE BOLT, 12-POINT TENSION HEAD EXTERNAL WRENCHING INCO 718 220 KSI MIN UTS	STANDARD
REV. LETTER AND DATE A 26 JANUARY 1976		VS 3146 SHEET 2 OF 2

VSE601-34B

Fairchild Fasteners

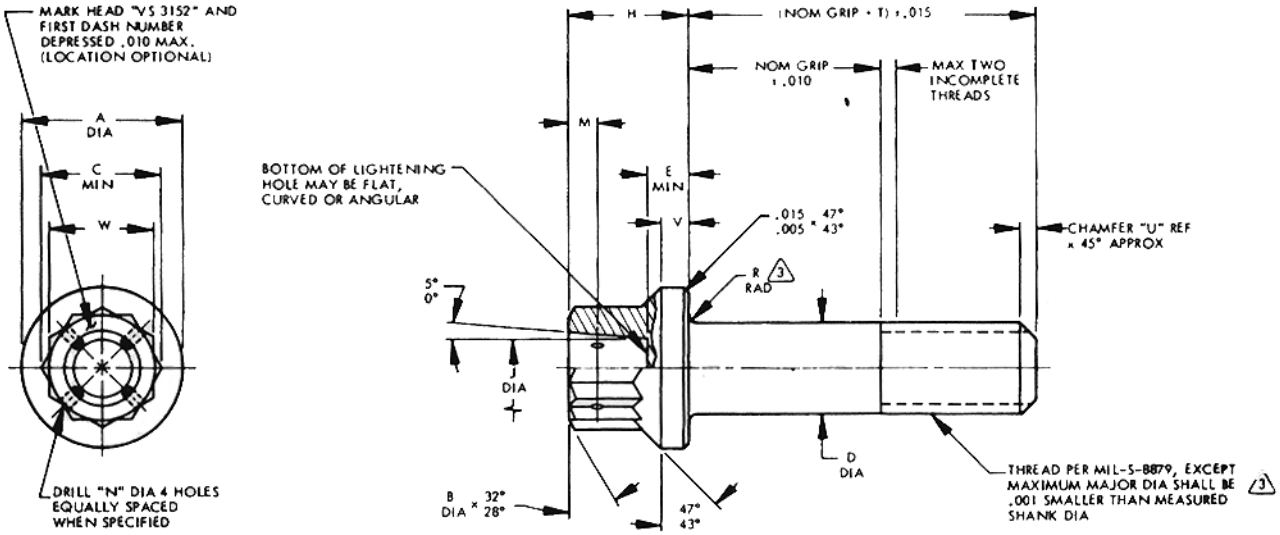

FIRST DASH NO.	THREAD	A DIA	B DIA	C MIN	D DIA	E MIN		H	J DIA		M	N DIA	R RAD	T BASIC	U REF	V	W				CONCENTRICITY 1		
																					X	Y	Z
-3	.1900-32UNJF-3A	.369 .359	.250 .235	.277	.1895 .1885	.098		.224 .204	.166 .126		.072 .052	.042 .032	.041 .031	.390	.039	.050 .030	.251 .243				.005	.004	.0045
-4	.2500-28UNJF-3A	.475 .465	.312 .297	.347	.2495 .2485	.135		.264 .244	.190 .150		.072 .052	.042 .032	.041 .031	.500	.045	.052 .032	.313 .304				.005	.004	.0045
-5	.3125-24UNJF-3A	.585 .575	.375 .360	.419	.3120 .3110	.162		.329 .309	.225 .185		.080 .060	.060 .050	.041 .031	.593	.052	.060 .040	.376 .367				.006	.005	.0045
-6	.3750-24UNJF-3A	.725 .715	.500 .485	.561	.3745 .3735	.197		.415 .395	.307 .267		.080 .060	.060 .050	.057 .047	.688	.052	.085 .065	.502 .492				.008	.006	.0045
-7	.4375-20UNJF-3A	.830 .820	.562 .547	.631	.4370 .4360	.228		.474 .454	.330 .290		.080 .060	.060 .050	.057 .047	.813	.062	.093 .073	.564 .553				.009	.008	.0060
-8	.5000-20UNJF-3A	.950 .940	.625 .610	.703	.4995 .4985	.254		.540 .520	.390 .350		.104 .084	.060 .050	.057 .047	.906	.062	.108 .088	.627 .616				.010	.008	.0060
-9	.5625-18UNJF-3A	1.055 1.045	.750 .735	.846	.5615 .5605	.287		.610 .590	.450 .410		.104 .084	.060 .050	.057 .047	1.000	.069	.128 .108	.752 .741				.011	.009	.0060
-10	.6250-18UNJF-3A	1.195 1.185	.812 .797	.917	.6240 .6230	.327		.683 .663	.479 .439		.104 .084	.060 .050	.073 .063	1.125	.069	.135 .115	.814 .803				.012	.010	.0060
-12	.7500-16UNJF-3A	1.425 1.415	.937 .922	1.059	.7490 .7480	.380		.816 .796	.580 .540		.104 .084	.060 .050	.073 .063	1.281	.078	.162 .142	.940 .928				.015	.012	.0060

PROCUREMENT SPEC: VSM 1660 EXCEPT MATERIAL AS SHOWN AND MECHANICAL PROPERTIES PER TABLE II.

MATERIAL: INCONEL 718 PER AMS 5662 (CHEMISTRY)

HEAT TREAT: 220,000/240,000 PSI ULTIMATE TENSILE STRENGTH AND 125 KSI MIN SHEAR

FINISH: PASSIVATE PER QQ-P-35.

PART CODE & EXAMPLE: VS3152 -4 H 8

- 8 — NOMINAL GRIP LENGTH IN 16THS
- H — DASH (-) DESIGNATES UNDRILLED HEAD; LETTER "H" DESIGNATES DRILLED HEAD
- -4 — NOMINAL DIAMETER IN 16THS
- VS3152 — BASIC PART NUMBER

GENERAL NOTES:

1. CONCENTRICITY: "A", "D" AND "J" DIAMETERS WITHIN "X" TIR. "W" TO "J" DIAMETER WITHIN "Y" TIR. "D" DIA TO THREAD PITCH DIA WITHIN "Z" TIR.
2. SHANK TO BE STRAIGHT WITHIN .003 PER INCH OF LENGTH.
3. HEAD TO SHANK FILLET RADIUS AND THREADS TO BE ROLLED AFTER HEAT TREAT.
4. 100% FLUORESCENT PENETRANT INSPECT PER MIL-1-6866.
5. SURFACE ROUGHNESS PER ANSI 846 .1. BEARING SURFACE OF HEAD, HEAD TO SHANK FILLET RADIUS, SHANK AND ALL THREAD ELEMENTS 32 RHR MAX. ALL OTHER SURFACES 125 RHR MAX.
6. REMOVE ALL BURRS.
7. DIMENSIONS IN INCHES TO BE MET AFTER FINISH.
8. FATIGUE LOADING PER TABLE II WITH A MINIMUM 45,000 CYCLE LIFE, TESTING TO BE DISCONTINUED AT 130,000 CYCLES; AVERAGE CYCLES TO EXCEED 65,000.

CODE IDENT. NO. 92215

APPROVED DATE 16 OCTOBER 1975

REV. LETTER AND DATE D 27 SEPTEMBER 1976

TITLE

BOLT, 12-POINT TENSION HEAD
EXTERNAL WRENCHING
INCO 718
220/240 KSI TENSILE
125 KSI MIN SHEAR
900°F

STANDARD

VS 3152

SHEET 1 OF 2

VSE601-34B

THIS DRAWING IS THE PROPERTY OF VSI CORPORATION. IT IS ISSUED FOR A PARTICULAR LIMITED PURPOSE. IT CONTAINS INFORMATION PROPRIETARY TO VSI CORPORATION. WHEN THE PURPOSE FOR WHICH IT HAS BEEN ISSUED HAS BEEN FULFILLED, THIS DRAWING SHOULD BE RETURNED TO VSI CORPORATION OR DESTROYED. AND ALL RIGHTS OF REPRODUCTION ARE RESERVED BY VSI CORPORATION.

Fairchild Fasteners

TABLE II

FIRST DASH NUMBER	TENSILE (LBS.) 9		DOUBLE SHEAR (LBS. MIN.)	FATIGUE LOADING 8		
	MINIMUM	MAXIMUM		HIGH :2%	LOW :2%	
-3	4,770	5,420	7,090	2,480	248	
-4	8,540	9,650	12,300	4,440	444	
-5	13,500	15,300	19,200	7,020	702	
-6	20,900	22,800	27,600	10,900	1,090	
-7	28,300	30,900	37,600	14,700	1,470	
-8	37,800	41,200	49,100	19,600	1,960	
-9	47,900	52,200	62,100	24,900	2,490	
-10	59,900	65,400	76,700	31,200	3,120	
-12	87,000	94,850	110,000	45,200	4,520	

GENERAL NOTES CONT.:

9. CONFORMANCE TO MAXIMUM RENSILE LIMIT MAY BE DETERMINED BY TEST OF A REDUCED SHANK, PREPARED FROM A FINISHED BOLT.

10. THIS IS A ROHR INDUSTRIES CONTROLLED DRAWING. ANY CHANGES MUST BE COORDINATED AND APPROVED PRIOR TO REVISION.

11. QUALITY ASSURANCE TESTING OF FIRST PRODUCTION ORDER TO BE WITNESSED BY ROHR.

THIS DRAWING IS THE PROPERTY OF VSI CORPORATION. IT IS ISSUED FOR A PARTICULAR LIMITIED PURPOSE. IT CONTAINS INFORMATION PROPRIETARY TO VSI CORPORATION. WHEN THE PURPOSE FOR WHICH IT HAS BEEN ISSUED HAS BEEN FULFILLED, THIS DRAWING SHOULD BE RETURNED TO VSI CORPORATION OR DESTROYED. AND ALL RIGHTS OF REPRODUCTION ARE RESERVED BY VSI CORPORATION.

		CODE IDENT. NO. 92215
APPROVED DATE 16 OCTOBER 1975	TITLE BOLT, 12-POINT TENSION HEAD EXTERNAL WRENCHING INCO 718 220/240 KSI TENSILE 125 KSI MIN SHEAR 900°F	STANDARD
D REV. LETTER AND DATE 27 SEPTEMBER 1976		VS 3152
		SHEET 2 OF 2

VSE601-34B

Fairchild Fasteners

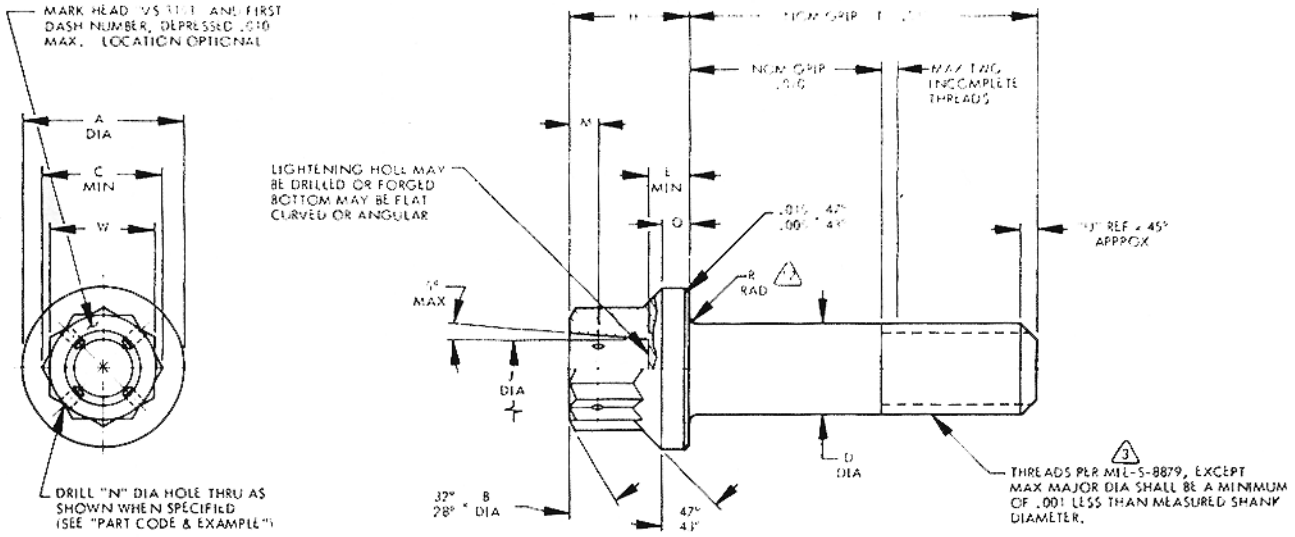

FIRST DASH NO.	THREAD	A DIA	B DIA	C MIN	D DIA		E MIN	H	J DIA	M	N DIA	O	R RAD 2	T BASIC	U REF	W	X TIR 1	Y TIR 1	Z TIR 1				
-3	.1900-32UNJF-3A	.350 .340	.250 .235	.277	.1895 .1885		.092	.285 .265	.135 .095	.072 .052	.042 .032	.074 .054	.041 .031	.334	.039	.251 .243	.005	.004	.0045				
-4	.2500-28UNJF-3A	.438 .428	.312 .297	.347	.2495 .2485		.135	.310 .290	.190 .150	.072 .052	.042 .032	.079 .059	.041 .031	.412	.045	.313 .304	.005	.004	.0045				
-5	.3125-24UNJF-3A	.531 .521	.375 .360	.418	.3120 .3110		.162	.358 .338	.225 .185	.080 .060	.060 .050	.092 .072	.041 .031	.480	.052	.376 .367	.006	.005	.0045				
-6	.3750-24UNJF-3A	.649 .639	.437 .422	.490	.3745 .3735		.197	.198 .178	.270 .230	.080 .060	.060 .050	.101 .081	.057 .047	.560	.052	.439 .430	.008	.006	.0045				
-7	.4375-20UNJF-3A	.750 .740	.500 .485	.561	.4370 .4360		.228	.445 .425	.330 .290	.080 .060	.060 .050	.109 .089	.057 .047	.665	.063	.502 .492	.009	.008	.0060				
-8	.5000-20UNJF-3A	.828 .818	.562 .547	.610	.4995 .4985		.254	.514 .494	.390 .350	.104 .084	.060 .050	.133 .113	.057 .047	.761	.063	.564 .553	.010	.008	.0060				
-9	.5625-18UNJF-3A	.938 .928	.625 .610	.702	.5615 .5605		.287	.567 .547	.450 .410	.104 .084	.060 .050	.143 .123	.057 .047	.828	.069	.627 .616	.011	.009	.0060				
-10	.6250-18UNJF-3A	1.050 1.040	.687 .672	.774	.6240 .6230		.327	.628 .608	.510 .470	.104 .084	.060 .050	.160 .140	.073 .063	.868	.069	.690 .679	.012	.010	.0060				
-12	.7500-16UNJF-3A	1.230 1.220	.812 .797	.915	.7490 .7480		.380	.721 .701	.580 .540	.104 .084	.060 .050	.188 .168	.073 .063	1.009	.078	.814 .803	.015	.012	.0060				
-14	.8750-14UNJF-3A	1.438 1.428	.937 .922	1.057	.8740 .8730		.438	.818 .798	.660 .620	.135 .115	.060 .050	.208 .188	.073 .063	1.175	.089	.940 .928	.018	.014	.0090				
-16	1.000-12UNJF-3A	1.625 1.615	1.062 1.047	1.199	.9990 .9980		.493	.933 .913	.750 .710	.135 .115	.060 .050	.232 .212	.073 .063	1.345	.104	1.064 1.052	.020	.016	.0090				
-16L	1.000-12UNJF-3A	1.625 1.615	1.062 1.047	1.199	.9990 .9980		.493	.933 .913	.750 .710	.135 .115	.060 .050	.232 .212	.073 .063	1.595	.104	1.064 1.052	.020	.016.	.0090				

PROCUREMENT SPEC: VSM 1660, EXCEPT MATERIAL AS SHOWN AND MECHANICAL PROPERTIES PER TABLE II.

MATERIAL: INCONEL 718 PER AMS 5662 (CHEMISTRY)

HEAT TREAT: 220,000 PSI ULTIMATE TENSILE STRENGTH AND 125 KSI MIN SHEAR

FINISH: PASSIVATE PER QQ-P-15.

PART CODE & EXAMPLE: VS3153 -4 H 8

- 8 — NOMINAL GRIP LENGTH IN 16THS
- H — DASH (-) DESIGNATES UNDRILLED HEAD; LETTER "H" DESIGNATES DRILLED HEAD
- -4 — NOMINAL DIAMETER IN 16THS
- VS3153 — BASIC PART NUMBER

GENERAL NOTES:

1. CONCENTRICITY: "A", "D" AND "J" DIAMETERS WITHIN "X" TIR. "W" TO "J" DIAMETER WITHIN "Y" TIR. "D" DIA TO THREAD PITCH DIA WITHIN "Z" TIR.
2. SHANK TO BE STRAIGHT WITHIN .003 PER INCH OF LENGTH.
3. HEAD TO SHANK FILLET RADIUS AND THREADS TO BE ROLLED AFTER HEAT TREAT.
4. 100% FLOURESCENT PENETRANT INSPECT PER MIL-1-6866.
5. SURFACE ROUGHNESS PER ANSI 846.1. HEAD TO SHANK FILLET RADIUS 16 RHR MAX. BEARING SURFACE OF HEAD, SHANK AND ALL THREAD ELEMENTS 32 RHR MAX. ALL OTHER SURFACES 125 RHR MAX.
6. REMOVE ALL BURRS.
7. DIMENSIONS IN INCHES TO BE MET AFTER FINISH.
8. FATIGUE LOADING PER TABLE II WITH A MINIMUM 45,000 CYCLE LIFE. TESTING TO BE DISCONTINUED AT 130,000 CYCLES, AVERAGE CYCLES TO EXCEED 65,000.

CODE IDENT. NO. 92215

APPROVED DATE 16 OCTOBER 1975

REV. LETTER AND DATE F 1 FEBRUARY 1982

TITLE

BOLT, 12-POINT TENSION HEAD
EXTERNAL WRENCHING
INCO 718
220/240 KSI TENSILE
125 KSI MIN SHEAR
900°F

STANDARD

VS 3153

SHEET 1 OF 2

THIS DRAWING IS THE PROPERTY OF VSI CORPORATION. IT IS ISSUED FOR A PARTICULAR LIMITIED PURPOSE. IT CONTAINS INFORMATION PROPRIETARY TO VSI CORPORATION, WHEN THE PURPOSE FOR WHICH IT HAS BEEN ISSUED HAS BEEN FULFILLED, THIS DRAWING SHOULD BE RETURNED TO VSI CORPORATION OR DESTROYED. AND ALL RIGHTS OF REPRODUCTION ARE RESERVED BY VSI CORPORATION.

VSE601-34B

Fairchild Fasteners

TABLE II

FIRST DASH NUMBER	TENSILE (LBS.) 9		DOUBLE SHEAR (LBS. MIN.)	FATIGUE LOADING 8		
	MINIMUM	MAXIMUM		HIGH :2%	LOW :2%	
-3	4,770	5,420	7,090	2,480	248	
-4	8,540	9,650	12,300	4,440	444	
-5	13,500	15,300	19,200	7,020	702	
-6	20,900	22,800	27,600	10,900	1,090	
-7	28,300	30,900	37,600	14,700	1,470	
-8	37,800	41,200	49,100	19,600	1,960	
-9	47,900	52,200	62,100	24,900	2,490	
-10	59,900	65,400	76,700	31,200	3,120	
-12	87,000	94,850	110,000	45,200	4,520	
-14	118,600	129,400	150,000	61,700	6,170	
-16	154,600	168,600	196,000	80,400	8,040	
-16L	154,600	168,600	196,000	80,400	8,040	

GENERAL NOTES CONT.:

9. CONFORMANCE TO MAXIMUM TENSILE LIMIT MAY BE DETERMINED BY A TEST OF A REDUCED SHANK SPECIMEN PREPARED FROM A FINISHED BOLT.

10. THIS IS A ROHR INDUSTRIES CONTROLLED DRAWING. ANY CHANGES MUST BE COORDINATED AND APPROVED PRIOR TO REVISION.

11. QUALITY ASSURANCE TESTING OF FIRST PRODUCTION ORDER TO BE WITNESSED BY ROHR.

12. COLD WORKING OF THE FILLET RADIUS BY ROLLING SHALL RESULT IN A REFLECTIVE METAL SURFACE (MINIUM 16 MICROINCHES PER ANSI 8-46.1) BETWEEN TANGENT POINTS OF THE RADIUS. ADDITIONAL SURFACE CONDITIONING OF THE FILLET RADIUS AFTER ROLLING IS NOT PERMITTED.

THIS DRAWING IS THE PROPERTY OF VSI CORPORATION. IT IS ISSUED FOR A PARTICULAR LIMITIED PURPOSE. IT CONTAINS INFORMATION PROPRIETARY TO VSI CORPORATION, WHEN THE PURPOSE FOR WHICH IT HAS BEEN ISSUED HAS BEEN FULFILLED, THIS DRAWING SHOULD BE RETURNED TO VSI CORPORATION OR DESTROYED. AND ALL RIGHTS OF REPRODUCTION ARE RESERVED BY VSI CORPORATION.

		CODE IDENT. NO. 92215
APPROVED DATE 16 OCTOBER 1975	TITLE BOLT, 12-POINT TENSION HEAD EXTERNAL WRENCHING INCO 718 220/240 KSI TENSILE 125 KSI MIN SHEAR 900°F	STANDARD
REV. LETTER AND DATE F 1 FEBRUARY 1982		VS 3153 SHEET 2 OF 2

VSE601-34B

Fairchild Fasteners

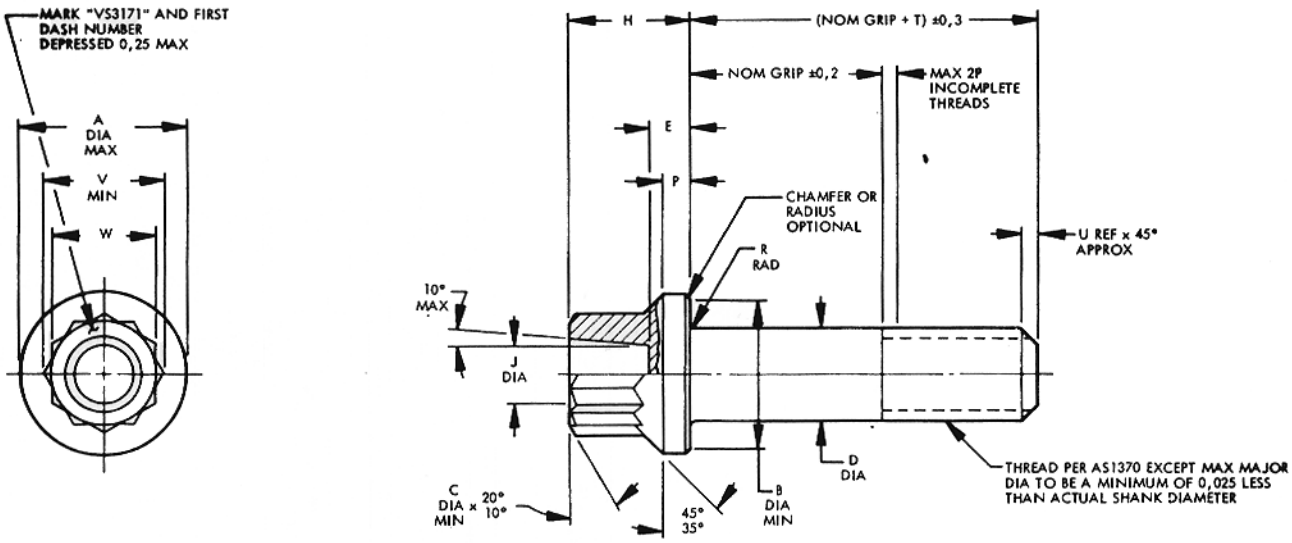

FIRST DASH NO.	THREAD 4h6h	A DIA MAX	B DIA MIN	C DIA MIN	D DIA f7	E	H	J DIA	P	R DIA	T	U REF	V MIN	W	X TIR ⚠1	Y TIR ⚠1		MINIMUM TENSILE LOAD (NEWTONS)	MINIMUM DOUBLE SHEAR LOAD (NEWTONS)	FATIGUE LOADING (NEWTONS)	
																				MAX LOAD	MIN LOAD
6	MJ6 x 1,0	11,8	11,0	7,85	5,990 5,978	4,2 3,8	8,19 7,61	4,2 3,2	1,95 1,70	1,0 0,8	14,0	1,25	8,91	8,00 7,86	0,15	0,12		31 500	43 000	16 400	1 640
7	MJ7 x 1,0	13,3	12,5	8,85	6,987 6,972	4,6 4,2	8,89 8,31	4,9 3,9	2,15 1,90	1,0 0,8	15,0	1,25	10,04	9,00 8,85	0,18	0,15		44 400	58 500	23 100	2 310
8	MJ8 x 1,0	14,8	14,0	9,85	7,987 7,972	5,0 4,6	9,69 9,11	5,5 4,5	2,35 2,10	1,0 0,8	16,5	1,25	11,18	10,00 9,85	0,20	0,15		59 400	76 400	30 900	3 090
10	MJ10 X 1,25	18,4	17,4	11,82	9,987 9,972	5,9 5,5	11,25 10,55	7,1 6,1	2,75 2,5	1,2 1,0	20,5	1,56	13,42	12,00 11,82	0,25	0,15		92 800	119 300	48 300	4 830
12	MJ12 X 1,25	21,5	20,4	13,73	11,984 11,996	6,8 6,4	12,75 12,05	8,7 7,7	3,15 2,90	1,4 1,2	22,5	1,56	15,65	14,00 13,73	0,30	0,18		138 000	171 700	71 800	7 180
14	MJ14 X 1,5	24,9	23,9	16,73	13,984 13,966	7,5 7,1	14,25 13,55	11,3 10,3	3,55 3,30	1,4 1,2	25,0	1,88	19,07	17,00 16,73	0,35	0,18		187 000	234 000	97 200	9 720
16	MJ16 X 1,5	28,5	27,4	18,67	15,984 15,966	8,4 8,0	15,55 14,85	12,9 11,9	3,95 3,70	1,8 1,6	28,5	1,88	21,28	19,00 18,67	0,40	0,18		248 000	305 500	129 000	12 900
18	MJ18 X 1,5	31,5	30,4	21,67	17,984 17,966	9,1 8,7	16,85 16,15	15,5 14,5	4,35 4,10	1,8 1,6	31,0	1,88	24,70	22,00 21,67	0,45	0,18		319 000	386 000	166 000	16 600
20	MJ20 X 1,5	34,5	33,4	23,67	19,980 19,959	10,0 9,6	18,35 17,65	17,0 16,0	4,75 4,50	1,8 1,6	33,5	1,88	26,98	24,00 23,67	0,50	0,21		398 000	477 300	207 000	20 700

PROCUREMENT SPEC: VSM 1660, EXCEPT MECHANICAL PROPERTIES AS TABULATED.

MATERIAL: A-286 CRES, CHEMISTRY PER AMS5732.

HEAT TREAT: 1400 MPA MINIMUM ULTIMATE TENSILE STRENGTH.

FINISH: PASSIVATE PER QQ-P-35.

PART CODE & EXAMPLE: VS3171 -8 -10

- -10: NOMINAL GRIP IN MILLIMETERS ⚠4
- -8: NOMINAL DIAMETER IN MILLIMETERS
- VS3171: BASIC PART NUMBER

GENERAL NOTES:

⚠1 CONCENTRICITY: "A" AND "D" DIAMETERS WITHIN "X" TIR.
"D" DIAMETER AND THREAD PITCH DIAMETER WITHIN "Y" TIR.

2. HEAD BEARING FACE SHALL BE SQUARE WITH SHANK WITHIN 0,08 mm TIR.
3. SURFACE ROUGHNESS PER ISO 1302-19/4(E). HEAD BEARING FACE, HEAD TO SHANK FILLET RADIUS, SHANK AND ALL THREAD ELEMENTS 0,8µm; ALL OTHER SURFACES 3,2µm.

⚠4 NOMINAL GRIP TO BE SPECIFIED IN INCREMENTS OF 1 mm THROUGH -30 GRIP LENGTH, IN 2 mm INCREMENTS -32 THROUGH -100 GRIP LENGTH, AND 4 mm INCREMENTS -104 GRIP LENGTH AND LONGER.

5. BOLTS SHALL BE FREE FROM BURRS AND SLIVERS. BREAK SHARP EDGES 0,1 TO 0,4.
6. DIMENSIONS IN MILLIMETERS. UNLESS OTHERWISE NOTED.

CODE IDENT. NO.
92215

APPROVED DATE	THIRD ANGLE PROJECTION	TITLE	STANDARD
25 AUGUST 1976	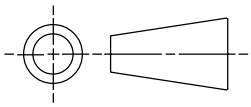	BOLT - BIHEXAGONAL A-286 CRES 1400 MPa METRIC	VS 3171
REV. LETTER AND DATE A 11 FEBRUARY 1977			SHEET 1 OF 1

VSE601-34B

THIS DRAWING IS THE PROPERTY OF VSI CORPORATION. IT IS ISSUED FOR A PARTICULAR LIMITIED PURPOSE. IT CONTAINS INFORMATION PROPRIETARY TO VSI CORPORATION. WHEN THE PURPOSE FOR WHICH IT HAS BEEN ISSUED HAS BEEN FULFILLED, THIS DRAWING SHOULD BE RETURNED TO VSI CORPORATION OR DESTROYED. AND ALL RIGHTS OF REPRODUCTION ARE RESERVED BY VSI CORPORATION.

Fairchild Fasteners

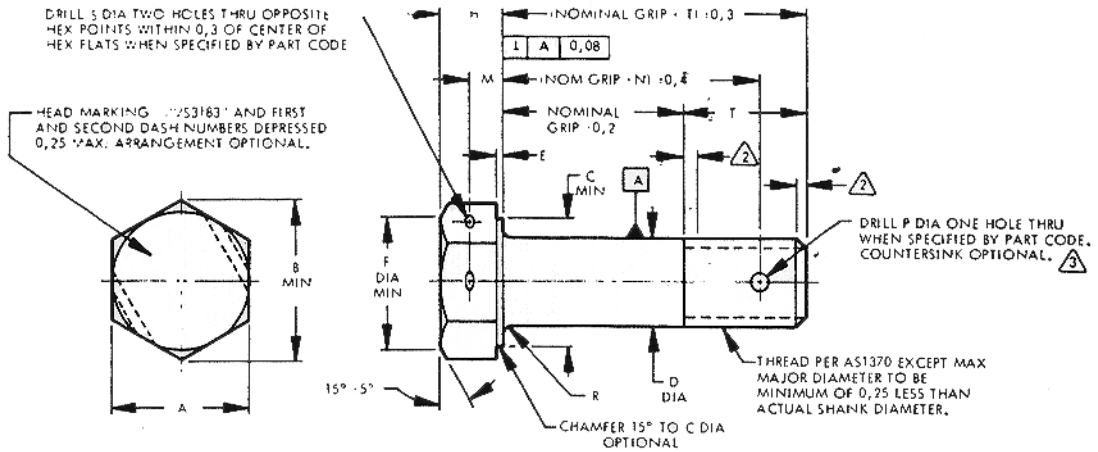

FIRST DASH NO.	THREAD 4h6h	A -13	B MIN	C MIN	D DIA f7	E	F DIA MIN		H	TOL	M	N BASIC	P DIA	R RAD	S DIA	T BASIC	X TIR ①	Y TIR ①	
5	MJ5 x 0.8	8,0 7,85	8,9	7,4	4,990 4,978	0,5 0,2	8,0		3,0 2,7	612	1,90 1,30	6,0	1,64 1,50	0,5 0,3	1,14 1,00	9,0	0,13	0,12	
6	MJ6 x 1,0	10,0 9,78	11,0	9,3	5,990 5,978	0,5 0,2	10,0		3,5 3,2		2,15 1,55	7,0	1,64 1,50	0,7 0,5	1,54 1,40	10,0	0,15	0,12	
7	MJ7 x 1,0	11,0 10,73	12,1	10,2	6,987 6,972	0,5 0,2	11,0		4,0 3,7		2,40 1,80	7,5	2,04 1,90	0,7 0,5	1,54 1,40	11,0	0,18	0,15	
8	MJ8 x 1,0	13,0 12,73	14,4	12,2	7,987 7,972	0,5 0,2	13,0		4,5 4,2		2,65 2,05	7,5	2,04 1,90	0,7 0,5	1,54 1,40	11,5	0,21	0,15	
10	MJ10 X 1,25	17,0 16,73	18,9	16,0	9,987 9,972	0,6 0,3	17,0		5,0 4,7		2,95 2,35	9,5	2,54 2,40	0,8 0,6	1,74 1,60	14,5	0,23	0,15	
12	MJ12 X 1,25	19,0 18,67	21,1	18,0	11,984 11,996	0,6 0,3	19,0		6,0 5,7		3,45 2,85	10,0	2,54 2,40	0,9 0,6	1,74 1,60	16,0	0,26	0,18	
14	MJ14 X 1,5	22,0 21,67	24,5	21,0	13,984 13,966	0,6 0,3	22,0		7,0 6,7	613	3,95 3,35	12,0	3,14 3,00	1,1 0,8	1,74 1,60	19,0	0,30	0,18	
16	MJ16 X 1,5	24,0 23,67	26,8	23,0	15,984 15,966	0,6 0,3	24,0		8,0 7,7		4,45 3,85	13,0	3,14 3,00	1,1 0,8	1,74 1,60	20,5	0,40	0,18	
18	MJ18 X 1,5	27,0 26,67	30,1	26,0	17,984 17,966	0,6 0,3	27,0		9,0 8,7		4,95 4,35	14,0	3,14 3,00	1,3 1,0	1,74 1,60	22,5	0,46	0,18	
20	MJ20 X 1,5	30,0 29,67	33,5	29,0	19,980 19,959	0,6 0,3	30,0		10,0 9,7		5,45 4,85	15,0	3,14 3,00	1,3 1,0	1,74 1,60	24,5	0,50	0,21	

PROCUREMENT SPEC: NA0026 (TENSILE, SHEAR AND FATIGUE REQUIREMETNS ONLY)

MATERIAL: A-286 CRES PER AMS5731 OR AMS5732.

HEAT TREAT: 1100 MPA MINIMUM ULTIMATE TENSILE

FINISH: PASSIVATE PER QQ-P-35

LUBRICANT: DRY FILM LUBRICANT PER MIL-1-8937 (SEE PART CODE).

PART CODE & EXAMPLE: VS3183 -8 -16

- D CODE DESIGNATES DRILLED THREAD
- H CODE DESIGNATES DRILLED HEAD
- L CODE DESIGNATES DRY LUBE COAT
- NOMINAL GRIP IN MILLIMETERS ⑤
- NOMINAL DIAMETER IN MILLIMETERS
- BASIC PART NUMBER

GENERAL NOTES:

① CONCENTRICTY: C AND D DIAMETER WITHIN X TIR AT MAXIMUM MATERIAL CONDITION D DIAMETER AND THREAD PITCH DIAMETER WITHIN "Y" TIR AT MAXIMUM MATERIAL CONDITION.

② INCOMPLETE THREADS PER AS3067.

③ COTTER PIN HOLE CENTERLINE WITHIN 0.25 AND NORMAL WITHIN 2° OF BOLT CENTERLINE.

4. SURFACE ROUGHNESS PER ISO 1302. HEAD BEARING FACE, HEAD TO SHANK FILLET RADIUS, SHANK AND ALL THREAD ELEMENTS 0,8 µm. ALL OTHER SURFACES 3,2 µm.

⑤ NORMAL GRIP TO BE SPECIFIED IN INCREMENTS OF 1 mm THROUGH-30 GRIP LENGTH, IN 2 mm INCREMENTS -32 THROUGH -100 GRIP LENGTH, AND 4 mm INCREMENTS -104 GRIP LENGTH AND LONGER.

6. BOLTS SHALL BE FREE FROM BURRS AND SLIVERS. BREAK SHARP EDGES 0,1 TO 0,4.

7. DIMENSIONS IN MILLIMETERS, UNLESS OTHERWISE NOTED. DIMENSIONS APPLY PRIOR TO LUBE.

THIS DRAWING IS THE PROPERTY OF VSI CORPORATION. IT IS ISSUED FOR A PARTICULAR LIMITIED PURPOSE. IT CONTAINS INFORMATION PROPRIETARY TO VSI CORPORATION, WHEN THE PURPOSE FOR WHICH IT HAS BEEN ISSUED HAS BEEN FULFILLED, THIS DRAWING SHOULD BE RETURNED TO VSI CORPORATION OR DESTROYED. AND ALL RIGHTS OF REPRODUCTION ARE RESERVED BY VSI CORPORATION.

		CODE IDENT. NO. 92215
APPROVED DATE 14 FEBRUARY 1977	TITLE BOLT, HEX HEAD 1100 MPa A-286 CRES METRIC	STANDARD
REV. LETTER AND DATE A 21 JULY 1982		VS 3183 SHEET 1 OF 1

VSE601-34B

Fairchild Fasteners

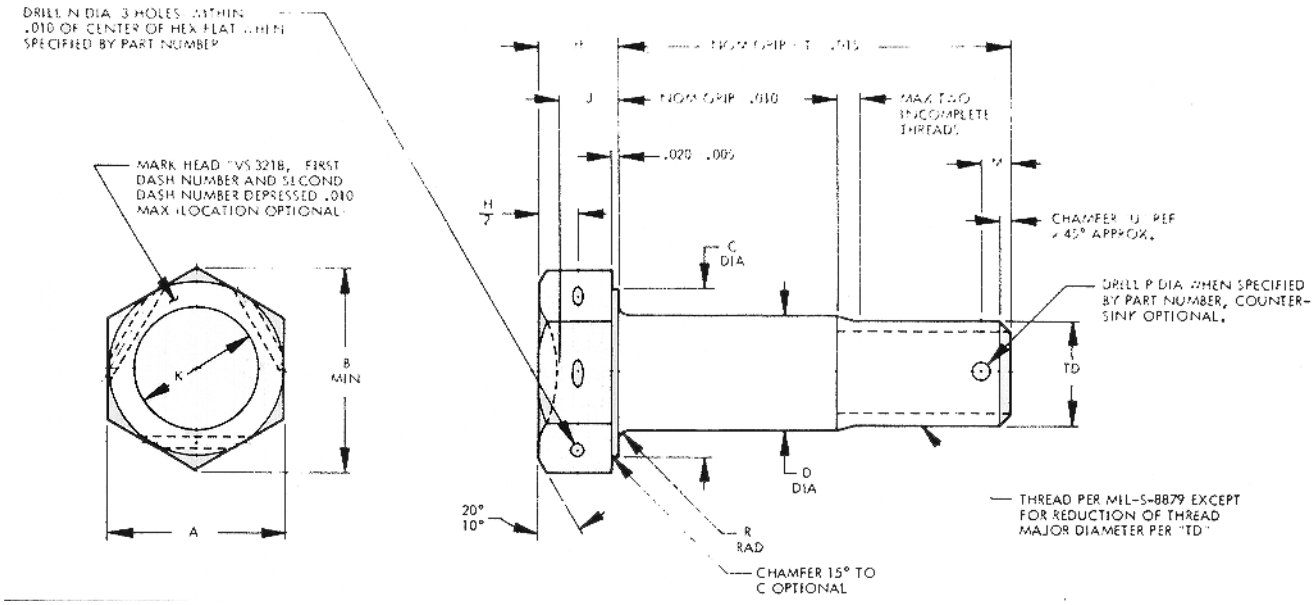

FIRST DASH NO.	THREAD	A	B MIN	C DIA MIN	D DIA ⑧	H	J	K DIA	M	N DIA	P DIA	R RAD	T BASIC	TD DIA	U REF		X TIR ①	Y TIR ①	Z TIR ①
-3	.1900-32UNJF-3A	.376 .367	.410	.335	.1895 .1885	.125 .110	.088 .073	.200 .180	.174 .154	.056 .046	.080 .070	.020 .010	.345	.184 .181	.039		.005	.0045	.0040
-4	.2500-28UNJF-3A	.439 .429	.480	.398	.2495 .2485	.140 .125	.098 .083	.260 .240	.188 .168	.056 .046	.086 .076	.020 .010	.425	.244 .241	.045		.006	.0045	.0030
-5	.3125-24UNJF-3A	.502 .492	.552	.460	.3120 3110	.171 .156	.119 .104	.320 .300	.191 .171	.080 .070	.086 .076	.020 .010	.469	..306 .302	.052		.008	.0045	.0030
-6	.3750-24UNJF-3A	.564 .554	.623	.523	.3745 .3735	.203 .188	.140 .125	.390 .370	.207 .187	.080 .070	.116 .106	.025 .015	.578	.368 .364	.052		.009	.0045	.0025
-7	.4375-20UNJF-3A	.690 .678	.764	.648	.4370 .4360	.234 .219	.161 .146	.450 .440	.211 .191	.080 .070	.116 .106	.025 .015	.694	.431 .426	.062		.010	.006	.0025
-8	.5000-20UNJF-3A	.752 .741	.836	.710	.4995 .4985	.265 .250	.182 .167	.510 .490	.226 .206	.080 .070	.116 .106	.030 .020	.735	.493 .488	.062		.011	.006	.0020
-9	.5625-18UNJF-3A	.877 .865	.978	.835	.5615 .5605	.296 .281	.203 .188	.570 .550	.228 .208	.080 .070	.151 .141	.035 .020	.840	.555 .550	.068		.012	.006	.0020
-10	.6250-18UNJF-3A	.940 .928	1.050	.898	.6240 .6230	.327 .312	.223 .208	.630 .610	.259 .239	.080 .070	.151 .141	.040 .025	.920	.618 .612	.068		.015	.006	.0020
-12	.7500-16UNJF-3A	1.065 1.052	1,191	1.023	.7490 .7480	.390 .375	.265 .250	.760 .740	.262 .242	.080 .070	.151 .141	.045 .030	1.041	.743 .737	.078		.018	.009	.0020

PROCUREMENT SPEC: NAS4002, EXCEPT AS NOTED.

FINSIH: IVD ALUMINUM COAT PER MC AIR PS13143, TYPE II, CLASS 3

PART CODE & EXAMPLE: VS3218 -8 D 10

- 10 — DESIGNATES NOMINAL GRIP IN 16THS
- D — "D" DRILLED SHANK; "H" DRILLED HEAD; "-" UNDRILLED
- -8 — DESIGNATES NOMINAL DIA IN 16THS
- VS3218 — BASIC PART NUMBER

GENERAL NOTES:

① CONCENTRICITY: "C" AND "D" DIAMETER WITHIN "X" VALUES TIR.
"D" AND THREAD PITCH DIA WITHIN "Y" VALUES TIR.

② SHANK STRAIGHTNESS WITHIN "Z" VALUES TIR PER INCH OF LENGTH.

3. BEARING SURFACE OF HEAD TO BE SQUARE TO SHANK WITHIN .003 TIR.
4. "C" DIA MAX NOT TO EXCEED ACTUAL WIDTH ACROSS FLATS; MIN AS TABULATED ON PAGE ONE.
5. COTTER PIN HOLE CENTERLINE WITHIN .010 AND PERPENDICULAR WITHIN 2° OF BOLT CENTERLINE.
6. SURFACE ROUGHNESS HEAD TO SHANK FILLET, THREAD SIDES, THREAD ROOT AND RUNOUT -32 RMS MAX; SHANK AND BEARING SURFACE OF HEAD -63 RMS MAX; OTHER AREAS -125 RMS MAX.
7. REMOVE ALL BURRS, SHANK EDGES AND SLIVERS.

⑧ MEASUREMENT OF COATING THICKNESS TO BE MADE AT LOCATIONS SPECIFIED IN TEST MIL-STD-1312. ACCEPTANCE LEVEL FOR SHANK TOLERANCE TO BE 4.0% AQL.

9. DIMENSIONS IN INCHES TO BE MET AFTER COATING.

CODE IDENT. NO. 92215

APPROVED DATE	THIRD ANGLE PROJECTION	TITLE	STANDARD
28 JUNE 1978		BOLT - HEX HEAD ALLOY STEEL - 160 KSI FTU IVD COATED	VS 3218
REV. LETTER AND DATE			SHEET 1 OF 1

THIS DRAWING IS THE PROPERTY OF VSI CORPORATION. IT IS ISSUED FOR A PARTICULAR LIMITIED PURPOSE. IT CONTAINS INFORMATION PROPRIETARY TO VSI CORPORATION. WHEN THE PURPOSE FOR WHICH IT HAS BEEN ISSUED HAS BEEN FULFILLED, THIS DRAWING SHOULD BE RETURNED TO VSI CORPORATION OR DESTROYED. AND ALL RIGHTS OF REPRODUCTION ARE RESERVED BY VSI CORPORATION.

VSE601-34C

Fairchild Fasteners

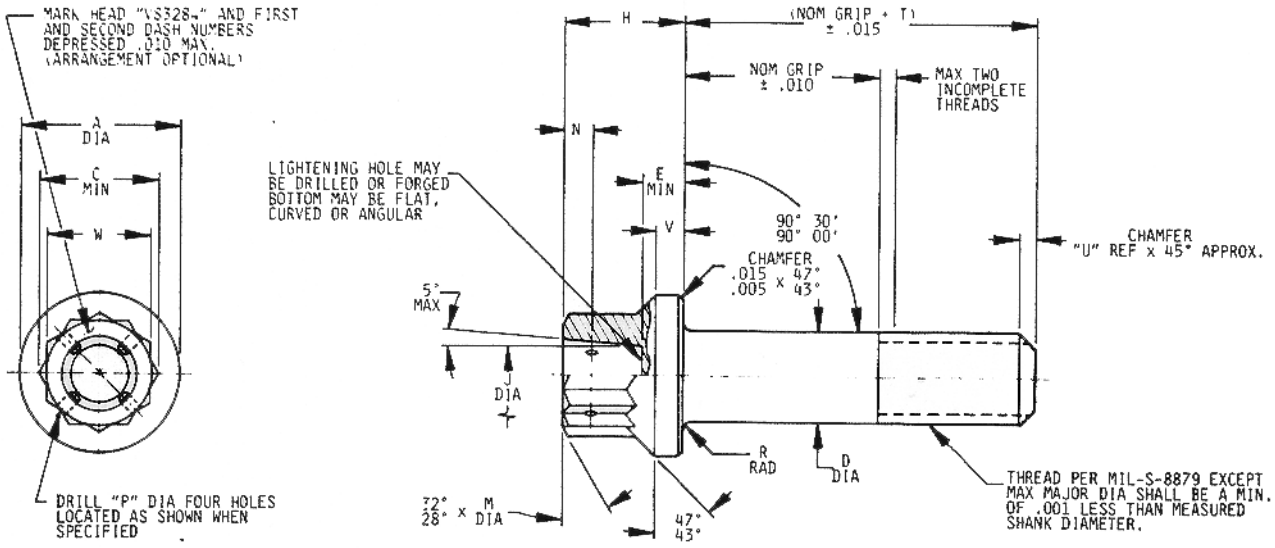

FIRST DASH NO.	THREAD	A DIA	C MIN	D DIA	E MIN		H	J DIA			M DIA	N	P DIA		R RAD		T BASIC	U REF	V	W	X TIR 1	Y TIR 1	Z TIR 1
-3	.1900-32UNJF-3A	.350 .340	.277	.1895 .1885	.092		.285 .265	.135 .095			.250 .235	.072 .052	.042 .032		.041 .031		.334	.039	.074 .054	.251 .243	.005	.004	.0045
-4	.2500-28UNJF-3A	.438 .428	.347	.2495 .2485	.135		.310 .290	.190 .150			.312 .297	.072 .052	.042 .032		.041 .031		.412	.045	.079 .059	.313 .304	.005	.004	.0045
-5	.3125-24UNJF-3A	.531 .521	.419	.3120 .3110	.162		.358 .368	.225 .185			.375 .360	.080 .060	.060 .050		.041 .031		.480	.052	.092 .072	.376 .367	.006	.005	.0045
-6	.3750-24UNJF-3A	.649 .639	.491	.3745 .3735	.197		.398 .378	.270 .230			.437 .422	.080 .060	.060 .050		.057 .047		.560	.052	.101 .081	.439 .430	.008	.006	.0045
-7	.4375-20UNJF-3A	.750 .740	.561	.4370 .4360	.228		.445 .425	.330 .290			.500 .485	.080 .060	.060 .050		.057 .047		.665	.063	.109 .089	.502 .492	.009	.008	.0060
-8	.5000-20UNJF-3A	.828 .818	.631	.4995 .4985	.254		.514 .494	.390 .350			.562 .547	.104 .084	.060 .050		.057 .047		.761	.063	.133 .113	.564 .553	.010	.008	.0060
-9	.5625-18UNJF-3A	.938 .928	.703	.5615 .5605	.287		.567 .547	.450 .410			.625 .610	.104 .084	.060 .050		.057 .047		.828	.069	.143 .123	.627 .616	.011	.009	.0060
-10	.6250-18UNJF-3A	1.050 1.040	.775	.6240 .6230	.327		.628 .608	.510 .470			.687 .672	.104 .084	.060 .050		.073 .063		.868	.069	.160 .140	.690 .679	.012	.010	.0060
-12	.7500-16UNJF-3A	1.230 1.220	.917	.7490 .7480	.380		.721 .701	.580 .540			.812 .797	.104 .084	.060 .050		.073 .063		1.009	.078	.188 .168	.814 .803	.015	.012	.0060
-14	.8750-14UNJF-3A	1.438 1.428	1.059	.8740 .8730	.438		.818 .798	.660 .620			.937 .922	.135 .115	.060 .050		.073 .063		1.175	.089	.208 .188	.940 .928	.018	.014	.0090
-16	1.0000-12UNJF-3A	1.625 1.615	1.200	.9990 .9980	.493		.933 .913	.750 .710			1.062 1.047	.135 .115	.060 .050		.073 .063		1.345	.104	.232 .212	1.064 1.052	.020	.016	.0090

PROCUREMENT SPEC: VSM 1812 6

MATERIAL: INCONEL 718 PER AMS5662 (CHEMISTRY)

HEAT TREAT: 220,000 PSI MINIMUM ULTIMATE TENSILE STRENGTH

FINISH: PASSIVATE PER QQ-P-35

PART CODE & EXAMPLE: VS3284 -4 H 8

- 8 — NOMINAL GRIP LENGTH IN 16THS
- H — DASH (-) DESIGNATES UNDRILLED HEAD; LETTER "H" DESIGNATES DRILLED HEAD
- -4 — NOMINAL DIAMETER IN 16THS
- VS3284 — BASIC PART NUMBER

GENERAL NOTES:

1. CONCENTRICITY: "A", "D", AND "J" DIAMETERS WITHIN "X" TIR. "W" TO "J" DIAMETER WITHIN "Y" TIR. "D" DIA TO THREAD PITCH DIA WITHIN "Z" TIR.
2. SHANK TO BE STRAIGHT WITHIN .003 PER INCH OF LENGTH.
3. SURFACE ROUGHNESS PER ANSI B46.1. BEARING SURFACE OF HEAD, HEAD-TO-SHANK FILLET RADIUS, SHANK AND ALL THREAD ELEMENTS 32 RHR MAX. ALL OTHER SURFACES 125 RHR MAX.
4. REMOVE ALL BURRS.
5. DIMENSIONS IN INCHES.
6. ELONGATION AND REDUCTION OF AREA TO BE REPORTED FOR EACH PRODUCTION LOT. TEST MAY BE CONDUCTED ON A SECTION OF A RAW MATERIAL, PROCESSED WITH THE PRODUCTION LOT, OR ON A SPECIMEN PREPARED FROM A FINISHED BOLT. MINIMUM ELONGATION IN 4D SHALL BE 8% AND MINIMUM REDUCTION OF AREA SHALL BE 15%.

CODE IDENT. NO. 92215

APPROVED DATE 2 NOVEMBER 1981

REV. LETTER AND DATE

TITLE

BOLT, 12-POINT TENSION HEAD
EXTERNAL WRENCHING
INCO 718
220 KSI MIN UTS

STANDARD

VS 3284

SHEET 1 OF 1

THIS DRAWING IS THE PROPERTY OF VSI CORPORATION. IT IS ISSUED FOR A PARTICULAR LIMITED PURPOSE. IT CONTAINS INFORMATION PROPRIETARY TO VSI CORPORATION. WHEN THE PURPOSE FOR WHICH IT HAS BEEN ISSUED HAS BEEN FULFILLED, THIS DRAWING SHOULD BE RETURNED TO VSI CORPORATION OR DESTROYED. AND ALL RIGHTS OF REPRODUCTION ARE RESERVED BY VSI CORPORATION.

Fairchild Fasteners

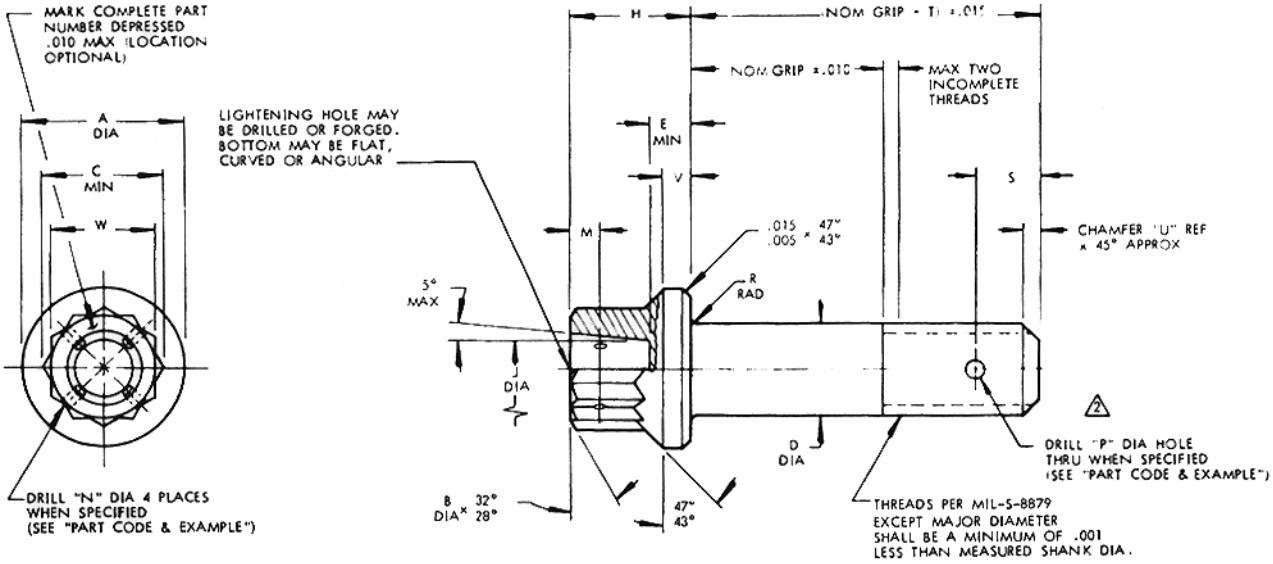

FIRST DASH NO.	THREAD	A DIA	B DIA	C MIN	D DIA	E MIN	H	J DIA	M	N DIA	P DIA	R RAD	S	T	U REF	V	W	X TIR 1	Y TIR 1	Z TIR 1
-3	.1900-32UNJF-3A	.350 .340	.250 .235	.277	.1895 .1890	.092	.285 .265	.135 .095	.072 .052	.042 .032		.041 .031		.399	.045	.074 .054	.251 .243	.005	.004	.0045
-4	.2500-28UNJF-3A	.438 .428	.312 .297	.347	.2495 .2490	.135	.310 .290	.190 .150	.072 .052	.042 .032	.081 .076	.041 .031	.192 .182	.468	.045	.079 .059	.313 .304	.005	.004	.0045
-5	.3125-24UNJF-3A	.531 .521	.375 .360	.419	.3120 .3115	.162	.358 .338	.225 .185	.080 .060	.060 .050	.081 .076	.041 .031	.208 .198	.551	.052	.092 .072	.376 .367	.006	.005	.0045
-6	.3750-24UNJF-3A	.649 .639	.437 .422	.491	.3745 .3740	.197	.398 .378	.270 .230	.080 .060	.060 .050	.111 .106	.057 .047	.223 .213	.614	.052	.101 .081	.439 .430	.008	.006	.0045
-7	.4375-20UNJF-3A	.750 .740	.500 .485	.561	.4370 .4365	.228	.445 .425	.330 .290	.080 .060	.060 .050	.111 .106	.057 .047	.234 .224	.705	.062	.109 .089	.502 .492	.009	.008	.0060
-8	.5000-20UNJF-3A	.828 .818	.562 .547	.631	.4995 .4990	.254	.514 .494	.390 .350	.104 .084	.060 .050	.111 .106	.057 .047	.246 .236	.767	.062	.133 .113	.564 .553	.010	.008	.0060
-9	.5625-18UNJF-3A	.938 .928	.625 .610	.703	.5615 .5610	.287	.567 .547	.450 .410	.104 .084	.060 .050	.146 .141	.057 .047	.253 .243	.849	.069	.143 .123	.627 .616	.011	.009	.0060
-10	.6250-18UNJF-3A	1.050 1.040	.687 .672	.775	.6240 .6235	.327	.628 .608	.510 .470	.104 .084	.060 .050	.146 .141	.073 .063	.254 .244	.912	.069	.160 .140	.690 .679	.012	.010	.0060
-12	.7500-16UNJF-3A	1.230 1.220	.812 .797	.917	.7490 .7485	.380	.721 .701	.580 .540	.104 .084	.060 .050	.146 .141	.073 .063	.218 .208	1.052	.078	.188 .168	.814 .803	.015	.012	.0060
-14	.8750-14UNJF-3A	1.438 1.428	.937 .922	1.059	.8740 .8735	.438	.818 .798	.660 .620	.135 .115	.060 .050	.146 .141	.073 .063	.283 .273	1.186	.090	.208 .188	.940 .928	.018	.014	.0090
-16	1.0000-12UNJF-3A	1.625 1.615	1.062 1.047	1.200	.9995 .9990	.493	.933 .913	.750 .710	.135 .115	.060 .050	.146 .141	.073 .063	.389 .379	1.501	.100	.232 .212	1.064 1.052	.020	.016	.0090

PROCUREMENT SPEC: VSM 1742

MATERIAL: INCO-718 PER AMS 5662

HEAT TREAT: 180,000 PSI MINIMUM ULTIMATE TENSILE STRENGTH.

FINISH: PASSIVATE PER QQ-C-35

PART CODE & EXAMPLE: VS 3288 -4 D 12

- 12 — NOM GRIP LENGTH IN 16THS
- D — DASH (-) = UNDRILLED SHANK AND HEAD; LETTER "D" = DRILLED SHANK; LETTER "H" = DRILLED HEAD
- -4 — NOM DIAMETER IN 16THS
- VS 3288 — BASIC PART NUMBER

GENERAL NOTES:

1. CONCENTRICITY: "A" DIA, "D" DIA, AND "J" DIA WITHIN "X" TIR.
   "J" DIA, AND "W" DIMENSION WITHIN "Y" TIR.
   "D" DIA TO THREAD PITCH DIAMETER WITHIN "Z" TIR.
2. COTTER PIN HOLE CENTERLINE: WITHIN .010 AND NORMAL WITHIN 2° OF BOLT CENTERLINE.
3. BEARING SURFACE OF HEAD SHALL BE SQUARE TO SHANK WITHIN .003 TIR.
4. SHANK SHALL BE STRAIGHT WITHIN "Z" VALUES PER INCH OF BOLT LENGTH.
5. DIMENSIONS IN INCHES.
6. SURFACE ROUGHNESS PER ANSI 846.1. BEARING SURFACE OF HEAD, HEAD TO SHANK FILLET, SHANK AND ALL THREAD ELEMENTS 37 MAX RHR. ALL OTHER SURFACES 125 MAX RHR.

THIS DRAWING IS THE PROPERTY OF VSI CORPORATION. IT IS ISSUED FOR A PARTICULAR LIMITIED PURPOSE. IT CONTAINS INFORMATION PROPRIETARY TO VSI CORPORATION, WHEN THE PURPOSE FOR WHICH IT HAS BEEN ISSUED HAS BEEN FULFILLED, THIS DRAWING SHOULD BE RETURNED TO VSI CORPORATION OR DESTROYED. AND ALL RIGHTS OF REPRODUCTION ARE RESERVED BY VSI CORPORATION.

		CODE IDENT. NO. 92215
APPROVED DATE 4 MARCH 1982	TITLE BOLT, DOUBLE HEX HEAD INCO-718 180 KSI TENSILE	STANDARD
REV. LETTER AND DATE		VS 3288 SHEET 1 OF 1

VSE601-34B

Fairchild Fasteners

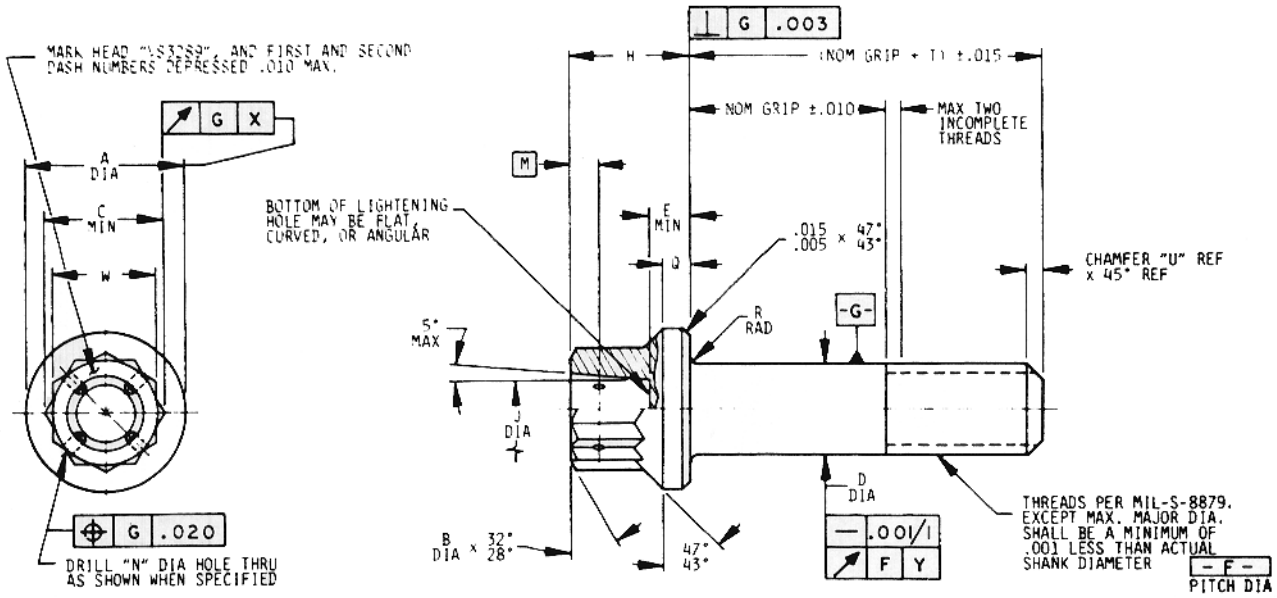

FIRST DASH NO.	THREAD	A DIA	B DIA	C MIN	D DIA	E MIN		H	J DIA		M	N DIA	Q	R RAD	T	U REF	W				CONCENTRICITY X TIR	CONCENTRICITY Y TIR	
-4	.2500-28UNJF-3A	.438 .428	.322 .302	.347	.2495 .2485	.135		.310 .290	.190 .150		.062	.042 .032	.079 .059	.041 .031	.556	.050	.315 .306				.005	.0045	
-5	.3125-24UNJF-3A	.531 .521	.385 .365	.419	.3120 .3110	.162		.358 .338	.225 .185		.070	.060 .050	.092 .072	.041 .031	.655	.050	.377 .368				.006	.0045	
-6	.3750-24UNJF-3A	.649 .639	.448 .428	.491	.3745 .3735	.197		.398 .378	.270 .230		.070	.060 .050	.101 .081	.057 .047	.702	.060	.439 .430				.008	.0045	
-7	.4375-20UNJF-3A	.750 .740	.510 .490	.561	.4370 .4360	.228		.445 .425	.330 .290		.070	.060 .050	.109 .089	.057 .047	.794	.060	.503 .494				.009	.0060	
-8	.5000-20UNJF-3A	.828 .818	.572 .552	.631	.4995 .4985	.254		.514 .494	.390 .350		.094	.060 .050	.133 .113	.057 .047	.841	.080	.565 .556				.010	.0060	
-9	.5625-18UNJF-3A	.938 .928	.635 .615	.703	.5615 .5605	.287		.567 .547	.450 .410		.094	.060 .050	.143 .123	.057 .047	.937	.080	.628 .619				.011	.0060	
-10	.6250-18UNJF-3A	1.050 1.040	.698 .678	.775	.6240 .6230	.327		.628 .608	.510 .470		.094	.060 .050	.160 .140	.073 .063	.984	.090	.691 .682				.012	.0060	
-12	.7500-16UNJF-3A	1.230 1.220	.823 .803	.917	.7490 .7480	.380		.721 .701	.580 .540		.094	.060 .050	.188 .168	.073 .063	1.118	.090	.817 .808				.015	.0060	
-14	.8750-14UNJF-3A	1.438 1.428	.948 .928	1.059	.8740 .8730	.438		.818 .798	.660 .620		.125	.060 .050	.208 .188	.073 .063	1.336	.100	.943 .934				.018	.0090	
-16	1.0000-12UNJF-3A	1.625 1.615	1.072 1.052	1.200	.9990 .9980	.493		.933 .913	.750 .710		.125	.060 .050	.232 .212	.073 .063	1.548	.100	1.066 1.056				.020	0090	
-16A	1.0000-14UNJF-3A	1.625 1.615	1.072 1.052	1.200	.9990 .9980	.493		.933 .913	.750 .710		.125	.060 .050	.232 .212	.073 .063	1.548	.100	1.066 1.056				.020	.0090	
-18	1.1250-12UNJF-3A	1.875 1.865	1.260 1.240	1.414	1.1240 1.1225	.556		1.061 1.041	.850 .810		.125	.060 .050	.268 .248	.073 .063	1.753	.130	1.255 1.245				.022	.0090	
-20	1.2500-12UNJF-3A	2.125 2.115	1.322 1.302	1.484	1.2490 1.2475	.636		1.165 1.145	.960 .920		.125	.060 .050	.279 .259	.089 .077	1.863	.130	1.318 1.308				.025	.0090	
-22	1.3750-12UNJF-3A	2.313 2.303	1.448 1.428	1.628	1.3740 1.3725	.698		1.276 1.256	1.080 1.040		.188	.060 .050	.284 .264	.089 .077	1.988	.130	1.444 1.434				.028	.0120	
-24	1.5000-12UNJF-3A	2.500 2.490	1.635 1.615	1.842	1.4990 1.4975	.750		1.444 1.424	1.210 1.170		.188	.060 .050	.345 .325	.089 .077	2.113	.130	1.632 1.622				.030	.0120	

PROCUREMENT SPEC: MIL-B-8831

MATERIAL: ALLOY STEEL PER MIL-S-8844 CLASS 1 (4340)

FINISH:

NO CODE	=	CADMIUM PLATE PER QQ-P-416, TYPE II, CLASS 2
CODE LETTER "B"	=	BLACK OXIDE PER MIL-C-13924, CLASS 1.
CODE LETTER "S"	=	SILVER PLATE PER QQ-S-365 OR SS8487 (SIKORSKY) .0003-.0005 THICK.

PART CODE & EX.: VS3289 -6 — -20

- -20: DESIGNATES NOMINAL GRIP LENGTH IN ONE-EIGHTH INCH INCREMENTS.
- —: ⚠
- -6: DESIGNATES NOMINAL DIAMETER IN SIXTEENTHS
- VS3289: VOI-SHAN BASIC PART NUMBER

GENERAL NOTES:

⚠ DASH (-) DESIGNATES UNDRILLED CADMIUM PLATED BOLT.

LETTER "H" DESIGNATES DRILLED HEAD.

LETTERS "B" OR "S" DESIGNATE ALTERNATE FINISHES.

WHEN MORE THAN ONE CODE LETTER IS USED BETWEEN DASH NUMBERS, ARRANGE LETTERS ALPHABETICALLY.

2. 100% MAGNETIC PARTICLE INSPECTION.
3. STRESS DURABILITY - FASTENERS FROM EACH PRODUCTION LOT SHALL BE TESTED IN ACCORDANCE WITH TEST 5, MIL-STD-1312 EXCEPT LOAD SHALL BE MAINTAINED FOR 100 HOURS WITHOUT FAILURE.
4. SURFACE ROUGHNESS PER ANSI B46.1; HEAD BEARING SURFACE, HEAD TO SHANK FILLET RADIUS, SHANK AND ALL THREAD ELEMENTS 32 MAX, RHR, ALL OTHER SURFACES 125 MAX. RHR.
5. REMOVE ALL BURRS, SHARP EDGES, AND SLIVERS WHICH MIGHT BECOME DISLODGED UNDER USAGE.
6. DIMENSIONS IN INCHES, AND TO BE MET AFTER PLATING OR COATING.

THIS DRAWING IS THE PROPERTY OF VSI CORPORATION. IT IS ISSUED FOR A PARTICULAR LIMITED PURPOSE. IT CONTAINS INFORMATION PROPRIETARY TO VSI CORPORATION. WHEN THE PURPOSE FOR WHICH IT HAS BEEN ISSUED HAS BEEN FULFILLED, THIS DRAWING SHOULD BE RETURNED TO VSI CORPORATION OR DESTROYED. AND ALL RIGHTS OF REPRODUCTION ARE RESERVED BY VSI CORPORATION.

		CODE IDENT. NO. 92215
APPROVED DATE 5 APRIL 1982	TITLE BOLT - 12-POINT, EXTERNAL WRENCHING ALLOY STEEL 180,000 PSI MIN. UTS	STANDARD
A REV. LETTER AND DATE 12 APRIL 1982		VS 3289
		SHEET 1 OF 1

VSE601-34B

Fairchild Fasteners

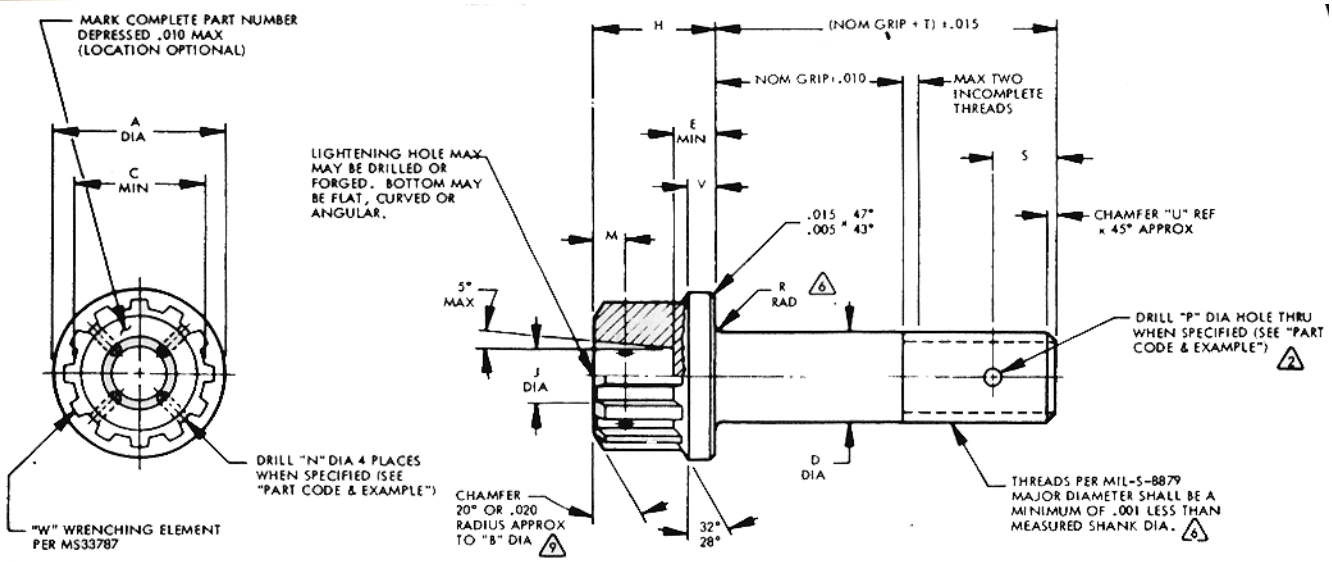

FIRST DASH NO.	THREAD	A DIA	B DIA	C MIN	D DIA uncoated	D DIA coated 10	E MIN	H	J DIA		M	N DIA	P DIA	R RAD 6	S	T	U REF	V	W WRENCH ELEMENT NUMBER	X TIR 1	Y TIR 1	Z TIR 1
-3	.1900-32UNJF-3A	.359 .349	.188 .173	.253	.1895 .1890	.1895 .1885	.113	.215 .195	.110 .070		.072 .052	.042 .032	.075 .070	.041 .031	.121 .111	.376	.045	.037 .017	8	.005	.004	.0045
-4	.2500-28UNJF-3A	.470 .460	.250 .235	.318	.2495 .2490	.2495 .2485	.149	.260 .240	.135 .095		.072 .052	.042 .032	.081 .076	.041 .031	.192 .182	.446	.045	.046 .026	10	.005	.004	.0045
-5	.3125-24UNJF-3A	.585 .575	.375 .360	.383	.3120 .3115	.3120 .3110	.187	.322 .302	.225 .185		.080 .060	.060 .050	.081 .076	.041 .031	.208 .198	.538	.052	.055 .035	12	.006	.005	.0045
-6	.3750-24UNJF-3A	.701 .691	.438 .423	.448	.3745 .3740	.3745 .3735	.224	.347 .327	.270 .230		.080 .060	.060 .050	.111 .106	.057 .047	.223 .213	.608	.052	.064 .044	14	.008	.006	.0045
-7	.4375-20UNJF-3A	.817 .807	.500 .485	.514	.4370 .4360	.4370 .4360	.262	.403 .383	.330 .290		.080 .060	.060 .050	.111 .106	.057 .047	.234 .224	.705	.062	.073 .053	16	.009	.008	.0060
-8	.5000-20UNJF-3A	.932 922	.562 .547	.644	.4995 .4985	.4995 .4985	.299	.460 .440	.390 .350		.104 .084	.060 .050	.111 .106	.057 .047	.246 .236	.780	.062	.082 .062	20	.010	.008	.0060
-9	.5625-18UNJF-3A	1.047 1.037	.625 .610	.711	.5615 .5610	.5615 .5605	.336	.515 .495	.450 .410		.104 .084	.060 .050	.146 .141	.057 .047	.253 .243	.876	.069	.091 .071	22	.011	.009	.0060
-10	.6250-18UNJF-3A	1.163 1.153	.688 .673	.774	.6240 .6230	.6240 .6230	.374	.572 .552	.510 .470		.104 .084	.060 .050	.146 .141	.073 .063	.254 .244	.946	.069	.100 .080	24	.012	.010	.0060
-12	.7500-16UNJF-3A	1.394 1.384	.812 .797	.904	.7490 .7480	.7490 .7480	.499	.610 .590	.580 .540		.104 .084	.060 .050	.146 .141	.073 .063	.218 .208	1.104	.078	.118 .098	28	.015	.012	.0060
-14	.8750-14UNJF-3A	1.625 1.615	.938 .923	1.034	.8740 .8730	.8740 .8730	.523	.710 .690	.660 .620		.135 .115	.060 .050	.146 .141	.073 .063	.283 .273	1.275	.090	.135 .115	32	.018	.014	.0090
-16	1.0000-12UNJF-3A	1.856 1846	1.062 1.047	1.229	.9990 .9980	.9990 .9980	.599	.810 .790	.750 .710		.135 .115	.060 .050	.146 .141	.073 .063	.389 .379	1.466	.100	.154 .134	38	.020	.016	.0090
18	1.1250-12UNJF-3A	2.087 2.077	1.250 1.215	1.358	1.1240 1.1230	1.1240 1.1225	.674	.910 .890	.850 .810		.135 .115	.060 .050	.146 .141	.118 .108	.449 .439	1.521	.100	.172 .152	42	.022	.016	.0090

PROCUREMENT SPEC: VSM1812, TYPE A.

MATERIAL: INCO-718 PER CHEMISTRY OF AMS 5662.

HEAT TREAT: 220,000 PSI MINIMUM ULTIMATE TENSILE STRENGTH. SEE PROCUREMENT SPEC.

FINISH: NO CODE: PASSIVATE PER QQ-P-35.

CODE "A": IVD ALUMINUM COAT PER MIL-C-83488, TYPE II, CLASS 3. 10

PART CODE & EXAMPLE: VS3318 - 4 D 12 X

- X — NO CODE STANDARD SHANK (D) DIA; X 1.64 OVERSIZE SHANK (D) DIA; Y 1.32 OVERSIZE SHANK (D) DIA
- 12 — NOM GRIP LENGTH IN 16THS
- D — DASH (-) UNDRILLED SHANK AND HEAD; LETTER "D" DRILLED SHANK; LETTER "H" DRILLED HEAD
- 4 — NOM DIAMETER IN 16THS
- - — DASH (-) PASSIVATE; LETTERS "A" IVD COAT
- VS3318 — BASIC NUMBER

GENERAL NOTES:

1. CONCENTRICITY: "A" DIA, "D" DIA AND "J" DIA WITHIN "X" TIR. "J" DIA AND "W" DIMENSION WITHIN "Y" TIR. "D" DIA TO THREAD PITCH DIAMETER WITHIN "Z" TIR.
2. COTTER PIN HOLE CENTERLINE: WITHIN .010 AND NORMAL WITHIN 2º OF BOLT CENTERLINE.
3. BEARING SURFACE OF HEAD SHALL BE SQUARE TO SHANK WITHIN .003 TIR.
4. SHANK SHALL BE STRAIGHT WITHIN "Z" VALUES PER INCH OF BOLT LENGTH.
5. DIMENSIONS IN INCHES AND TO BE MET AFTER COATING WHEN APPLICABLE.
6. THREADS AND HEAD TO SHANK FILLET RADIUS TO BE ROLLED AFTER HEAT TREAT.
7. SURFACE ROUGHNESS PER ANSI 846.1 BEARING SURFACE OF HEAD. HEAD TO SHANK FILLET, SHANK AND ALL THREAD ELEMENTS 32 MAX RHR. ALL OTHER SURFACES 125 MAX RHR.
8. 100" FLUORESCENT PENETRANT INSPECT PER MIL-I-6866.
9. NATURAL FLOW OF MATERIAL PERMITTED.
10. MEASUREMENT OF COATING THICKNESS TO BE MADE AT LOCATION SPECIFIED IN TEST 12, MIL-STD-1312. ACCEPTANCE FOR SHANK TOLERANCE TO BE 4.0% AQL.

THIS DRAWING IS THE PROPERTY OF VSI CORPORATION. IT IS ISSUED FOR A PARTICULAR LIMITIED PURPOSE. IT CONTAINS INFORMATION PROPRIETARY TO VSI CORPORATION. WHEN THE PURPOSE FOR WHICH IT HAS BEEN ISSUED HAS BEEN FULFILLED, THIS DRAWING SHOULD BE RETURNED TO VSI CORPORATION OR DESTROYED. AND ALL RIGHTS OF REPRODUCTION ARE RESERVED BY VSI CORPORATION.

CODE IDENT. NO.	APPROVED DATE	THIRD ANGLE PROJECTION	TITLE	STANDARD
92215	1 MARCH 1981		BOLT, SPLINE HEAD INCO-718 SEE ORIGINAL FOR INFORMATION	VS 3318
	REV. LETTER AND DATE B SEE ORIGINAL FOR DATE			SHEET 1 OF 1

VSE601-34B

Fairchild Fasteners

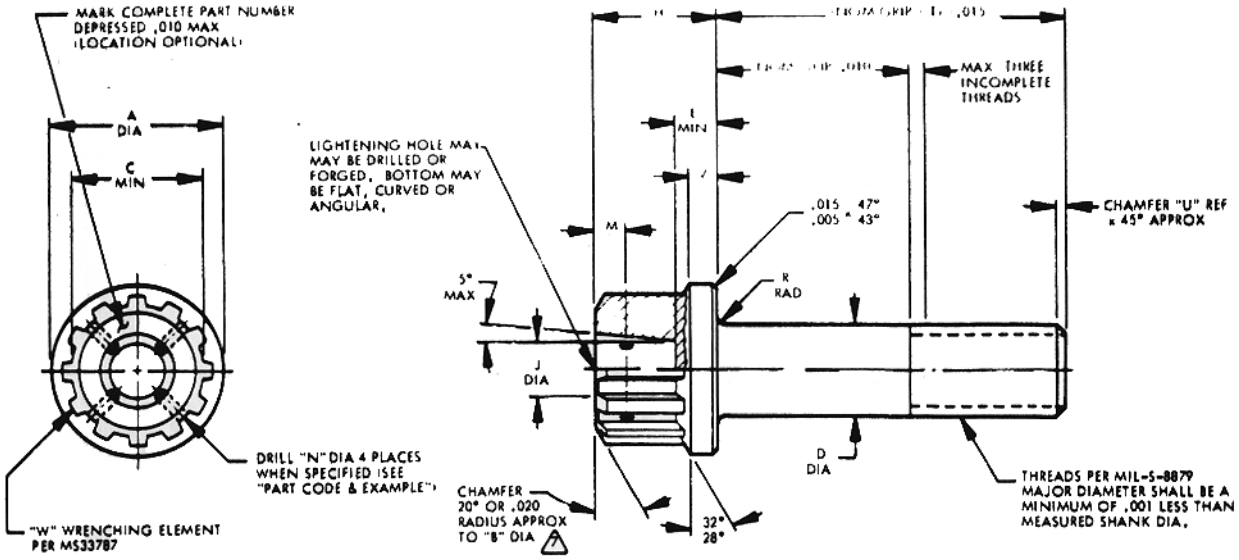

FIRST DASH NO.	THREAD	A DIA	B DIA	C MIN		D DIA	E MIN	H	J DIA		M	N DIA	P DIA	R RAD	S	T	U REF	V	W WRENCH ELEMENT NUMBER	X TIR 1	Y TIR 1	Z TIR 1
-3	.1900-32UNJF-3A	.359 .349	.188 .173	.253		.2026 .2016	.113	.215 .195	.110 .070		.072 .052	.042 .032		.041 .031		.378	.045	.037 .017	8	.005	.004	.0045
-4	.2500-28UNJF-3A	.470 .460	.250 .235	.318		.2651 .2641	.149	.260 .240	.135 .095		.072 .052	.042 .032		.041 .031		.455	.045	.046 .026	10	.005	.004	.0045
-5	.3125-24UNJF-3A	.585 .575	.375 .360	.383		.3276 .3266	.187	.322 .302	.225 .185		.080 .060	.060 .050		.041 .031		.541	.052	.055 .035	12	.006	.005	.0045
-6	.3750-24UNJF-3A	.701 .691	.438 .423	.448		.3901 .3891	.224	.347 .327	.270 .230		.080 .060	.060 .050		.057 .047		.604	.052	.064 .044	14	.008	.006	.0045
-7	.4375-20UNJF-3A	.817 .807	.500 .485	.514		.4526 .4516	.262	.403 .383	.330 .290		.080 .060	.060 .050		.057 .047		.701	.062	.073 .053	16	.009	.008	.0060
-8	.5000-20UNJF-3A	.932 .922	.562 .547	.644		.5151 .5141	.299	.460 .440	.390 .350		.104 .084	.060 .050		.057 .047		.763	.062	.082 .062	20	.010	.008	.0060
-9	.5625-18UNJF-3A	1.047 1.037	.625 .610	.711		.5771 .5761	.336	.515 .495	.450 .410		.104 .084	.060 .050		.057 .047		.847	.069	.091 .071	22	.011	.009	.0060
-10	.6250-18UNJF-3A	1.163 1.153	.688 .673	.774		.6396 .6386	.374	.572 .552	.510 .470		.104 .084	.060 .050		.073 .063		.910	.069	.100 .080	24	.012	.010	.0060
-12	.7500-16UNJF-3A	1.394 1.384	.812 .797	.904		.7646 .7636	.499	.610 .590	.580 .540		.104 .084	.060 .050		.073 .063		1.063	.078	.118 .098	28	.015	.012	.0060
-14	.8750-14UNJF-3A	1.625 1.615	.938 .923	1.034		.8896 .8886	.523	.710 .690	.660 .620		.135 .115	.060 .050		.073 .063		1.223	.090	.135 .115	32	.018	.014	.0090
-16	1.0000-12UNJF-3A	1.856 1846	1.062 1.047	1.229		1.0146 1.0136	.599	.810 .790	.750 .710		.135 .115	.060 .050		.073 .063		1.396	.100	.154 .134	38	.020	.016	.0090

PROCUREMENT SPEC: MIL-B-8831

MATERIAL: ALL OF STEEL PER MIL-0-6049 8740 OP MIL-5-5000 (4340).

FINISH: CADMIUM PLATE PER QQ-P-416, TYPE II, CLASS 2.

PART CODE & EXAMPLE: VS3342 -4 H -20

- -20 — DESIGNATES NOMINAL GRIP LENGTH IN 16THS.
- H — LETTER "H" IN LIEU OR DASH DESIGNATES DRILLED HEAD.
- -4 — DESIGNATES NOMINAL DIAMETER IN 16THS.
- VS3342 — VOI-SHAN BASIC PART NUMBER.

GENERAL NOTES:

1. CONCENTRICITY — DIMENSIONS "A" "D" AND "J" SHALL BE CONCENTRIC TO EACH OTHER WITHIN "X" TIR. DIMENSIONS "W" AND "J" SHALL BE CONCENTRIC TO EACH OTHER WITHIN "Y" TIR. DIMENSIONS "D" SHALL BE CONCENTRIC TO THREAD PITCH DIAMETER WITHIN "Z" TIR.
2. SHANK SHALL BE STRAIGHT WITHIN .003 TIR PER INCH OF LENGTH.
3. BEARING SURFACE OF HEAD SHALL BE SQUARE TO SHANK WITHIN .003 TIR.
4. SURFACE ROUGHNESS PER ANSI 846.1, HEAD BEARING SURFACE, HEAD TO SHANK FILLET RADIUS, SHANK AND ALL THREAD ELEMENTS 32 MAX, RHR. ALL OTHER SURFACES 125 MAX, RHR.
5. REMOVE ALL BURRS, SHARP EDGES AND SLIVERS WHICH MIGHT BECOME DISLODGED UNDER USAGE.
6. DIMENSIONS IN INCHES.

1 NATURAL FLOW OF MATERIAL PERMITTED.

CODE IDENT. NO.
92215

APPROVED DATE
4 MAY 1984

REV. LETTER AND DATE

THIRD ANGLE PROJECTION

TITLE
BOLT, SPLINE HEAD
INCO-718
180,000 PSI
.0164 OVERSIZE

STANDARD

VS 3342

SHEET 1 OF 1

THIS DRAWING IS THE PROPERTY OF VSI CORPORATION. IT IS ISSUED FOR A PARTICULAR LIMITIED PURPOSE. IT CONTAINS INFORMATION PROPRIETARY TO VSI CORPORATION. WHEN THE PURPOSE FOR WHICH IT HAS BEEN ISSUED HAS BEEN FULFILLED, THIS DRAWING SHOULD BE RETURNED TO VSI CORPORATION OR DESTROYED. AND ALL RIGHTS OF REPRODUCTION ARE RESERVED BY VSI CORPORATION.

VSE601-34B

Fairchild Fasteners

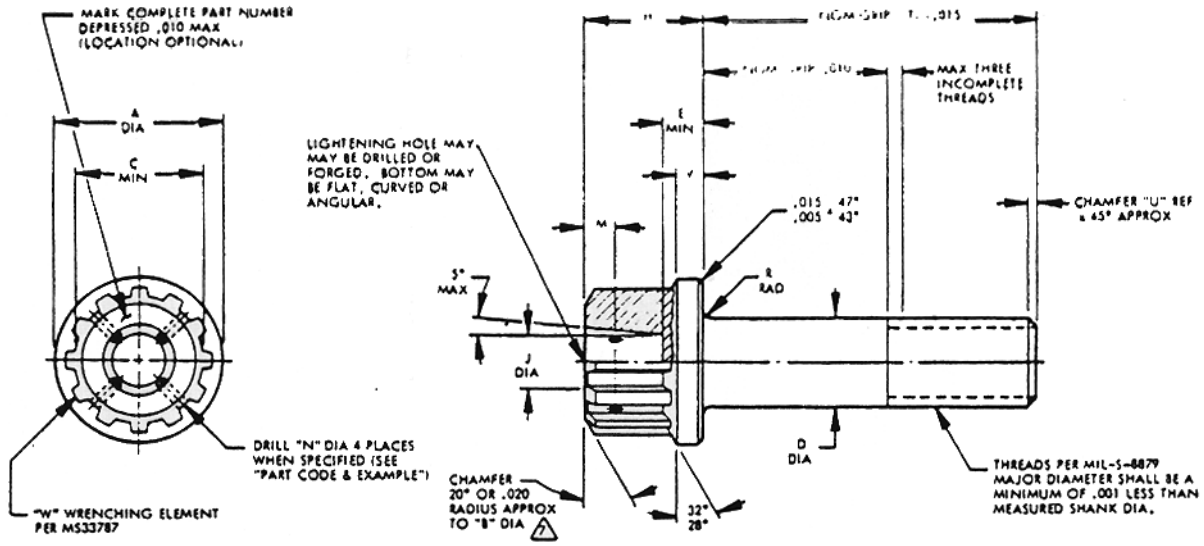

FIRST DASH NO.	THREAD	A DIA	B DIA	C MIN		D DIA	E MIN	H	J DIA		M	N DIA		R RAD		T	U REF	V	W WRENCH ELEMENT NUMBER	X TIR 1	Y TIR 1	Z TIR 1
-3	.1900-32UNJF-3A	.359 .349	.188 .173	.253		.2182 .2172	.113	.215 .195	.110 .070		.072 .052	.042 .032		.041 .031		.378	.045	.037 .017	8	.005	.004	.0045
-4	.2500-28UNJF-3A	.470 .460	.250 .235	.318		.2807 .2797	.149	.260 .240	.135 .095		.072 .052	.042 .032		.041 .031		.455	.045	.046 .026	10	.005	.004	.0045
-5	.3125-24UNJF-3A	.585 .575	.375 .360	.383		.3432 .3422	.187	.322 .302	.225 .185		.080 .060	.060 .050		.041 .031		.541	.052	.055 .035	12	.006	.005	.0045
-6	.3750-24UNJF-3A	.701 .691	.438 .423	.448		.4057 .4047	.224	.347 .327	.270 .230		.080 .060	.060 .050		.057 .047		.604	.052	.064 .044	14	.008	.006	.0045
-7	.4375-20UNJF-3A	.817 .807	.500 .485	.514		.4682 .4672	.262	.403 .383	.330 .290		.080 .060	.060 .050		.057 .047		.701	.062	.073 .053	16	.009	.008	.0060
-8	.5000-20UNJF-3A	.932 .922	.562 .547	.644		.5307 .5297	.299	.460 .440	.390 .350		.104 .084	.060 .050		.057 .047		.763	.062	.082 .062	20	.010	.008	.0060
-9	.5625-18UNJF-3A	1.047 1.037	.625 .610	.711		.5927 .5917	.336	.515 .495	.450 .410		.104 .084	.060 .050		.057 .047		.847	.069	.091 .071	22	.011	.009	.0060
-10	.6250-18UNJF-3A	1.163 1.153	.688 .673	.774		.6552 .6542	.374	.572 .552	.510 .470		.104 .084	.060 .050		.073 .063		.910	.069	.100 .080	24	.012	.010	.0060
-12	.7500-16UNJF-3A	1.394 1.384	.812 .797	.904		.7802 .7792	.499	.610 .590	.580 .540		.104 .084	.060 .050		.073 .063		1.063	.078	.118 .098	28	.015	.012	.0060
-14	.8750-14UNJF-3A	1.625 1.615	.938 .923	1.034		.9052 .9042	.523	.710 .690	.660 .620		.135 .115	.060 .050		.073 .063		1.223	.090	.135 .115	32	.018	.014	.0090
-16	1.0000-12UNJF-3A	1.856 1.846	1.062 1.047	1.229		1.0302 1.0292	.599	.810 .790	.750 .710		.135 .115	.060 .050		.073 .063		1.396	.100	.154 .134	38	.020	.016	.0090

PROCUREMENT SPEC: MIL-B-8831

MATERIAL: ALLOY STEEL PER MIL-5-6049 (8740) OR MIL-5-5000 (4340).

FINISH: CADIUM PLATE PRE QQ-P-416, TYPE II, CLASS 2.

PART CODE & EXAMPLE: VS3343 -4 H -20

- -20 — DESIGNATES NOMINAL GRIP LENGTH IN 16THS.
- H — LETTER "H" IN LIEU OR DASH DESIGNATES DRILLED HEAD
- -4 — DESIGNATES NOMINAL DIAMETER IN 16THS.
- VS3343 — VOI-SHAN BASIC PART NUMBER.

GENERAL NOTES:

1. CONCENTRICITY: DIMENSIONS "A", "D" AND "J" SHALL BE CONCENTRIC TO EACH OTHER WITHIN "X" TIR.
   DIMENSIONS "W" AND "J" SHALL BE CONCENTRIC TO EACH OTHER WITHIN "Y" TIR.
   DIMENSION "D" SHALL BE CONCENTRIC TO THREAD PITCH DIAMETER WITHIN "Z" TIR.
2. SHANK SHALL BE STRAIGHT WITHIN .003 TIR PER INCH OF LENGTH.
3. BEARING SURFACE OF HEAD SHALL BE SQUARE TO SHANK WITHIN .003 TIR.
4. SURFACE ROUGHNESS PER ANSI 846. 1: HEAD BEARING SURFACE, HEAD TO SHANK FILLET RADIUS, SHANK AND ALL THREAD ELEMENTS 32 MAX. RHR, ALL OTHER SURFACES 125 MAX. RHR.
5. REMOVE ALL BURRS, SHARP EDGES AND SLIVERS WHICH MIGHT BECOME DISLODGED UNDER USAGE.
6. DIMENSIONS IN INCHES.

1 NATURAL FLOW OF MATERIAL PERMITTED.

CODE IDENT. NO.
92215

APPROVED DATE
4 MAY 1984

REV. LETTER AND DATE

THIRD ANGLE PROJECTION

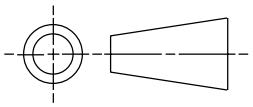

TITLE
BOLT, SPLINE HEAD
ALLOY STEEL
180,000 PSI
.0312 OVERSIZE

STANDARD

VS 3343

SHEET 1 OF 1

THIS DRAWING IS THE PROPERTY OF VSI CORPORATION. IT IS ISSUED FOR A PARTICULAR LIMITED PURPOSE. IT CONTAINS INFORMATION PROPRIETARY TO VSI CORPORATION, WHEN THE PURPOSE FOR WHICH IT HAS BEEN ISSUED HAS BEEN FULFILLED, THIS DRAWING SHOULD BE RETURNED TO VSI CORPORATION OR DESTROYED. AND ALL RIGHTS OF REPRODUCTION ARE RESERVED BY VSI CORPORATION.

VSE601-34B

REVIEWER SYMBOLS: DLA - IS ARMY - AT USAF - 99
USER SYMBOLS: ARMY - MI

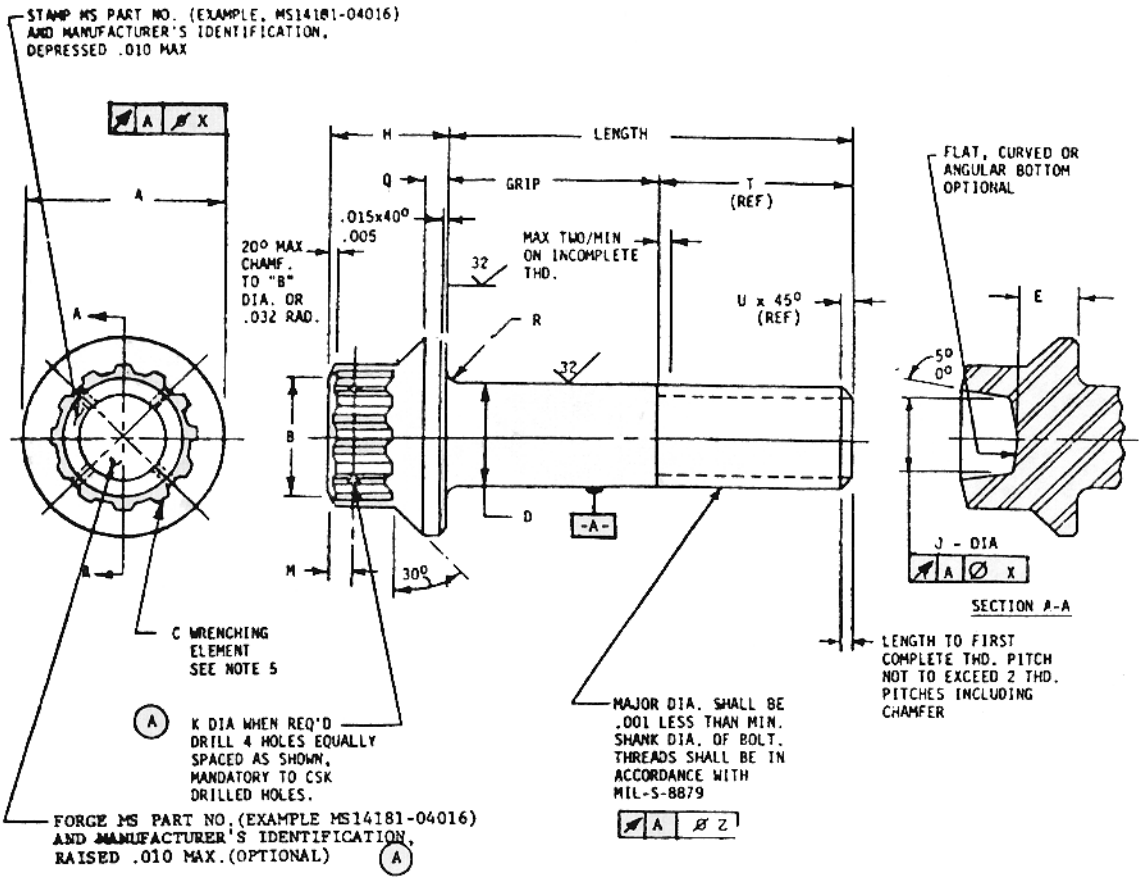

REQUIREMENTS:

1. MATERIAL: INCONEL 718 PER AMS 5662, AMS 5663
2. (A) HEAT TREATMENT: 220 KSI MIN TENSILE STRENGTH AT ROOM TEMPERATURE
3. FINISH: PASSIVATED PER QQ-P-35
4. SURFACE TEXTURE: PER ANSI 846.1
5. FLUORESCENT PENETRANT INSPECTION PER MIL-I-6866
6. PERFORMANCE: PER MIL-B-8906 EXCEPT AS FOLLOWS:
   - (a) HEAT TREATMENT, CADMIUM COATING, CARBURIZATION AND NITROGENIZATION, HARDNESS, MAGNETIC PARTICLE INSPECTION, TRAVERSE HARDNESS, COATING ADHESION AND SALT SPRAY REQUIREMENTS DO NOT APPLY.
   - (b) STRESS RUPTURE VALUES AS TABULATED IN TABLE I.
   - (c) ELEVATED TEMPERATURE TENSILE STRENGTH VALUES AS TABULATED IN TABLE I.

NOTES:

1. DIMENSIONS IN INCHES, UNLESS OTHERWISE SPECIFIED. TOLERANCES: DECIMALS ± .010. ANGLE: ± 2°
2. DESIGN AND USAGE INFORMATION: THESE BOLTS ARE DESIGNED TO BE USED WITH MS14182 NUTS AND MS14183 WASHERS.
3. REFERENCE DIMENSIONS ARE FOR DESIGN PURPOSES ONLY AND ARE NOT INSPECTION OR MANUFACTURING REQUIREMENTS.
4. GRIP LENGTH OF BOLT SHALL BE MEASURED FROM UNDERSIDE OF HEAD TO THE END OF FULL CYLINDRICAL PORTION OF SHANK.
5. WRENCHING ELEMENT PER MS33787. WRENCHES PER MIL-W-8982.
6. DIAMETER DASH NO. AT TOP OF TABLE 11, PLUS GRIP DASH NO. CONSTITUTES A COMPLETE PART NUMBER OF A GIVEN BOLT.
7. ADD LETTER "H" BEFOR DASH NO. TO DESIGNATE DRILLED HEAD. FIRST TWO DASH NUMBERS DESIGNATE DIAMETER IN SIXTEENTHS. LAST THREE DASH NUMBERS DESIGNATE GRIP LENGTH IN SIXTEENTHS.
8. UNASSIGNED DASH NOS. SHALL NOT BE USED.
9. EXAMPLES OF PART NUMBER: MS14181 = 2500-28 BOLT, 1.510 LONG, 1.000 GRIP, UNDRILLED HEAD (A)
   MS14181H04016 = .2500-28 BOLT, 1.510 LONG, 1.000 GRIP, DRILLED HEAD.
10. FOR DESIGN PURPOSES, THIS STANDARD TAKES PRECEDENCE OVER PROCUREMENT DOCUMENTS REFERENCED HEREIN.
11. REFERENCED DOCUMENTS SHALL BE OF THE ISSUE IN EFFECT ON DATE OF INVITATIONS FOR BID OR REQUEST FOR PROPOSAL EXCEPT THAT REFERENCED ADOPTED INDUSTRY DOCUMENTS SHALL GIVE THE DATE OF THE ISSUE ADOPTED.

REVISED AND REDRAWN (A) DENOTES CHANGE

APPROVED 15 JUNE 78 REVISED (A) 12 MAR 1981

This military standard is approved for use by all Departments & Agnecies of the Department of Defense. Selection for all new engineering and design applications and for repetitive use shall be made from this document.

"Reviewiuser information is current as of the date of this document. For future coordination of changes to this document, draft circulation should be based on the information in the current DD155."

P.A. NAVY - AS Other Cust USAF- 11 ARMY- AV	TITLE BOLT, TENSION, INCONEL, 220 KSI Ftu, 800°F EXTERNAL WRENCHING, SPLINE DRIVE, FLANGED HEAD	MILITARY STANDARD MS 14181
PROCUREMENT SPECIFICATION MIL-B-8906	SUPERSEDES	SHEET 1 OF 4

TABLE I

DIA DASH NO.	NOMINAL SIZE	THREAD UNJF-3A	A-DIA		B-DIA		C WRENCHING ELEMENT	D-DIA	
			MAX	MIN	MAX	MIN		MAX	MIN
03	NO. 10	.1900-32	.359	.349	.188	.173	8	.1895	.1885
04	1/4	2500-28	.470	.460	.250	.235	10	.2495	.2485
05	5/16	.3125-24	.585	.575	.375	.360	12	.3120	.3110
06	3/8	.3750-24	.701	.691	.438	.423	14	.3745	.3735
07	7/16	.4375-20	.817	.807	.500	.485	16	.4370	.4360
08	1/2	.5000-20	.932	.922	.562	.547	20	.4995	.4985
09	9/16	.5625-18	1.047	1.037	.625	.610	22	.5615	.5605
10	5/8	.6250-18	1.163	1.153	.688	.673	24	.6240	.6230

TABLE I CONT'D

DIA DASH NO.	E MIN	H +/- .010	J -DIA +.101 -.030	K +/- .005	M	Q		R-RAD.		T MIN REF
						MAX	MIN	MAX	MIN	
03	.113	.205	.100	.037	.062	.037	.017	.022	.016	.408
04	.149	.250	.125			.046	.026	.028	.022	.495
05	.187	.312	.215	.065	.070	.055	.035	.035	.029	.589
06	.224	.337	.260			.064	.044	.043	.033	.659
07	.262	.393	.320			.073	.053	.049	.039	.763
08	.299	.450	.380		.094	.032	.062	.055	.045	.838
09	.336	.505	.440			.091	.071	.061	.051	.935
10	. 374	.562	.500			.100	.080	.068	.058	1.005

TABLE I CONT'D

DIA DASH NO.	U REF	BEARING AREA (MEAN DIA) SQ. IN.	(A) TENSILE STRENGTH (A)			(A) DOUBLE SHEAR STRENGTH LB. MIN	(A) STRESS RUPTURE AT 800°F (LBS.)	TOLERANCE	
			ROOM TEMPERATURE		AT 800°F			X	Z
			MAX. (LBS.)	MIN. (LBS.)	MIN. (LBS.)				
03	.039	.0517	5,640	4,770	3,810	7,100	2,670	.004	.004
04	.045	.0914	10,800	8,540	6,830	12,300	4,780	.005	
05	.052	.1442	15,960	13,500	10,800	19,200	7,560	.006	
06		.2106	24,700	20,900	16,720	27,650	11,700	.008	
07	.063	.2896	33,480	28,300	22,640	37,600	15,840	.009	.006
08		.3786	44,640	37,800	30,240	49,100	21,160	.010	
09	.089	.4808	56,570	47,900	38,320	62,150	26,820	.011	
10		.5945	70,820	59,900	47,920	76,700	33,540	.012	

USER SYMBOLS: ARMY - MI

REVIEWER SYMBOLS: DLA - IS, ARMY - AT, USAF - 99

"Reviewer/user information is current as of the date of this document. For future coordination of changes to this document, draft circulation should be based on the information in the current DD155."

This military standard is approved for use by all Departments & Agencies of the Department of Defense. Selection for all new engineering and design applications and for repetitive use shall be made from this document.

APPROVED 15 JUNE 78 REVISED (A) FOR CHANGES SEE SHEETS 1 AND 2

USER SYMBOLS:
ARMY - MI

REVIEWER SYMBOLS:
DLA - IS
ARMY - AT
USAF - 99

TABLE II

GRIP DASH NO.	GRIP ± .010	DIAMETER DASH NUMBERS							
		03	04	05	06	07	08	09	10
		LENGTH ± .015							
004	.250	0.683	0.770	0.864	0.934	1.038	1.113	1.210	1.280
006	.375	0.808	0.845	0.989	1.059	1.163	1.238	1.335	1.405
008	.500	0.933	1.020	1.114	1.184	1.288	1.363	1.460	1.530
010	.625	1.058	1.145	1.239	1.309	1.413	1.488	1.585	1.655
012	.750	1.183	1.270	1.364	1.434	1.538	1.613	1.710	1.780
014	.875	1.308	1.395	1.489	1.559	1.663	1.738	1.835	1.905
016	1.000	1.433	1.520	1.614	1.684	1.778	1.863	1.960	2.030
018	1.125	1.558	1.645	1.739	1.809	1.913	1.988	2.085	2.155
020	1.250	1.683	1.770	1.864	1.934	2.038	2.113	2.210	2.280
022	1.375	1.808	1.895	1.989	2.059	2.163	2.238	2.335	2.405
024	1.500	1.933	2.020	2.114	2.184	2.288	2.363	2.460	2.530
026	1.625	2.058	2.145	2.239	2.309	2.413	2.488	2.585	2.655
028	1.750	2.183	2.270	2.364	2.434	2.538	2.613	2.710	2.780
030	1.875	2.308	2.395	2.489	2.559	2.663	2.738	2.835	2.905
032	2.000	2.433	2.520	2.614	2.694	2.788	2.863	2.960	3.030
034	2.125	2.558	2.645	2.731	2.809	2.913	2.988	3.085	3.155
036	2.250	2.683	2.770	2.864	2.934	3.083	3.113	3.210	3.280
038	2.375	2.808	2.895	2.989	3.059	3.163	3.238	3.335	3.405
040	2.500	2.933	3.020	3.114	3.184	3.288	3.363	3.460	3.530
042	2.625	3.058	3.145	3.239	3.309	3.413	3.488	3.585	3.655
044	2.750	3.183	3.270	3.364	3.434	3.538	3.613	3.710	3.780
046	2.875	3.308	3.395	3.489	3.559	3.663	3.738	3.835	3.905
048	3.000	3.433	3.520	3.614	3.684	3.788	3.863	3.960	4.030
050	3.125	3.558	3.645	3.739	3.809	3.413	3.988	4.085	4.155
052	3.250	3.683	3.770	3.864	3.934	4.038	4.113	4.210	4.280
054	3.375	3.808	3.895	3.989	4.059	4.163	4.238	4.335	4.405
056	3.500	3.933	4.020	4.114	4.184	4.288	4.363	4.460	4.530
058	3.625	4.058	4.125	4.239	4.309	4.413	4.488	4.585	4.655
060	3.750	4.183	4.270	4.364	4.434	4.538	4.613	4.710	4.780
062	3.875	4.308	4.395	4.489	4.559	4.663	4.738	4.835	4.905
064	4.000	4.433	4.520	4.614	4.684	4.788	4.863	4.960	5.030
068	4.250	4.558	4.645	4.739	4.809	4.913	4.988	5.085	5.155
070	4.375	4.683	4.770	4.864	4.934	5.038	5.113	5.210	5.280
072	4.500	4.808	4.895	4.989	5.059	5.163	5.238	5.335	5.405

"Reviewer/user information is current as of the date of this document. For future coordination of changes to this document, draft circulation should be based on the information in the current DD155."

This military standard is approved for use by all Departments & Agencies of the Department of Defense. Selection for all new engineering and design applications and for repetitive use shall be made from this document.

APPROVED 15 JUNE 78 REVISED (A) FOR CHANGES SEE SHEETS 1 AND 2

TABLE II CONT'D

GRIP DASH NO.	GRIP ± .010	DIAMETER DASH NUMBERS							
		03	04	05	06	07	08	09	10
		LENGTH ± .015							
074	4.625	4.933	5.020	5.114	5.184	5.288	5.363	5.460	5.530
076	4.750	5.058	5.145	5.239	5.309	5.413	5.488	5.585	5.655
078	4.875	5.183	5.270	5.364	5.434	5.538	5.613	5.710	5.780
080	5.000	5.308	5.395	5.489	5.559	5.663	5.738	5.835	5.905
082	5.125	5.433	5.520	5.614	5.684	5.788	5.863	5.960	6.030
084	5.250	5.558	5.645	5.739	5.809	5.913	5.988	6.085	6.155
086	5.375	5.683	5.770	5.864	5.934	6.038	6.113	6.210	6.280
088	5.500	5.808	5.895	5.989	6.059	6.163	6.238	6.335	6.405
090	5.625	5.933	6.020	6.114	6.184	6.288	6.363	6.460	6.530
092	5.750	6.058	6.145	6.239	6.309	6.413	6.488	6.585	6.655
094	5.875	6.183	6.270	6.364	6.434	6.538	6.613	6.710	6.780
096	6.000	6.308	6.395	6.489	6.559	6.663	6.738	6.835	6.905
098	6.125							6.960	7.030
100	6.250							7.085	7.155
102	6.375							7.210	7.280
104	6.500							7.335	7.405
106	6.625							7.460	7.530
108	6.750							7.585	7.655
110	6.875							7.710	7.780
112	7.000							7.835	7.905

USER SYMBOLS: ARMY - MI

REVIEWER SYMBOLS: DLA - IS ARMY - AT USAF - 99

"Reviewer/user information is current as of the date of this document. For future coordination of changes to this document, draft circulation should be based on the information in the current DD155."

This military standard is approved for use by all Departments & Agnecies of the Department of Defense. Selection for all new engineering and design applications and for repetitive use shall be made from this document.

APPROVED 15 JUNE 78 REVISED (A) FOR CHANGES SEE SHEETS 1 AND 2

USER SYMBOLS:
ARMY - MI

REVIEWER SYMBOLS:
DLA - IS
ARMY - AT

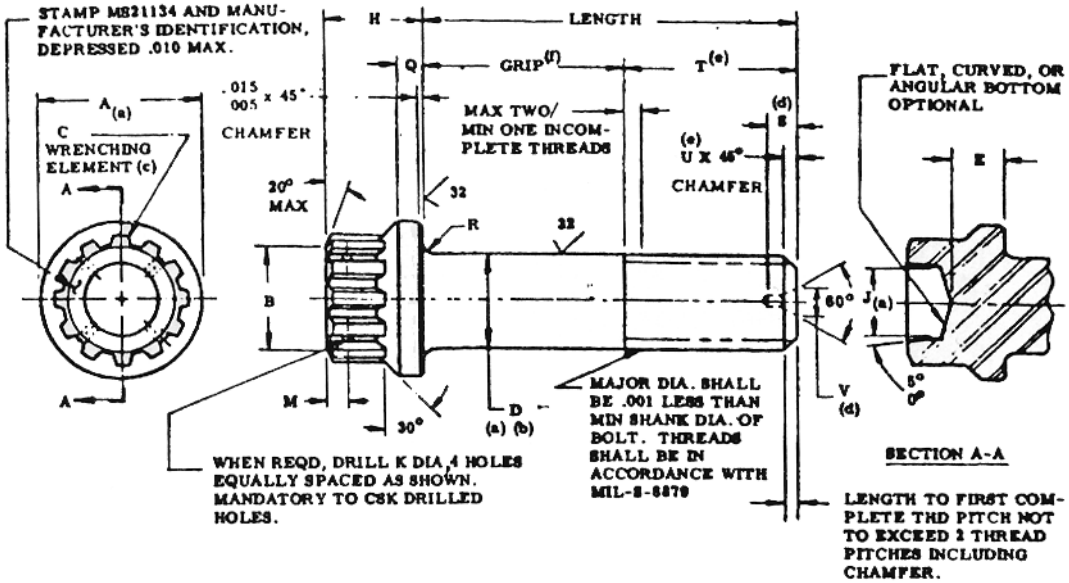

NOTES:

1. MATERIAL: ALLOY STEEL. MIL-8-5626 (AISI 4140), MIL-S-5000 (AISI 4340)
   MIL-5-6049 (AISI 8740), MIL-S-8503 (AISI 6150)
2. HARDNESS: ROCKWELL C39-43
3. SURFACE TEXTURE IN ACCORDANCE WITH ANSI (ASA) B46.1-1943.
4. PLATING: CADMIUM PER QQ-P-416, TYPE II, CLASS 3.
5. DIMENSIONS IN INCHES. UNLESS OTHERWISE SPECIFIED, TOLERANCES: DECIMALS ±.010, ANGLES = 2°.
6. DMIENSIONS TO BE MET AFTER PLATING.
7. DESIGN AND USAGE INFORMATION: THESE BOLTS ARE DESIGNED TO BE USED WITH MS21133 NUTS AND M921206 WASHERS.

"Reviewer/user information is current as of the date of this document. For future coordination of changes to this document, draft circulation should be based on the information in the current DD155."

This military standard is approved for use by all Departments & Agnecies of the Department of Defense. Selection for all new engineering and design applications and for repetitive use shall be made from this document.

FOR DESIGN FEATURE PURPOSES, THIS STANDARD TAKES PRECEDENCE OVER PROCUREMENT DOCUMENTS REFERENCED HEREIN.
REFERENCE DOCUMENTS SHALL BE OF THE ISSUE IN EFFECT ON DATE OF INVITATIONS FOR BID.

APPROVED 28 JAN 1972 REVISED

P.A. NAVY - AS Other Cust USAF - 11 ARMY - AV	TITLE BOLT, TENSION, STEEL, 180 KSI Ftu, 450°F EXTERNAL WRENCHING, SPLINE DRIVE, FLANGED	MILITARY STANDARD MS 21134
PROCUREMENT SPECIFICATION MIL-B-8831	SUPERSEDES	SHEET 1 OF 6

USER SYMBOLS:
ARMY - MI

REVIEWER SYMBOLS:
DLA - IS
ARMY - AT

DIA DASH NO.	NOMINAL SIZE	THREAD UNJF-3A	A-DIA (a)		B-DIA		C (c) WRENCHING ELEMENT	D-DIA (a) (b)		DIA DASH NO.
			MAX	MIN	MAX	MIN		MAX	MIN	
03	NO. 10	.1900-32	.359	.349	.188	.173	8	.1895	.1885	03
04	1/4	2500-28	.470	.460	.250	.235	10	.2495	.2485	04
05	5/16	.3125-24	.585	.575	.375	.360	12	.3120	.3110	05
06	3/8	.3750-24	.701	.691	.438	.423	14	.3745	.3735	06
07	7/16	.4375-20	.817	.807	.500	.485	16	.4370	.4360	07
08	1/2	.5000-20	.932	.922	.562	.547	20	.4995	.4985	08
09	9/16	.5625-18	1.047	1.037	.625	.610	22	.5615	.5605	09
10	5/8	.6250-18	1.163	1.153	.688	.673	24	.6240	.6230	10
12	3/4	.7500-16	1.394	1.584	.812	.797	28	.7490	.7490	12
14	7/8	.8750-14	1.625	1.615	.936	.923	32	.8740	.8730	14
16	1	1.0000-12	1.656	1.646	1.062	1.047	36	.9990	.9980	16
18	1 1/8	1.1250-12	2.067	2.077	1.250	1.235	42	1.1240	1.1225	18
20	1 1/4	1.2500-12	2.318	2.308	1.375	1.360	48	1.2490	1.2475	20
22	1 3/8	1.3750-12	2.549	2.559	1.500	1.485	52	1.3740	1.3725	22
24	1 1/2	1.5000-12	2.780	2.770	1.625	1.610	56	1.4990	1.4975	24

DIA DASH NO.	E MIN	H +/- .010	J (a) +.101 -.030	K ± .005	M	Q		R-RAD.		S MAX (d)	T MIN REF (e)	DIA DASH NO.
						MAX	MIN	MAX	MIN			
03	.113	.205	.100	.037	.062	.037	.017	.022	.016		.378	03
04	.149	.250	.125			.046	.026	.028	.022		.455	04
05	.187	.312	.215	.055	.070	.055	.035	.035	.029		.541	05
06	.224	.337	.260			.064	.044	.043	.033		.604	06
07	.262	.393	.320			.073	.053	.049	.039		.701	07
08	.299	.450	.380		.094	.082	.062	.055	.045		.763	08
09	.336	.505	.440			.091	.071	.061	.051		.847	09
10	.374	.562	.500			.100	.080	.068	.058		.910	10
12	.449	.600	.570			.118	.098	.080	.070	.200	1.063	12
14	.523	.700	.650		.125	.136	.116	.093	.083		1.223	14
16	.599	.800	.740			.154	.134	.105	.095	.260	1.396	16
18	.674	.900	.840			.172	.152	.118	.108		1.521	18
20	.749	1.000	1.070			.190	.170	.130	.120	.320	1.646	20
22	.824	1.100	1.140		.188	.208	.188	.145	.133		1.771	22
24	.899	1.200	1.200			.226	.206	.155	.145		1.896	24

"Reviewer/user information is current as of the date of this document. For future coordination of changes to this document, draft circulation should be based on the information in the current DD155."

This military standard is approved for use by all Departments & Agencies of the Department of Defense. Selection for all new engineering and design applications and for repetitive use shall be made from this document.

APPROVED 28 JAN 1972 REVISED

USER SYMBOLS: ARMY - MI

REVIEWER SYMBOLS: DLA - IS ARMY - AT

DIA DASH NO.	U REF (e)	V MAX (d)	CENTER DRILL SIZE (d)	BEARING AREA MEAN DIA SQ. IN.	ULTIMATE TENSILE STRENGTH LB. MIN.	DOUBLE SHEAR STRENGTH LB. MIN.	CONCENTRICITY		DIA DASH NO.
							% (a)	% (b)	
03	.039			.0517	3,910	6,100	.004	.0045	03
04	.045			.0914	6,960	10,600	.005		04
05	.052			.1442	11,100	16,600	.004		05
06				.2106	17,100	23,900	.008		06
07	.063			.2895	23,200	32,500	.008	.0089	07
08				.3786	30,900	42,400	.010		08
09	.069			.4608	39,200	53,700	.011		09
10				.5945	49,100	66,300	.012		10
12	.078	.187	2	.7512	71,000	95,400	.015		12
14	.089			1.1673	97,000	129,900	.016	.0090	14
16	.104	.250	3	1.5465	126,000	169,600	.020		16
18				1.9438	168,000	214,700	.022		18
20		.312	4	2.4020	202,000	265,100	.025		20
22				2.4060	246,000	320,700	.028	.0120	22
24				2.4638	294,000	381,700	.030		24

NOTES:
(a) DIMENSIONS A, D, AND J SHALL BE CONCENTRIC TO EACH OTHER WITHIN VALUES SPECIFIED FOR X T.I.R.
(b) DIMENSIONS D AND THREAD PITCH DIAMETER SHALL BE CONCENTRIC TO EACH OTHER WITHIN VALUES SPECIFIED PER Z T.I.R.
(c) WRENCHING ELEMENT PER M833787. DRIVERS PER MIL-W-8982.
(d) ON BOLTS SIZES .750 INCH AND LARGER, CENTER DRILLING OF SHANK IS OPTIONAL.
(e) REFERENCE DIMENSIONS ARE FOR DESIGN PURPOSES ONLY AND ARE NOT INSPECTION OR MANUFACTURING REQUIREMENTS.
(f) GRIP LENGTH OF BOLT SHALL BE MEASURED FROM UNDERSIDE OF HEAD TO THE END OF FULL CYLINDRICAL PORTION OF SHANK.

"Reviewer/user information is current as of the date of this document. For future coordination of changes to this document, draft circulation should be based on the information in the current DD155."

This military standard is approved for use by all Departments & Agencies of the Department of Defense. Selection for all new engineering and design applications and for repetitive use shall be made from this document.

APPROVED 28 JAN 1972 REVISED

This military standard is approved for use by all Departments & Agnecies of the Department of Defense. Selection for all new engineering and design applications and for repetitive use shall be made from this document.

"Review/user information is current as of the date of this document. For future coordination of changes to this document, draft circulation should be based on the information in the current DD155."

REVIEWER SYMBOLS:
DLA - IS
ARMY - AT

USER SYMBOLS:
ARMY - MI

Fairchild Fasteners

FED. SUP CLASS
5306

GRIP DASH NO.	GRIP + .010	DIAMETER DASH NUMBERS														
		03	04	05	06	07	08	09	10	12	14	16	18	20	22	24
		LENGTH ±.015														
003	.188	.580	.658	.744	.806	.904	.966									
004	.250	.643	.720	.806	.869	.966	1.028									
005	.312	.706	.782	.868	.932	1.028	1.090	1.174	1.238	1.390						
006	.375	.768	.845	.931	.994	1.091	1.153	1.237	1.300	1.453						
007	.438	.830	.908	.994	1.056	1.154	1.216	1.300	1.362	1.516	1.676	1.848	1.974			
008	.500	.893	.970	1.056	1.116	1.216	1.278	1.362	1.425	1.578	1.738	1.911	2.036			
009	.562	.956	1.032	1.116	1.181	1.278	1.340	1.424	1.488	1.640	1.800	1.974	2.098	2.224	2.348	2.474
010	.625	1.018	1.095	1.181	1.244	1.341	1.403	1.487	1.550	1.703	1.863	2.036	2.161	2.280	2.411	2.536
011	.688	1.080	1.158	1.244	1.306	1.404	1.466	1.550	1.612	1.766	1.926	2.098	2.224	2.348	2.474	2.598
012	.750	1.143	1.220	1.306	1.369	1.455	1.528	1.612	1.675	1.828	1.988	2.161	2.286	2.411	2.536	2.661
013	.812	1.206	1.282	1.365	1.432	1.528	1.590	1.674	1.735	1.890	2.050	2.224	2.348	2.474	2.598	2.724
014	.875	1.268	1.345	1.431	1.494	1.591	1.653	1.737	1.800	1.953	2.113	2.286	2.411	2.536	2.661	2.785
015	.938	1.330	1.408	1.494	1.546	1.654	1.716	1.800	1.862	2.016	2.176	2.348	2.474	2.598	2.724	2.848
016	1.000	1.393	1.470	1.556	1.619	1.716	1.778	1.862	1.925	2.078	2.238	2.411	2.536	2.661	2.786	2.911
017	1.062	1.456	1.532	1.616	1.682	1.778	1.840	1.924	1.988	2.140	2.300	2.474	2.598	2.724	2.848	2.974
018	1.125	1.518	1.595	1.681	1.744	1.841	1.903	1.987	2.050	2.203	2.363	2.536	2.661	2.786	2.911	3.036
019	1.188	1.580	1.658	1.744	1.796	1.904	1.966	2.050	2.112	2.266	2.426	2.598	2.724	2.848	2.974	3.098
020	1.250	1.643	1.720	1.806	1.869	1.966	2.028	2.112	2.175	2.328	2.488	2.661	2.786	2.911	3.036	3.161
021	1.312	1.706	1.782	1.868	1.932	2.028	2.090	2.174	2.238	2.390	2.550	2.724	2.848	2.974	3.098	3.224
022	1.375	1.768	1.845	1.931	1.994	2.091	2.153	2.237	2.300	2.453	2.613	2.786	2.911	3.036	3.161	3.286
023	1.438	1.830	1.908	1.94	2.046	2.154	2.216	2.300	2.362	2.516	2.676	2.848	2.974	3.098	3.224	3.348
024	1.500	1.893	1.970	2.056	2.119	2.216	2.278	2.362	2.425	2.578	2.738	2.911	3.036	3.161	3.285	3.411
025	1.562	1.956	2.032	2.116	2.182	2.278	2.340	2.424	2.488	2.640	2.800	2.974	3.098	3.224	3.348	3.474
026	1.625	2.018	2.095	2.181	2.244	2.341	2.403	2.487	2.550	2.703	2.863	3.036	3.151	3.286	3.411	3.536
027	1.688	2.080	2.158	2.244	2.296	2.404	2.466	2.550	2.612	2.766	2.926	3.098	3.224	3.348	3.474	3.598
028	1.750	2.143	2.220	2.306	2.396	2.466	2.528	2.612	2.675	2.828	2.988	3.151	3.286	3.411	3.536	3.661
029	1.812	2.206	2.282	2.368	2.432	2.528	2.590	2.674	2.738	2.890	3.050	3.224	3.348	3.474	3.598	3.724
030	1.875	2.268	2.345	2.431	2.494	2.591	2.653	2.737	2.800	2.953	3.113	3.286	3.411	3.536	3.661	3.786
031	1.938	2.330	2.408	2.494	2.546	2.654	2.716	2.800	2.862	3.016	3.176	3.348	3.474	3.598	3.724	3.848
032	2.000	2.393	2.470	2.556	2.619	2.716	2.778	2.862	2.925	3.078	3.238	3.411	3.536	3.661	3.786	3.911
033	2.062	2.456	2.532	2.616	2.682	2.778	2.840	2.924	2.988	3.140	3.300	3.474	3.598	3.724	3.848	3.974
034	2.125	2.518	2.595	2.681	2.744	2.841	2.903	2.987	3.050	3.203	3.363	3.536	3.661	3.786	3.911	4.035
035	2.188	2.580	2.658	2.744	2.796	2.904	2.966	3.050	3.112	3.266	3.426	3.598	3.724	3.848	3.974	4.098
036	2.250	2.643	2.720	2.806	2.869	2.965	3.028	3.112	3.175	3.328	3.488	3.661	3.786	3.911	4.036	4.161

APPROVED 28 JAN 1972 REVISED

P.A. NAVY - AS
Other Cust
USAF- 11
ARMY- AV

PROCUREMENT SPECIFICATION
MIL-B-8831

SUPERSEDES

TITLE
BOLT, TENSION, STEEL, 180 KSI Ftu, 450°F
EXTERNAL WRENCHING,
SPLINE DRIVE, FLANGED

MILITARY STANDARD

MS 21134

SHEET 4 OF 6

REVIEWER SYMBOLS:
DLA - IS
ARMY - AT

USER SYMBOLS:
ARMY - MI

This military standard is approved for use by all Departments & Agnecies of the Department of Defense. Selection for all new engineering and design applications and for repetitive use shall be made from this document.

"Review\user information is current as of the date of this document. For future coordination of changes to this document, draft circulation should be based on the information in the current DD155."

GRIP DASH NO.	GRIP + .010	DIAMETER DASH NUMBERS														
		03	04	05	06	07	08	09	10	12	14	16	18	20	22	24
		LENGTH ±015														
037	2.312	2.706	2.782	2.868	2.932	3.028	3.090	3.174	3.238	3.390	3.550	3.724	3.848	3.974	4.098	4.224
038	2.375	2.768	2.845	2.931	2.994	3.091	3.153	3.237	3.300	3.453	3.613	3.786	3.911	4.036	4.161	4.286
039	2.438	2.830	2.908	2.994	3.046	3.154	3.216	3.300	3.362	3.516	3.676	3.848	3.974	4.098	4.224	4.348
040	2.500	2.893	2.970	3.056	3.119	3.216	3.276	3.362	3.425	3.578	3.738	3.911	4.036	4.161	4.286	4.411
041	2.562	2.956	3.032	3.118	3.182	3.278	3.340	3.424	3.488	3.640	3.800	3.974	4.098	4.224	4.348	4.474
042	2.625	3.018	3.095	3.181	3.244	3.341	3.403	3.487	3.550	3.703	3.863	4.036	4.161	4.286	4.411	4.536
043	2.688	3.080	3.158	3.244	3.296	3.404	3.466	3.550	3.612	3.766	3.926	4.098	4.224	4.345	4.474	4.598
044	2.750	1.143	3.220	3.306	3.369	3.455	3.528	3.612	3.675	3.828	3.988	4.161	4.286	4.411	4.536	4.661
045	2.812	3.206	3.282	3.368	3.432	3.528	3.590	3.674	3.738	3.890	4.050	4.224	4.348	4.474	4.598	4.724
046	2.875	3.268	3.345	3.431	3.494	3.591	3.653	3.737	3.800	3.953	4.113	4.286	4.411	4.536	4.661	4.786
047	2.938	3.330	3.408	3.494	3.546	3.654	3.716	3.800	3.862	4.016	4.176	4.348	4.474	4.598	4.724	4.848
048	3.000	3.393	3.470	3.556	3.619	3.716	3.778	3.842	3.925	4.078	4.238	4.411	4.536	4.661	4.786	4.911
049	3.062	3.456	3.532	3.618	3.682	3.778	3.840	3.924	3.988	4.140	4.300	4.474	4.598	4.724	4.848	4.974
050	3.125	3.518	3.595	3.681	3.744	3.841	3.903	3.987	4.050	4.203	4.363	4.536	4.661	4.786	4.911	5.036
051	3.188	3.580	3.658	3.744	3.796	3.904	3.966	4.050	4.112	4.266	4.426	4.598	4.724	4.846	4.974	5.098
052	3.250	3.543	3.720	3.806	3.869	3.955	4.028	4.112	4.175	4.328	4.488	4.661	4.786	4.911	5.036	5.141
053	3.312	3.706	3.782	3.868	3.932	4.028	4.090	4.174	4.238	4.390	4.550	4.724	4.848	4.974	5.098	5.224
054	3.375	3.768	3.845	3.931	3.994	4.091	4.153	4.237	4.300	4.453	4.613	4.786	4.911	5.036	5.161	5.286
055	3.438	3.830	3.908	3.994	4.046	4.154	4.216	4.300	4.362	4.516	4.676	4.848	4.974	5.098	5.224	5.348
056	3.500	3.893	3.970	4.056	4.119	4.216	4.278	4.362	4.425	4.578	4.738	4.911	5.036	5.161	5.286	5.411
057	3.562	3.956	4.032	4.118	4.182	4.276	4.340	4.424	4.488	4.640	4.800	4.974	5.098	5.224	5.348	5.474
058	3.625	4.016	4.095	4.181	4.244	4.341	4.403	4.487	4.550	4.703	4.863	5.034	5.161	5.286	5.411	5.536
059	3.688	4.080	4.158	4.244	4.296	4.404	4.466	4.550	4.612	4.766	4.926	5.098	5.224	5.348	5.474	5.598
060	3.750	4.143	4.220	4.306	4.369	4.466	4.528	4.612	4.675	4.828	4.968	5.161	5.286	5.411	5.536	5.661
061	3.812	4.206	4.282	4.368	4.432	4.528	4.590	4.674	4.738	4.890	5.050	5.224	5.348	5.474	5.598	5.724
062	3.875	4.268	4.345	4.431	4.494	4.591	4.653	4.737	4.800	4.953	5.113	5.266	5.411	5.536	5.661	5.786
063	3.938	4.330	4.408	4.494	4.546	4.654	4.716	4.800	4.862	5.016	5.176	5.348	5.474	5.598	5.724	5.848
064	4.000	4.393	4.470	4.556	4.619	4.716	4.776	4.862	4.925	5.078	5.236	5.411	5.536	5.661	5.786	5.911
066	4.125	4.516	4.595	4.681	4.744	4.841	4.903	4.987	5.050	5.203	5.363	5.536	5.661	5.788	5.911	6.036
068	4.250	4.643	4.720	4.806	4.869	4.965	5.028	5.112	5.175	5.328	5.488	5.661	5.786	5.911	6.036	6.161
070	4.375	4.768	4.845	4.931	4.994	5.091	5.153	5.237	5.300	5.453	5.613	5.786	5.911	6.036	6.161	6.286
072	4.500	4.893	4.970	4.056	5.119	5.216	5.278	5.362	5.425	5.578	5.738	5.911	6.036	6.161	6.286	6.411
074	4.625	5.018	5.095	5.181	5.224	5.341	5.403	5.487	5.550	5.703	5.843	6.036	6.161	6.284	6.411	6.536

APPROVED 28 JAN 1972 REVISED

P.A. NAVY - AS
Other Cust
USAF- 11
ARMY- AV

PROCUREMENT SPECIFICATION
MIL-B-8831

SUPERSEDES

TITLE
BOLT, TENSION, STEEL, 180 KSI Ftu, 450°F
EXTERNAL WRENCHING,
SPLINE DRIVE, FLANGED

MILITARY STANDARD

MS 21134

SHEET 5 OF 6

This military standard is approved for use by all Departments & Agnecies of the Department of Defense. Selection for all new engineering and design applications and for repetitive use shall be made from this document.

"Review\user information is current as of the date of this document. For future coordination of changes to this document, draft circulation should be based on the information in the current DD155."

REVIEWER SYMBOLS:
DLA - IS
ARMY - AT

USER SYMBOLS:
ARMY - MI

Fairchild Fasteners

FED. SUP CLASS
5306

GRIP DASH NO.	GRIP + .010	DIAMETER DASH NUMBERS														
		03	04	05	06	07	08	09	10	12	14	16	18	20	22	24
		LENGTH ±.015														
076	4.750	5.143	5.220	5.306	5.369	5.466	5.528	5.612	5.675	5.828	5.988	6.161	6.286	6.411	6.536	6.661
078	4.975	5.268	5.345	5.431	5.494	5.591	5.591	5.737	5.800	5.953	6.113	6.286	6.411	6.536	6.661	6.786
080	5.000	5.393	5.470	5.556	5.619	5.716	5.716	5.862	5.925	6.078	6.238	6.411	6.536	6.661	6.786	6.911
082	5.125	5.518	5.595	5.681	5.744	5.841	5.841	5.987	6.050	6.203	6.363	6.536	6.661	6.786	6.911	7.036
084	5.250	5.643	5.720	5.806	5.869	5.966	5.966	6.112	6.175	6.328	6.488	6.661	6.786	6.911	7.036	7.161
086	5.375	5.768	5.845	5.931	5.994	6.091	6.091	6.237	6.300	6.453	6.613	6.708	6.911	7.036	7.161	7.285
088	5.500	5.893	5.970	6.058	6.119	6.216	6.216	6.362	6.425	6.578	6.738	6.911	7.036	7.161	7.286	7.411
090	5.625	6.018	6.095	6.181	6.244	6.341	6.341	6.487	6.550	6.703	6.863	7.036	7.161	7.286	7.411	7.536
092	5.750	6.143	6.220	6.306	6.389	6.466	6.466	6.612	6.675	6.828	6.998	7.161	7.286	7.411	7.536	7.661
094	5.875	6.268	6.345	6.431	6.494	6.591	6.591	6.737	6.800	6.953	7.113	7.286	7.411	7.536	7.661	7.786
096	6.000	6.393	6.470	6.556	6.619	6.716	6.716	6.862	6.925	7.078	7.238	7.411	7.536	7.661	7.786	7.911
098	6.125							6.987	7.050	7.203	7.363	7.536	7.661	7.786	7.911	8.036
100	6.250							7.112	7.175	7.328	7.488	7.661	7.786	7.911	8.036	8.161
102	6.375							7.237	7.300	7.453	7.613	7.786	7.911	8.036	8.161	8.266
104	6.500							7.362	7.425	7.578	7.738	7.911	8.036	8.161	8.288	8.411
106	6.625							7.487	7.550	7.703	7.863	8.036	8.161	8.286	8.411	8.536
108	6.750							7.612	7.675	7.828	7.988	8.161	8.286	8.411	8.536	8.661
110	6.875							7.737	7.800	7.953	8.113	8.286	8.411	8.536	8.661	8.786
112	7.000							7.862	7.925	8.078	8.238	8.411	8.536	8.661	8.786	8.911
114	7.125												8.661	8.788	8.911	9.036
116	7.250												8.786	8.911	9.036	9.161
118	7.375												8.911	9.036	9.161	9.288
120	7.500												9.036	9.161	9.286	9.411
122	7.625												9.161	9.286	9.411	9.538
124	7.750												9.286	9.411	9.530	9.661
126	7.875												9.411	9.536	9.681	9.788
128	8.000												9.536	9.661	9.786	9.997

DIAMETER DASH NO. AT TOP OF TABLE, PLUS GRIP DASH NO. FIRST COLUMN ON LEFT OF TABLE CONSTITUTES A COMPLETE DASH NO. IDENTIFYING SPECIFIED LENGTHS OF A GIVEN SIZE BOLT.
ADD LETTER "H" BEFORE DASH NO. TO DESIGNATE DRILLED HEAD. FIRST TWO DASH NUMBERS DESIGNATE DIAMETER IN SIXTEENTHS. LAST THREE DASH NUMBERS DESIGNATE GRIP LENGTH IN SIXTEENTHS.
UNASSIGNED DASH NUMBERS SHALL NOT BE USED.

EXAMPLES OF PART NUMBER:		
MS21134-04008	1	4 - 28 BOLT, .970 LONG, .500 GRIP, UNDRILLED HEAD.
MS21134H04008	1	4 - 28 BOLT, .970 LONG, .500 GRIP, DRILLED HEAD.
MS21134H05012	5	16 - 24 BOLT, 1.306 LONG, .750 GRIP, UNDRILLED HEAD.
MS21134H05012	5	16 - 24 BOLT, 1.306 LONG, .750 GRIP, DRILLED HEAD.

APPROVED 28 JAN 1972 REVISED

P.A. NAVY - AS
Other Cust
USAF- 11
ARMY- AV

PROCUREMENT SPECIFICATION
MIL-B-8831

SUPERSEDES

TITLE
BOLT, TENSION, STEEL, 180 KSI Ftu, 450°F
EXTERNAL WRENCHING,
SPLINE DRIVE, FLANGED

MILITARY STANDARD

MS 21134

SHEET 6 OF 6

PLATE NO 18326

DD FORM 1 MAR 92 672-1 (Coordinated)

PREVIOUS EDITIONS OF THIS FORM ARE OBSOLETE

US GOVERNMENT PRINTING OFFICE: 1973-714-542/3637

USER SYMBOLS: USAF - 11

REVIEWER SYMBOLS: DLA - IS ARMY - AV NAVY - AS

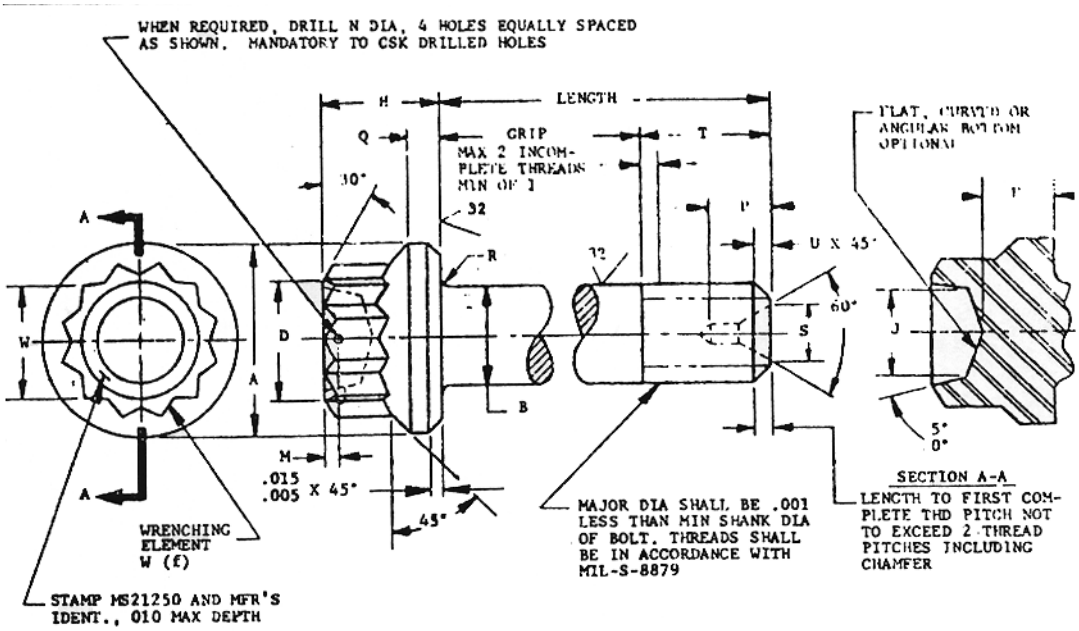

NOTES:

1. MATERIAL: STEEL ALLOY, MIL-S-5626 (AISI 4140) MIL-S-5000 (AISI 4340) MIL-S-6049 (AISI 8740) MIL-5-8503 (AISI 6150)
2. PLATING: CADMIUM PLATE IN ACCORDANCE WITH QQ-P-416, TYPE II CLASS 2. (CLASS 3 MAY BE USED UNTIL 1 JAN 1974)
3. SURFACE TEXTURE IN ACCORDANCE WITH ANSI (ASA) 846.1-1962. UNLESS OTHERWISE SPECIFIED, THE SURFACE TEXTURE SHALL NOT EXCEED 125 MICROINCHES.
4. DIMENSIONS IN INCHES, UNLES OTHERWISE SPECIFIED. TOLERANCES: DECIMALS ±.010, ANDLES ±2°.
5. DIMENSIONS TO BE MET AFTER PLATING.
6. TENSILE STRENGTH TO BE 180,000 TO 200,000 PSI.
7. DIAMETER DASH NO. AT TOP OF TABLE, SHEET 3, PLUS GRIP DASH NO. FIRST COLUMN ON LEFT OF TABLE CONSTITUTE A COMPLETE DASH NO. IDENTIFYING SPECIFIED LENGTHS OF A GIVEN SIZE OF BOLT.
8. ADD LETTER H BEFORE DASH NO. TO DESIGNATE DRILLED HEAD, FIRST TWO DASH NUMBERS DESIGNATE DIAMETER IN SIXTEENTHS, LAST THREE DASH NUMBERS DESIGNATE GRIP LENGTH IN SIXTEENTHS. UNASSIGNED DASH NUMBERS SHALL NOT BE USED.
   EXAMPLES OF PART NUMBERS:
   MS211250-04008 = .2500-28 BOLT, 1.012 LONG .500 GRIP, UNDRILLED HEAD
   MS21250H04008 = .2500-28 BOLT, 1.012 LONG .500 GRIP, DRILLED HEAD
   MS21250-05012 = .3125-24 BOLT, 1.349 LONG .750 GRIP, UNDRILLED HEAD
   MS21250H05012 = .3125-24 BOLT, 1.349 LONG .750 GRIP, DRILLED HEAD
   SEE TABLE ON SHEET 3 FOR GRIP DASH NUMBERS.
   GRIP LENGTH OF BOLT SHALL BE MEASURED FROM UNDERSIDE OF HEAD TO THE END OF FULL CYLINDRICAL PORTION OF THE SHANK.
9. HARDNESS: RC39-43

(H) ~~INACTIVE FOR NEW DESIGN AFTER 15 MARCH 1978, USE MS21134~~

(J) REACTIVATED FOR NEW DESIGN 19 SEPTEMBER 1980.

FOR DESIGN FEATURE PURPOSES, THIS STANDARD TAKES PRECEDENCE OVER PROCUREMENT DOCUMENTS REFERENCED HEREIN. REFERENCED DOCUMENTS SHALL BE OF THE ISSUE IN EFFECT ON DATE OF INVITATION FOR BID.

(K) DENOTES CHANGE

This military standard is approved for use by all Departments & Agnecies of the Department of Defense. Selection for all new engineering and design applications and for repetitive use shall be made from this document.

"Reviewer/user information is current as of the date of this document. For future coordination of changes to this document, draft circulation should be based on the information in the current DD155."

APPROVED 23 NOV 60 REVISED (K) 17 JUNE 1982

P.A. NAVY - AS Other Cust USAF- 11 ARMY- AV	TITLE BOLT, TENSION, STEEL, 180 KSI Ftu, 450°F 12- POINT, EXTERNAL WRENCHING FLANGED	MILITARY STANDARD MS 21250
PROCUREMENT SPECIFICATION MIL-B-8831	SUPERSEDES MS21250 (ASG)	SHEET 1 OF 3

REVIEWER SYMBOLS:
DLA - IS
ARMY - AV
NAVY - AS

USER SYMBOLS:
USAF - 11

This military standard is approved for use by all Departments & Agnecies of the Department of Defense. Selection for all new engineering and design applications and for repetitive use shall be made from this document.

"Review/user information is current as of the date of this document. For future coordination of changes to this document, draft circulation should be based on the information in the current DD155."

DIA DASH NO.	THREAD MIL-S-8879	A DIA	B DIA	NOM SIZE W	D DIA	E MIN	H	J +.010 -.030	M	N DIA +.005	(e) P MAX	Q	R	(e) S MAX (K)	(d) T MIN REF	U +.016	DRILL SIZE REF	CONCENTRICITY SEE (a), (b) & (c) X	Y	Z	DOUBLE SHEAR LBS. MIN	ULT TENSILE LBS MIN
02	.1642-32UNJC-3A	.300 .290	.1635 .1625	.2188	.219 .204	.076	.250	.100	.062	.037	-	.050	.041 .031	-	.385	.031	-	.004	.003	.003	4,600	2,950
03	.1900-32-UNJF-3A	.350 .340	.1895 .1885	.2500	.250 .235	.092	.265	.125			-	.055		-	.420		-			.0045	6,100	3,910
04	.2500-28UNJF-3A	.438 .428	.2495 .2485	.3125	.312 .297	.135	.300	.180			-	.069		-	.492		-	.005	.004		10,600	6,980
05	.3125-24UNJF-3A	.531 .521	.3120 .3110	.3750	.375 .360	.162	.348	.215	.070	.055	-	.082		-	.579	.047	-	.006	.005		16,600	11,100
06	.3750-24UNJF-3A	.649 .639	.3745 .3735	.4375	.437 .422	.197	.388	.260			-	.091	.057 .047	-	.625		-	.008	.006		23,900	17,100
07	.4375-20UNJF-3A	.750 .740	.4370 .4360	.5000	.500 .485	.228	.435	.320			-	.099		-	.721		-	.009	.008	.006	32,500	23,200
08	.5000-20UNJF-3A	.826 .818	.4995 .4985	.5625	.562 .547	.254	.504	.380	.094		-	.123		-	.768		-	.010			42,400	30,900
09	.5625-18UNJF-3A	.938 .928	.5615 .5605	.6250	.625 .610	.287	.557	.440			-	.133		-	.852	.062	-	.011	.009		53,700	39,200
10	.6250-18UNJF-3A	1.050 1.040	.6240 .6230	.6875	.687 .672	.327	.618	.500			-	.150	.073 .063	-	.899		-	.012	.010		66,300	49,000
12	.7500-16UNJF-3A	1.230 1.220	.7490 .7480	.8125	.812 .797	.380	.711	.570			.200	1.78		.187	1.036		2	.015	.012		95,400	71,100
14	.8750-1UNJF-3A	1.438 1.428	.8740 .8730	.9375	.937 .922	.438	.808	.650	.125		.260	.198			1.244	.078		.018	.014	.009	129,900	97,100
16	1.000-12UNJF-3A	1.625 1.615	.9990 .9980	1.0625	1.062 1.047	.493	.923	.740				.222		.250	1.479		3	.020	.016		169,600	126,000
18	1.1250-12UNJF-3A	1.875 1.865	1.1240 1.1225	1.2500	1.250 .1235	.556	1.051	.840			.320	.258			1.650	.094		.022	.019		214,700	162,000
20	1.2500-12UNJF-3A	2.125 2.115	1.2490 1.2475	1.3125	1.312 .1297	.636	1.155	.950				.269	.089 .077	.312	1.760		4	.025	.021		265,100	202,000
22	1.3750-12UNJF-3A	2.313 2.303	1.3740 1.3725	1.4375	1.437 1.422	.698	1.266	1.070	.188			.274			1.885			.028	.023	.012	320,700	247,000
24	1.500-12UNJF-3A	2.500 2.490	1.4990 1.4975	1.6250	1.625 1.610	.750	1.434	1.200				.335			2.010			.030	.025		381,700	296,000

(a) DIMENSIONS A, B AND J SHALL BE CONCENTRIC TO EACH OTHER WITHIN VALUES SPECIFIED FOR X TIR.
(b) DIMENSIONS W AND J SHALL BE CONCENTRIC TO EACH OTHER WITHIN VALUES SPECIFIED FOR Y TIR.
(c) DIMENSIONS B AND THREAD PITCH DIAMETER SHALL BE CONCENTRIC TO EACH OTHER WITHIN VALUES SPECIFIED FOR Z TIR.
(d) REFERENCE DIMENSIONS ARE FOR DESIGN PURPOSES ONLY AND ARE NOT AN INSPECTION OR MANUFACTURING REQUIREMENT. ONLY BOLTS FOR WHICH THERE ARE QUALIFIED PRODUCTS LISTED IN QPL8831 SHALL BE USED FOR DESIGN.
(f) WRENCHING ELEMENT SHALL BE IN ACCORDANCE WITH AS 870.

APPROVED 23 NOV 60 REVISED (K) FOR CHANGES SEE SHEETS 2 AND 3

Fairchild Fasteners

FED. SUP CLASS
5306

USER SYMBOLS:
USAF - 11

REVIEWER SYMBOLS:
DLA - IS
ARMY - AV
NAVY - AS

GRIP DASH NO.	GRIP ± .010	DIAMETER DASH NUMBERS															
		02	03	04	05	06	07	08	09	10	12	14	16	18	20	22	24
		LENGTH															
004	.250	.655	.690	.762	.849	.895	.991	1.038									
006	.375	.760	.815	.887	.974	1.020	1.116	1.163	1.247	1.294	1.431						
008	.500	.985	.940	1.012	1.099	1.145	1.241	1.288	1.372	1.419	1.556	1.764	1.999	2.170			
010	.625	1.050	1.065	1.137	1.224	1.270	1.366	1.413	1.497	1.544	1.681	1.889	2.124	2.295	2.405	2.530	2.655
012	.750	1.155	1.190	1.262	1.349	1.395	1.491	1.538	1.622	1.669	1.886	2.014	2.249	2.410	2.530	2.655	2.780
014	.875	1.280	1.315	1.387	1.474	1.520	1.616	1.663	1.747	1.794	1.931	2.139	2.374	2.545	2.655	2.780	2.905
016	1.000	1.405	1.440	1.512	1.589	1.645	1.741	1.778	1.872	1.919	2.056	2.264	2.499	2.670	2.780	2.905	3.030
018	1.125	1.530	1.565	1.637	1.724	1.770	1.866	1.913	1.997	2.044	2.181	2.389	2.624	2.795	2.905	3.030	3.155
020	1.250	1.655	1.690	1.762	1.849	1.895	1.991	2.038	2.122	2.169	2.306	2.514	2.749	2.920	3.080	3.155	3.280
022	1.375	1.780	1.815	1.887	1.974	2.020	2.116	2.163	2.247	2.294	2.431	2.639	2.874	3.045	3.155	3.280	3.405
024	1.500	1.905	1.940	2.012	2.099	2.145	2.241	2.288	2.372	2.419	2.556	2.764	2.999	3.170	3.280	3.405	3.530
026	1.625	2.030	2.065	2.137	2.224	2.270	2.366	2.413	2.497	2.544	2.681	2.889	3.124	3.295	3.405	3.530	3.655
028	1.750	2.155	2.190	2.262	2.349	2.395	2.491	2.538	2.622	2.669	2.806	3.014	3.249	3.420	3.530	3.655	3.780
030	1.875	2.280	2.315	2.387	2.474	2.520	2.616	2.663	2.747	2.794	2.931	3.139	3.374	3.545	3.655	3.780	3.905
032	2.000	2.405	2.440	2.512	2.599	2.645	2.741	2.788	2.872	2.919	3.056	3.264	3.499	3.670	3.780	3.905	4.030
034	2.125	2.530	2.565	2.637	2.724	2.770	2.866	2.913	2.997	3.044	3.181	3.389	3.624	3.795	3.905	4.030	4.155
035	2.187					2.833											
036	2.250	2.655	2.690	2.762	2.849	2.895	2.991	3.083	3.122	3.169	3.360	3.514	3.749	3.920	4.030	4.155	4.280
038	2.375	2.780	2.815	2.887	2.974	3.020	3.116	3.163	3.247	3.294	3.431	3.639	3.874	4.045	4.155	4.280	4.405
039	2.437							3.275									
040	2.500	2.905	2.940	3.012	3.099	3.145	3.241	3.288	3.372	3.419	3.556	3.764	3.999	4.170	4.280	4.405	4.530
042	2.625	3.030	3.065	3.137	3.224	3.270	3.366	3.413	3.497	3.544	3.681	3.889	4.124	4.295	4.405	4.530	4.655
044	2.750	3.155	3.190	3.262	3.349	3.395	3.491	3.538	3.622	3.669	3.806	4.014	4.249	4.420	4.530	4.655	4.780
046	2.875	3.280	3.315	3.387	3.474	3.520	3.616	3.663	3.747	3.794	3.931	4.139	4.374	4.545	4.655	4.780	4.905
048	3.000	3.405	3.440	3.512	3.599	3.645	3.741	3.788	3.872	3.919	4.056	4.264	4.499	4.670	4.780	4.905	5.030
050	3.125	3.570	3.565	3.637	3.724	3.770	3.866	3.913	3.997	4.044	4.181	4.389	4.624	4.795	4.905	5.030	5.155
052	3.250	3.655	3.690	3.762	3.849	3.895	3.991	4.038	4.122	4.169	4.306	4.514	4.749	4.920	5.030	5.155	5.280
054	3.375	3.780	3.815	3.887	3.974	4.020	4.116	4.163	4.247	4.294	4.431	4.639	4.874	5.045	5.155	5.280	5.405
056	3.500	3.908	3.940	4.012	4.099	4.145	4.241	4.288	4.372	4.419	4.556	4.764	4.999	5.170	5.280	5.405	5.530
058	3.625	4.030	4.065	4.137	4.224	4.270	4.366	4.413	4.497	4.544	4.681	4.889	5.124	5.295	5.405	5.530	5.655
060	3.750	4.155	4.190	4.262	4.349	4.395	4.491	4.538	4.622	4.669	4.806	5.014	5.249	5.420	5.530	5.655	5.780
062	3.875	4.280	4.315	4.387	4.474	4.520	4.616	4.663	4.747	4.794	4.931	5.139	5.374	5.545	5.655	5.780	5.905
064	4.000	4.405	4.440	4.512	4.599	4.645	4.741	4.788	4.872	4.919	5.056	5.264	5.499	5.670	5.780	5.905	6.030
066	4.125	4.530	4.565	4.637	4.724	4.770	4.866	4.913	4.997	5.044	5.181	5.389	5.624	5.795	5.905	6.030	6.155
068	4.250	4.655	4.690	4.762	4.849	4.895	4.991	5.038	5.122	5.169	5.306	5.514	5.749	5.920	6.030	6.155	6.280
070	4.375	4.780	4.815	4.887	4.974	5.020	5.116	5.163	5.247	5.294	5.431	5.639	5.874	6.045	6.155	6.280	6.405
072	4.500	4.905	4.940	5.012	5.099	5.145	5.241	5.288	5.372	5.419	5.556	5.764	5.999	6.170	6.280	6.405	6.530
074	4.625	5.030	5.065	5.137	5.224	5.270	5.366	5.413	5.497	5.544	5.681	5.889	6.124	6.295	6.405	6.530	6.655
076	4.750	5.155	5.190	5.262	5.349	5.395	5.491	5.538	5.622	5.669	5.806	6.014	6.249	6.420	6.530	6.655	6.780
078	4.875	5.280	5.315	5.387	5.474	5.520	5.616	5.663	5.747	5.794	5.931	6.139	6.374	6.545	6.655	6.780	6.905
080	5.000	5.405	5.440	5.512	5.599	5.645	5.741	5.788	5.872	5.919	6.056	6.264	6.499	6.670	6.780	6.905	7.030
082	5.125	5.530	5.565	5.637	5.724	5.770	5.866	5.913	5.997	6.044	6.181	6.389	6.624	6.795	6.905	7.030	7.155
084	5.250	5.655	5.690	5.762	5.849	5.895	5.991	6.038	6.122	6.169	6.306	6.514	6.749	6.920	7.030	7.155	7.280
086	5.375	5.780	5.815	5.887	5.974	6.020	6.116	6.163	6.247	6.294	6.431	6.639	6.874	7.045	7.155	7.280	7.405
088	5.500	5.905	5.940	6.012	6.099	6.145	6.241	6.288	6.372	6.419	6.556	6.764	6.999	7.170	7.280	7.405	7.530
090	5.625	6.030	6.065	6.137	6.224	6.270	6.366	6.413	6.497	6.544	6.681	6.889	7.124	7.295	7.405	7.530	7.655
092	5.750	6.155	6.190	6.262	6.349	6.395	6.491	6.538	6.622	6.669	6.800	7.014	7.249	7.420	7.530	7.655	7.780
094	5.875	6.280	6.315	6.387	6.474	6.520	6.616	6.663	6.747	6.794	6.931	7.139	7.374	7.545	7.655	7.780	7.905
096	6.000	6.405	6.440	6.512	6.599	6.645	6.741	6.788	6.872	6.919	7.056	7.264	7.499	7.670	7.780	7.905	8.030
098	6.125								6.997	7.044	7.181	7.389	7.624	7.795	7.905	8.030	8.155
100	6.250								7.122	7.169	7.306	7.514	7.749	7.920	8.030	8.155	8.280
102	6.375								7.247	7.284	7.431	7.639	7.874	8.045	8.155	8.280	8.405
104	6.500								7.372	7.419	7.556	7.764	7.999	8.170	8.280	8.405	8.530
106	6.625								7.497	7.544	7.681	7.889	8.124	8.295	8.405	8.516	8.655
108	6.750								7.622	7.669	7.806	8.014	8.249	8.420	8.530	8.655	8.780
110	6.875								7.747	7.794	7.931	8.739	8.374	8.545	8.655	8.780	8.905
112	7.000								7.872	7.919	8.056	8.264	8.499	8.670	8.780	8.905	9.030
114	7.125													8.795	8.905	9.030	9.155
116	7.250													8.920	9.030	9.155	9.280
118	7.375													9.045	9.155	9.280	9.405
120	7.500													9.170	9.280	9.405	9.530
122	7.625													9.295	9.405	9.530	9.655
124	7.750													9.420	9.530	9.655	9.780
126	7.875													9.545	9.655	9.780	9.905
128	8.000													9.670	9.780	9.905	10.030

"Reviewuser information is current as of the date of this document. For future coordination of changes to this document, draft circulation should be based on the information in the current DD155."

This military standard is approved for use by all Departments & Agnecies of the Department of Defense. Selection for all new engineering and design applications and for repetitive use shall be made from this document.

APPROVED 23 NOV 60 REVISED (K) FOR CHANGES SEE SHEETS 2 AND 3

P.A. NAVY - AS Other Cust USAF- 11 ARMY- AV	TITLE BOLT, TENSION, STEEL, 180 KSI Ftu, 450°F 12- POINT, EXTERNAL WRENCHING FLANGED	MILITARY STANDARD MS 21250
PROCUREMENT SPECIFICATION MIL-B-8831	SUPERSEDES MS21250 (ASG)	SHEET 3 OF 3

DD FORM 1 MAR 92 672-1 (Coordinated) PREVIOUS EDITIONS OF THIS FORM ARE OBSOLETE PLATE NO 23066

USER SYMBOLS: ARMY - MI

REVIEWER SYMBOLS: DLA - IS ARMY - AT

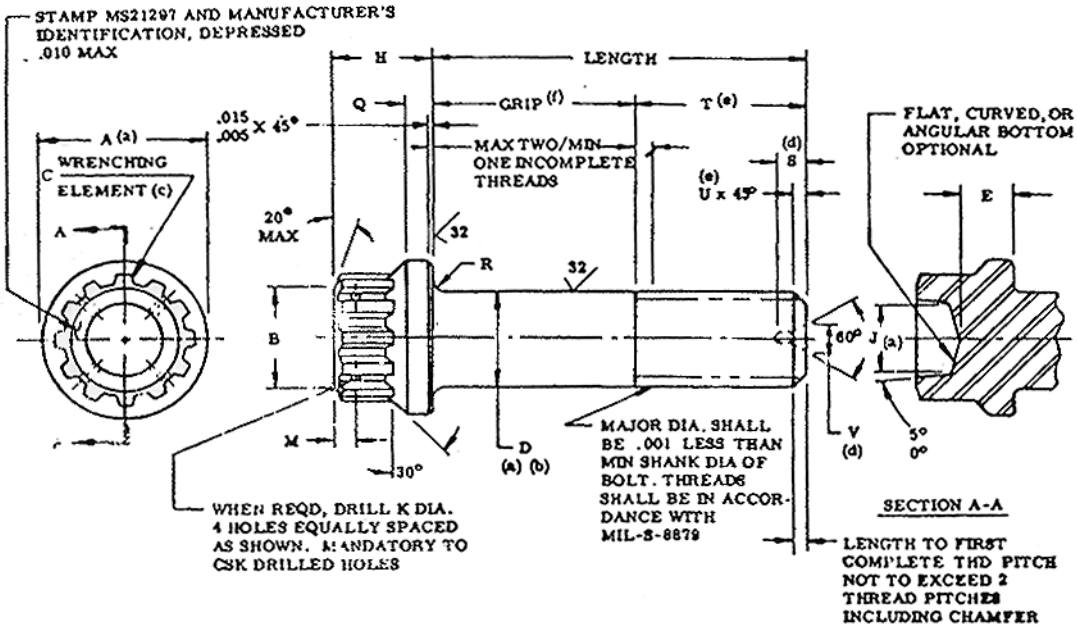

NOTES:

(A) 1. MATERIAL: ALLOY STEEL PER AMS 6487.
2. HARDNESS: ROCKWELL C48-50
3. SURFACE TEXTURE IN ACCORDANCE WITH ANSI (ASA) B46.1 - 1962.
4. PLATING: CADMIUM COATED (VACUUM DEPOSITED): MIL-C-8837, TYPE II, CLASS 2.
5. DIMENSIONS IN INCHES, UNLESS OTHERWISE SPECIFIED. TOLERANCES: DECIMALS ±.010, ANGLES ±2°.
6. DIMENSIONS TO BE MET AFTER PLATING.
7. DESIGN AND USAGE INFORMATION: THESE BOLTS ARE DESIGNED TO BE USED WITH MS21084 NUTS AND MS21206 WASHERS.

FOR DESIGN FEATURE PURPOSES THIS STANDARD TAKES PRECEDENCE OVER PROCUREMENT DOCUMENTS REFERENCED HEREIN. REFERENCED DOCUMENTS SHALL BE ON THE ISSUE IN EFFECT OF INVITATIONS FOR BID.

(A) REVISED

"Reviewer/user information is current as of the date of this document. For future coordination of changes to this document, draft circulation should be based on the information in the current DD155."

This military standard is approved for use by all Departments & Agencies of the Department of Defense. Selection for all new engineering and design applications and for repetitive use shall be made from this document.

APPROVED 28 JAN 1972 REVISED (A) 6 OCT 1975

P.A. NAVY - AS Other Cust USAF - 11 ARMY - AV	TITLE BOLT, TENSION, STEEL, 220 KSI Ftu, 450°F EXTERNAL WRENCHING, SPLINE DRIVE, FLANGED HEAD	MILITARY STANDARD MS 21297
PROCUREMENT SPECIFICATION MIL-B-8906	SUPERSEDES	SHEET 1 OF 6

USER SYMBOLS: ARMY - MI

REVIEWER SYMBOLS: DLA - IS ARMY - AT

DIA DASH NO.	NOMINAL SIZE	THREAD UNJF-3A	A-DIA (a)		B-DIA		C (c) WRENCHING ELEMENT	D-DIA (a) (b)		DASH NO.
			MAX	MIN	MAX	MIN		MAX	MIN	
03	NO. 10	.1900-32	.359	.349	.188	.173	8	.1895	.1885	03
04	1/4	.2500-28	.470	.460	.250	.235	10	.2495	.2485	04
05	5/16	.3125-24	.585	.575	.375	.360	12	.3120	.3110	05
06	3/8	.3750-24	.701	.691	.438	.423	14	.3745	.3735	06
07	7/16	.4375-20	.817	.807	.500	.485	16	.4370	.4360	07
08	1/2	.5000-20	.932	.922	.562	.547	20	.4995	.4985	08
09	9/16	.5625-18	1.047	1.037	.625	.610	22	.5615	.5605	09
10	5/8	.6250-18	1.163	1.153	.688	.673	24	.6240	.6230	10
12	3/4	.7500-16	1.394	1.384	.812	.797	28	.7490	.7480	12
14	7/8	.8750-14	1.625	1.615	.936	.923	32	.8740	.8730	14
16	1	1.0000-12	1.856	1.846	1.062	1.047	36	.9990	.9980	16
18	1 1/8	1.1250-12	2.087	2.077	1.250	1.235	42	1.1240	1.1225	18
20	1 1/4	1.2500-12	2.318	2.308	1.375	1.360	48	1.2490	1.2475	20
22	1 3/8	1.3750-12	2.549	2.559	1.500	1.485	52	1.3740	1.3725	22
24	1 1/2	1.5000-12	2.780	2.770	1.625	1.610	56	1.4990	1.4975	24

DIA DASH NO.	E MIN	H ± .010	J (a) +.101 -.030	K ± .005	M	Q		R-RAD.		S MAX (d)	T MIN REF (e)	DASH NO.
						MAX	MIN	MAX	MIN			
03	.113	.205	.100	.037	.062	.037	.017	.022	.016		.408	03
04	.149	.250	.125			.046	.026	.028	.022		.495	04
05	.187	.312	.215	.055	.070	.055	.035	.035	.029		.589	05
06	.224	.337	.260			.064	.044	.043	.033		.659	06
07	.262	.393	.320			.073	.053	.049	.039		.763	07
08	.299	.450	.380		.094	.082	.062	.055	.045		.838	08
09	.336	.505	.440			.091	.071	.061	.051		.935	09
10	.374	.562	.500			.100	.080	.068	.058		1.005	10
12	.449	.600	.570			.118	.098	.080	.070	.200	1.173	12
14	.523	.700	.650		.125	.136	.116	.093	.083		1.348	14
16	.599	.800	.740			.154	.134	.105	.095	.260	1.545	16
18	.674	.900	.840			.172	.152	.118	.108		1.696	18
20	.749	1.000	1.070			.190	.170	.130	.120	.320	1.836	20
22	.824	1.100	1.140		.188	.208	.188	.145	.133		1.976	22
24	.899	1.200	1.200			.226	.206	.155	.145		2.116	24

"Reviewer/user information is current as of the date of this document. For future coordination of changes to this document, draft circulation should be based on the information in the current DD155."

This military standard is approved for use by all Departments & Agencies of the Department of Defense. Selection for all new engineering and design applications and for repetitive use shall be made from this document.

APPROVED 28 JAN 1972 REVISED (A) FOR CHGS SEE SHT 1

USER SYMBOLS: ARMY - MI

REVIEWER SYMBOLS: DLA - IS ARMY - AT

DIA DASH NO.	U REF (e)	V MAX (d)	CENTER DRILL SIZE (d)	BEARING AREA MEAN DIA SQ. IN.	ULTIMATE TENSILE STRENGTH LB. MIN.	DOUBLE SHEAR STRENGTH LB. MIN.	CONCENTRICITY X (a)	CONCENTRICITY Z (b)	DASH NO.
03	.039			.0517	4,770	7,480	.004	.0045	03
04	.045			.0914	8,540	13,000	.005		04
05	.052			.1442	13,500	20,200	.004		05
06				.2106	20,900	29,100	.008		06
07	.063			.2896	28,300	39,700	.008	.0089	07
08				.3786	37,800	51,800	.010		08
09	.069			.4808	47,900	65,600	.011		09
10				.5945	59,900	81,000	.012		10
12	.078	.187	2	.7512	86,900	117,000	.015		12
14	.089			1.1673	119,000	159,000	.016	.0090	14
16	.104	.250	3	1.5465	155,000	207,000	.020		16
18				1.9438	198,000	262,000	.022		18
20		.312	4	2.4020	247,000	324,000	.025		20
22				2.9060	301,000	392,000	.028	.0120	22
24				3.4638	361,000	466,000	.030		24

(a) DIMENSIONS A, D AND J SHALL BE CONCENTRIC TO EACH OTHER WITHIN VALUES SPECIFIED FOR X T.I.R.
(b) DIMENSIONS D AND THREAD PITCH DIAMETER SHALL BE CONCENTRIC TO EACH OTHER WITHIN VALUES SPECIFIED PER Z T.I.R.
(c) WRENCHING ELEMENT PER MS33787. DRIVERS PER MIL-W-8982.
(d) ON BOLT SIZES .750 INCH AND LARGER, CENTER DRILLING OF SHANK IS OPTIONAL.
(e) REFERENCE DIMENSIONS ARE FOR DESIGN PURPOSES ONLY AND ARE NOT INSPECTION OR MANUFACTURING REQUIREMENTS.
(f) GRIP LENGTH OF BOLT SHALL BE MEASURED FROM UNDERSIDE OF HEAD TO THE END OF FULL CYLINDRICAL PORTION OF SHANK.

"Reviewer/user information is current as of the date of this document. For future coordination of changes to this document, draft circulation should be based on the information in the current DD155."

This military standard is approved for use by all Departments & Agencies of the Department of Defense. Selection for all new engineering and design applications and for repetitive use shall be made from this document.

APPROVED 28 JAN 1972 REVISED (A) FOR CHGS SEE SHT 1

REVIEWER SYMBOLS:
DLA - IS
ARMY - AT

USER SYMBOLS:
ARMY - MI

This military standard is approved for use by all Departments & Agnecies of the Department of Defense. Selection for all new engineering and design applications and for repetitive use shall be made from this document.

"Review\user information is current as of the date of this document. For future coordination of changes to this document, draft circulation should be based on the information in the current DD155."

GRIP DASH NO.	GRIP ±.010	DIAMETER DASH NUMBERS														
		03	04	05	06	07	08	09	10	12	14	16	18	20	22	24
		LENGTH +.015														
003	.188	.610	.698	.792	.862	.966	1.040	1.138	1.208	1.376	1.550	1.748	1.898	2.038	2.178	2.318
004	.250	.673	.760	.854	.924	1.028	1.103	1.200	1.270	1.438	1.613	1.811	1.961	2.101	2.241	2.381
005	.312	.736	.822	.915	.986	1.090	1.166	1.262	1.332	1.500	1.676	1.874	2.024	2.164	2.304	2.444
006	.375	.798	.885	.979	1.049	1.153	1.228	1.325	1.395	1.563	1.738	1.936	2.086	2.225	2.366	2.506
007	.438	.860	.948	1.042	1.112	1.216	1.290	1.388	1.458	1.626	1.800	1.998	2.148	2.288	2.428	2.588
008	.500	.923	1.010	1.104	1.174	1.278	1.353	1.450	1.520	1.688	1.863	2.061	2.211	2.351	2.491	2.631
009	.562	.986	1.072	1.166	1.236	1.340	1.416	1.512	1.582	1.750	1.926	2.124	2.274	2.414	2.554	2.694
010	.625	1.048	1.135	1.229	1.299	1.403	1.478	1.575	1.645	1.813	1.988	2.186	2.336	2.476	2.616	2.756
011	.688	1.110	1.198	1.292	1.362	1.486	1.540	1.638	1.708	1.876	2.050	2.248	2.398	2.538	2.678	2.818
012	.750	1.173	1.260	1.354	1.424	1.528	1.603	1.700	1.770	1.938	2.113	2.311	2.461	2.601	2.741	2.891
013	.812	1.236	1.322	1.415	1.486	1.590	1.668	1.762	1.882	2.000	2.176	2.374	2.524	2.664	2.804	2.944
014	.875	1.298	1.385	1.479	1.549	1.653	1.728	1.825	1.895	2.063	2.238	2.436	2.586	2.726	2.866	3.006
015	.938	1.360	1.448	1.542	1.612	1.716	1.790	1.888	1.958	2.126	2.300	2.498	2.648	2.788	2.928	SEE
016	1.000	1.423	1.510	1.604	1.574	1.778	1.853	1.950	2.020	2.188	2.363	2.561	2.711	2.851	2.991	ORIGINAL
017	1.062	1.486	1.572	1.668	1.736	1.840	1.916	2.012	2.082	2.250	2.426	2.624	2.774	2.914	3.054	3.194
018	1.125	1.548	1.635	1.729	1.799	1.903	1.978	2.075	2.145	2.313	2.488	2.686	2.836	2.976	3.116	3.256
019	1.188	1.610	1.698	1.792	1.862	1.966	2.040	2.138	2.208	2.375	2.550	2.748	2.898	3.038	3.178	3.318
020	1.250	1.673	1.760	1.854	1.924	2.028	2.103	2.200	2.270	2.438	2.613	2.811	2.961	3.101	3.241	3.381
021	1.312	1.736	1.822	1.915	1.986	2.090	2.166	2.262	2.332	2.500	2.676	2.874	3.024	3.164	3.304	3.444
022	1.375	1.798	1.885	1.979	2.049	2.153	2.228	2.325	2.395	2.563	2.736	2.936	3.086	3.226	3.366	3.506
023	1.438	1.860	1.948	2.042	2.112	2.216	2.290	2.388	2.458	2.626	2.800	2.998	3.148	3.288	3.428	3.508
024	1.500	1.923	2.010	2.104	2.174	2.278	2.353	2.450	2.520	2.688	2.863	3.061	3.211	3.351	3.491	3.631
025	1.562	1.986	2.072	2.166	2.236	2.340	2.416	2.512	2.582	2.750	2.926	3.124	3.274	3.414	3.554	3.694
026	1.625	2.048	2.135	2.229	2.299	2.403	2.478	2.575	2.645	2.813	2.988	3.186	3.336	3.476	3.616	3.756
027	1.688	2.110	2.198	2.292	2.362	2.466	2.540	2.638	2.708	2.876	3.050	3.248	3.398	3.538	3.678	3.818
028	1.750	2.173	2.260	2.354	2.424	2.528	2.603	2.700	2.770	2.938	3.113	3.311	3.461	3.601	3.741	3.881
029	1.812	2.236	2.322	2.416	2.486	2.590	2.666	2.762	2.832	3.000	3.176	3.374	3.524	3.664	3.804	3.944
030	1.875	2.298	2.385	2.479	2.549	2.653	2.728	2.825	2.895	3.063	3.238	3.436	3.586	3.726	3.866	4.006
031	1.938	2.360	2.448	2.542	2.612	2.716	2.790	2.888	2.958	3.126	3.300	3.498	3.648	3.788	3.928	4.068
032	2.000	2.423	2.510	2.604	2.674	2.778	2.853	2.950	3.020	3.188	3.363	3.561	3.711	3.851	3.991	4.131
033	2.062	2.486	2.572	2.666	2.736	2.840	2.916	3.012	3.082	3.250	3.426	3.624	3.774	3.914	4.054	4.194
034	2.125	2.548	2.635	2.729	2.799	2.903	2.978	3.075	3.145	3.313	3.488	3.686	3.836	3.976	4.116	4.256

APPROVED 28 JAN 1972 REVISED (A) FOR CHGS SEE SHT 1

P.A. NAVY - AS
Other Cust
USAF - 11
ARMY - AV

PROCUREMENT SPECIFICATION
MIL-B-8906

SUPERSEDES

TITLE
BOLT, TENSION, STEEL, 220 KSI Ftu, 450°F
EXTERNAL WRENCHING,
SPLINE DRIVE, FLANGED HEAD

MILITARY STANDARD

MS 21297

SHEET 4 OF 6

REVIEWER SYMBOLS:
DLA - IS
ARMY - AT

USER SYMBOLS:
ARMY - MI

This military standard is approved for use by all Departments & Agnecies of the Department of Defense. Selection for all new engineering and design applications and for repetitive use shall be made from this document.

"Review\user information is current as of the date of this document. For future coordination of changes to this document, draft circulation should be based on the information in the current DD155."

GRIP DASH NO.	GRIP ±.010	DIAMETER DASH NUMBERS														
		03	04	05	06	07	08	09	10	12	14	16	18	20	22	24
		LENGTH +.015														
035	2.188	2.610	2.698	2.792	2.862	2.966	3.040	3.138	3.208	3.376	3.550	3.748	3.898	4.308	4.178	4.318
036	2.250	2.673	2.760	2.854	2.924	3.028	3.103	3.200	3.270	3.438	3.613	3.811	3.961	4.101	4.241	4.381
037	2.312	2.726	2.822	2.916	2.986	3.090	3.166	3.262	3.332	3.500	3.676	3.874	4.024	4.164	4.304	4.444
038	2.375	2.798	2.885	2.979	3.049	3.153	3.228	3.325	3.395	3.563	3.738	3.936	4.086	4.226	4.366	4.506
039	2.438	2.860	2.946	3.042	3.112	3.216	3.290	3.388	3.458	3.626	3.800	3.998	4.148	4.288	4.428	4.568
040	2.500	2.923	3.010	3.104	3.174	3.278	3.353	3.450	3.520	3.688	3.863	4.061	4.211	4.351	4.491	4.631
041	2.562	2.986	3.072	3.166	3.236	3.340	3.416	3.512	3.582	3.750	3.926	4.124	4.274	4.414	4.554	4.694
042	2.625	3.048	3.135	3.229	3.299	3.403	3.478	3.575	3.645	3.813	3.988	4.186	4.336	4.476	4.616	4.756
043	2.688	3.110	3.198	3.292	3.362	3.466	3.540	3.638	3.708	3.876	4.050	4.248	4.398	4.538	4.678	4.818
044	2.750	3.173	3.260	3.354	3.424	3.528	3.603	3.700	3.770	3.938	4.113	4.311	4.461	4.601	4.741	4.881
045	2.812	3.236	3.322	3.416	3.486	3.590	3.666	3.762	3.832	4.000	4.176	4.374	4.524	4.664	4.804	4.944
046	2.875	3.298	3.385	3.479	3.549	3.653	3.728	3.825	3.895	4.063	4.238	4.436	4.586	4.726	4.866	5.006
047	2.938	3.360	3.448	3.542	3.612	3.716	3.790	3.888	3.958	4.126	4.300	4.498	4.648	4.788	4.928	5.068
048	3.000	3.423	3.510	3.604	3.674	3.778	3.853	3.950	4.020	4.188	4.363	4.561	4.711	4.851	4.991	5.131
049	3.062	3.486	3.572	3.666	3.736	3.840	3.916	4.012	4.082	4.250	4.426	4.624	4.774	4.914	5.054	5.194
050	3.125	3.548	3.635	3.729	3.799	3.903	3.978	4.075	4.145	4.313	4.488	4.686	4.836	4.976	5.116	5.256
051	3.188	3.610	3.698	3.792	3.862	3.968	4.040	4.138	4.208	4.376	4.550	4.748	4.898	5.038	5.178	5.318
052	3.250	3.673	3.760	3.854	3.924	4.028	4.103	4.200	4.270	4.438	4.613	4.811	4.961	5.101	5.241	5.381
053	3.312	3.736	3.822	3.916	3.986	4.090	4.166	4.262	4.332	4.500	4.676	4.874	5.024	5.186	5.304	5.444
054	3.375	3.798	3.885	3.979	4.049	4.153	4.228	4.325	4.395	4.563	4.738	4.936	5.086	5.226	5.366	5.506
055	3.438	3.860	3.948	4.042	4.114	4.216	4.290	4.388	4.458	4.626	4.800	4.998	5.148	5.288	5.428	5.568
056	3.500	3.923	4.010	4.104	4.174	4.278	4.353	4.450	4.520	4.688	4.863	5.061	5.211	5.351	5.491	5.631
057	3.562	3.986	4.072	4.166	4.236	4.340	4.416	4.512	4.582	4.750	4.926	5.124	5.274	5.414	5.554	5.694
058	3.625	4.048	4.135	4.229	4.299	4.403	4.478	4.575	4.645	4.813	4.988	5.186	5.336	5.476	5.616	5.756
059	3.688	4.110	4.198	4.292	4.362	4.466	4.540	4.638	4.708	4.876	5.050	5.248	5.398	5.538	5.678	5.818
060	3.750	4.173	4.260	4.354	4.424	4.528	4.603	4.700	4.770	4.983	5.113	5.311	5.461	5.601	5.741	5.881
061	3.812	4.236	4.322	4.416	4.486	4.590	4.666	4.762	4.832	5.000	5.176	5.374	5.524	5.664	5.804	5.944
062	3.875	4.298	4.385	4.479	4.549	4.653	4.728	4.825	4.895	5.063	5.238	5.436	5.586	5.726	5.866	6.006
063	3.938	4.360	4.448	4.542	4.612	4.716	4.790	4.888	4.958	5.126	5.300	5.498	5.648	5.788	5.928	6.068
064	4.000	4.423	4.510	4.604	4.674	4.776	4.853	4.950	5.020	5.188	5.363	5.561	5.711	5.891	5.991	6.131
066	4.125	4.548	4.635	4.729	4.799	4.903	4.978	5.075	5.145	5.313	5.488	5.686	5.836	5.976	6.116	6.256
068	4.250	4.673	4.760	4.854	4.924	5.028	5.103	5.200	5.270	5.438	5.613	5.811	5.961	6.101	6.241	6.381

APPROVED 28 JAN 1972 REVISED (A) FOR CHGS SEE SHT 1

P.A. NAVY - AS
Other Cust
USAF- 11
ARMY- AV

PROCUREMENT SPECIFICATION
MIL-B-8906

SUPERSEDES

TITLE
BOLT, TENSION, STEEL, 220 KSI Ftu, 450°F
EXTERNAL WRENCHING,
SPLINE DRIVE, FLANGED HEAD

MILITARY STANDARD

MS 21297

SHEET 5 OF 6

Fairchild Fasteners

GRIP DASH NO.	GRIP ±.010	DIAMETER DASH NUMBERS														
		03	04	05	06	07	08	09	10	12	14	16	18	20	22	24
		LENGTH +.015														
070	4.375	4.798	4.885	4.979	5.049	5.153	5.228	5.325	5.395	5.563	5.738	5.936	6.086	6.226	6.366	6.508
072	4.500	4.923	5.010	5.104	5.174	5.278	5.353	5.450	5.520	5.688	5.863	6.061	6.211	6.351	6.491	6.631
074	4.625	5.048	5.135	5.229	5.299	5.403	5.478	5.575	5.645	5.813	5.988	6.186	6.336	6.476	6.616	6.756
076	4.750	5.173	5.260	5.354	5.424	5.528	5.603	5.700	5.770	5.938	6.113	6.311	6.461	6.601	6.741	6.681
078	4.975	5.298	5.385	5.479	5.549	5.653	5.728	5.825	5.895	6.063	6.238	6.456	6.586	6.726	6.855	7.006
080	5.000	5.423	5.510	5.604	5.674	5.778	5.853	5.950	6.020	6.188	6.363	6.561	6.711	6.851	6.991	7.131
082	5.125	5.548	5.635	5.729	5.799	5.903	5.978	6.075	6.145	6.313	6.488	6.686	6.836	6.976	7.116	7.256
084	5.250	5.673	5.760	5.854	5.924	6.028	6.103	6.200	6.270	6.438	6.613	6.811	6.961	7.101	7.241	7.381
086	5.375	5.798	5.885	5.979	6.049	6.153	6.228	6.325	6.395	6.583	6.738	6.936	7.086	7.226	7.366	7.506
088	5.500	5.923	6.010	6.104	6.174	6.278	6.353	6.450	6.520	6.688	6.863	7.061	7.211	7.351	7.491	7.631
090	5.625	6.048	6.135	6.229	6.299	6.403	6.478	6.575	6.645	6.813	6.988	7.186	7.336	7.476	7.515	7.756
092	5.750	6.173	6.260	6.354	6.424	6.528	6.603	6.700	6.770	6.938	7.113	7.311	7.461	7.601	7.741	7.881
094	5.875	6.298	6.385	6.479	6.549	6.653	6.728	6.825	6.895	7.063	7.238	7.436	7.586	7.726	7.866	8.006
096	6.000	6.423	6.510	6.604	6.674	6.778	6.853	6.950	7.020	7.188	7.363	7.561	7.711	7.851	7.991	8.141
098	6.125							7.075	7.145	7.313	7.488	7.686	7.836	7.976	8.115	8.256
100	6.250							7.200	7.270	7.438	7.613	7.811	7.961	8.101	8.241	8.381
102	6.375							7.325	7.395	7.563	7.738	7.936	8.086	8.226	8.366	8.505
104	6.500							7.450	7.520	7.688	7.863	8.061	8.211	8.351	8.491	8.631
106	6.625							7.575	7.645	7.813	7.988	8.188	8.336	8.476	8.816	8.756
108	6.750							7.700	7.770	7.938	8.113	8.311	8.461	8.501	8.741	8.881
110	6.875							7.825	7.895	8.063	8.238	8.436	8.586	8.726	8.866	9.006
112	7.000							7.950	8.020	8.188	8.363	8.561	8.711	8.851	8.991	9.131

DIAMETER DASH NO. AT TOP OF TABLE, PLUS GRIP DASH NO. FIRST COLUMN ON LEFT OF TABLE CONSTITUTES A COMPLETE DASH IDENTIFYING SPECIFIED LENGTHS OF A GIVEN SIZE OF BOLT.

ADD LETTER "H" BEFORE DASH NO. TO DESIGNATE DRILLED HEAD. FIRST TWO DASH NUMBERS DESIGNATE DIAMETER IN SIXTEENTHS. LAST THREE DASH NUMBERS DESIGNATE GRIP LENGTH IN SIXTEENTHS.

UNASSIGNED DASH NOS. SHALL NOT BE USED.

EXAMPLES OF PART NUMBER:

MS21297-04016	=	1/4-28 BOLT, 1.510 LONG, 1.000 GRIP, UNDRILLED HEAD.
MS21297H04016	=	1/4-28 BOLT, 1.510 LONG, 1.000 GRIP, DRILLED HEAD.
MS21297-05020	=	5/16-24 BOLT, 1.854 LONG, 1.250 GRIP, DRILLED HEAD.
MS21297H05020	=	5/16-24 BOLT, 1.854 LONG, 1.250 GRIP, DRILLED HEAD.

APPROVED 28 JAN 1972 REVISED (A) FOR CHGS SEE SHT 1

FED. SUP CLASS
5306

MILITARY STANDARD

MS 21297

SHEET 6 OF 6

TITLE
BOLT, TENSION, STEEL, 220 KSI Ftu, 450°F
EXTERNAL WRENCHING,
SPLINE DRIVE, FLANGED HEAD

SUPERSEDES

PROCUREMENT SPECIFICATION
MIL-B-8906

P.A. NAVY - AS
Other Cust
USAF - 11
ARMY - AV