# Multiplier Circuits - Implementation Examples

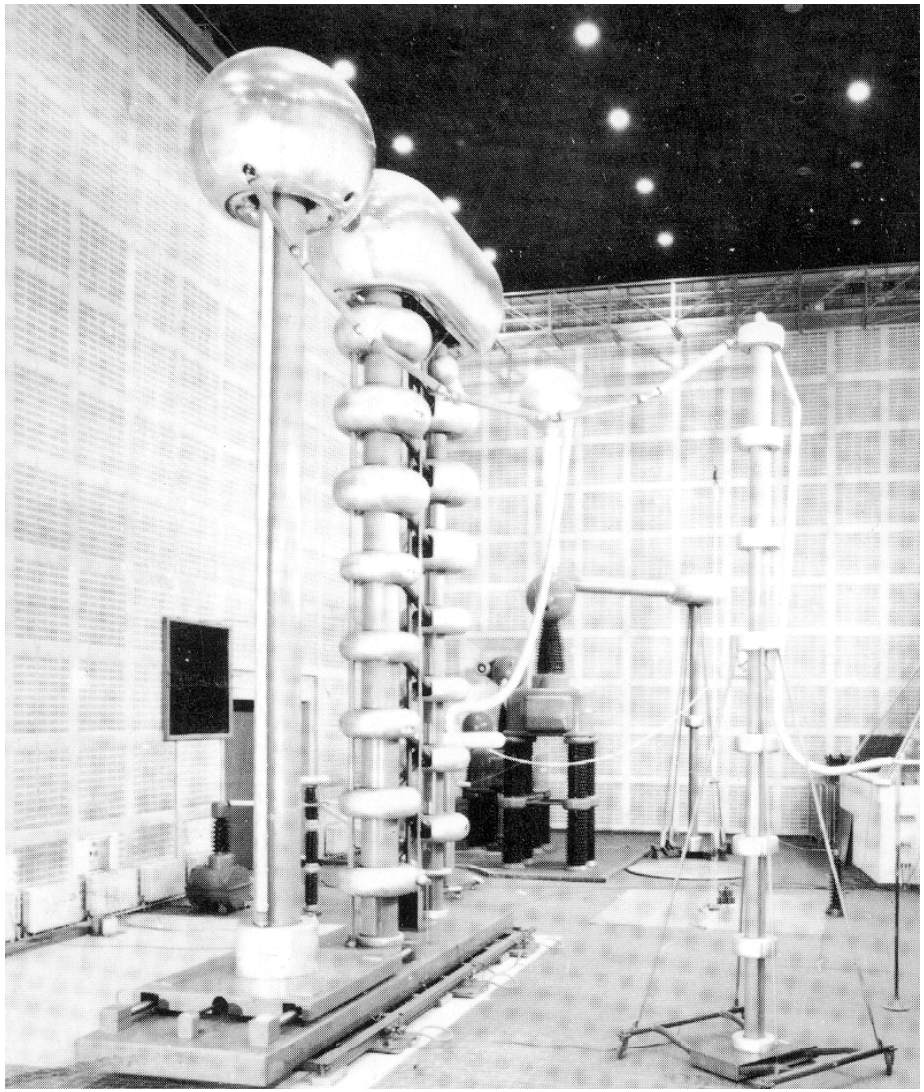

Greinacher-Cascade
2 MV (TU Berlin)

# Multiplier Circuits - Implementation Examples

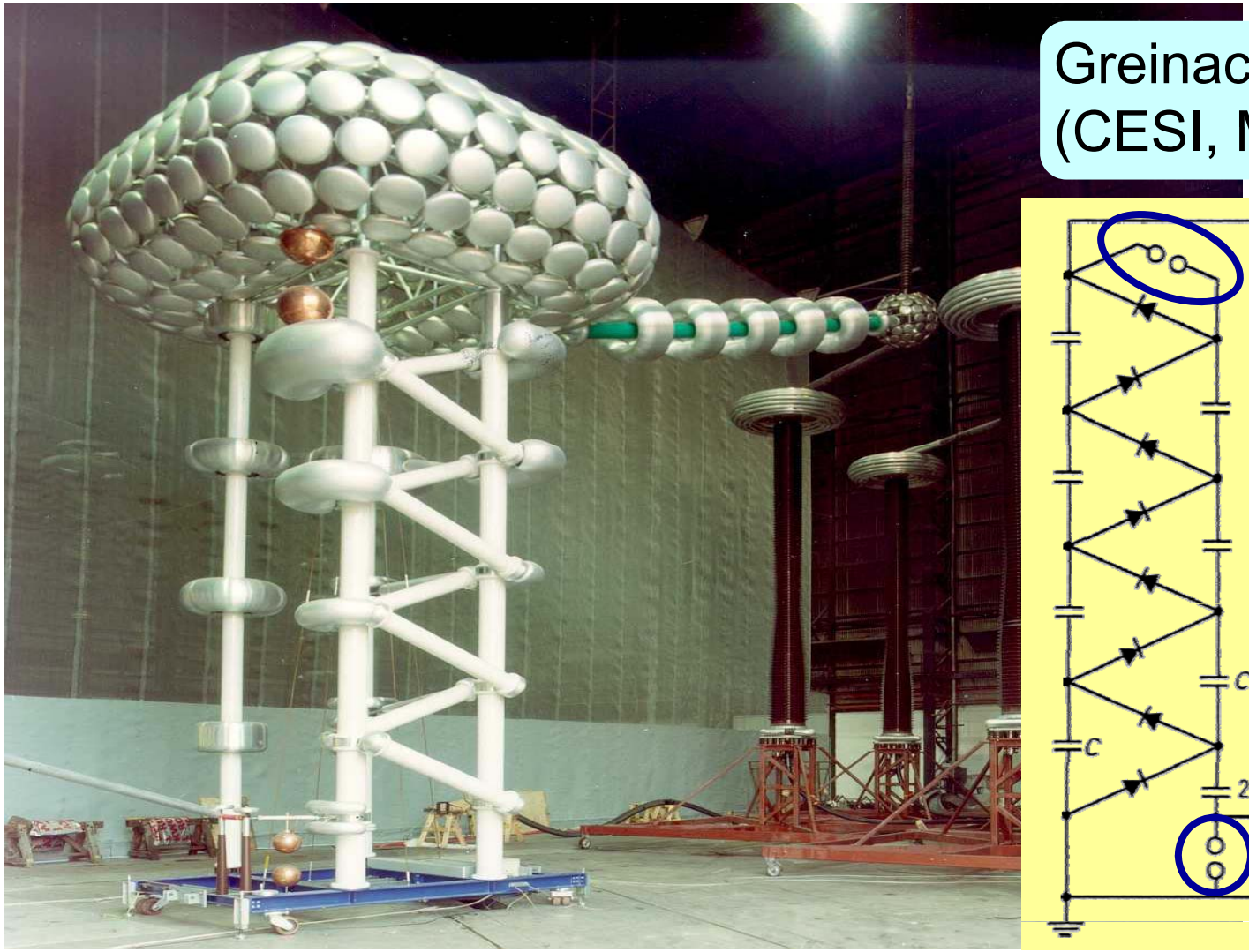

Greinacher-Cascade
(CESI, Milan/Italy)

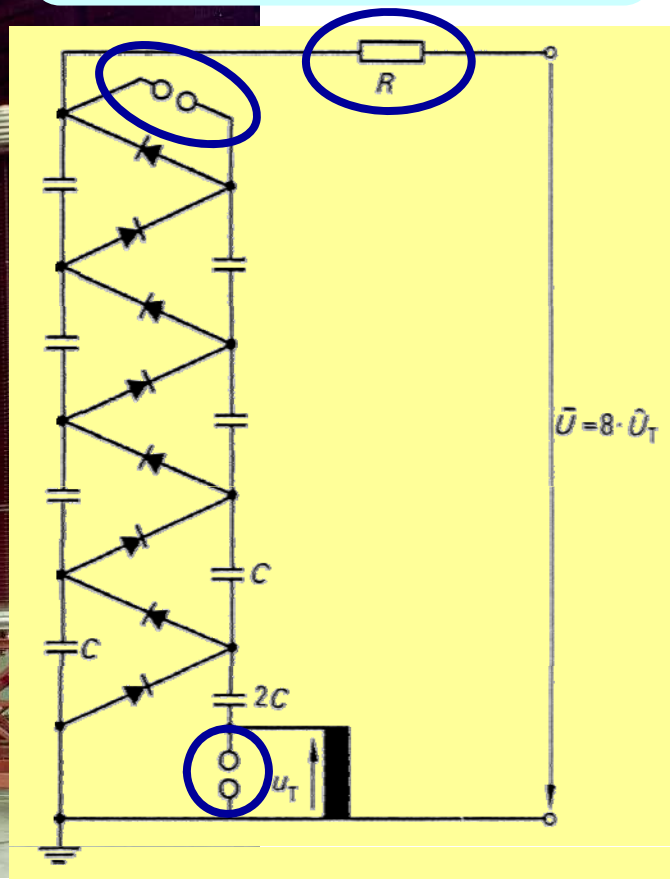

# Multiplier Circuits - Implementation Examples

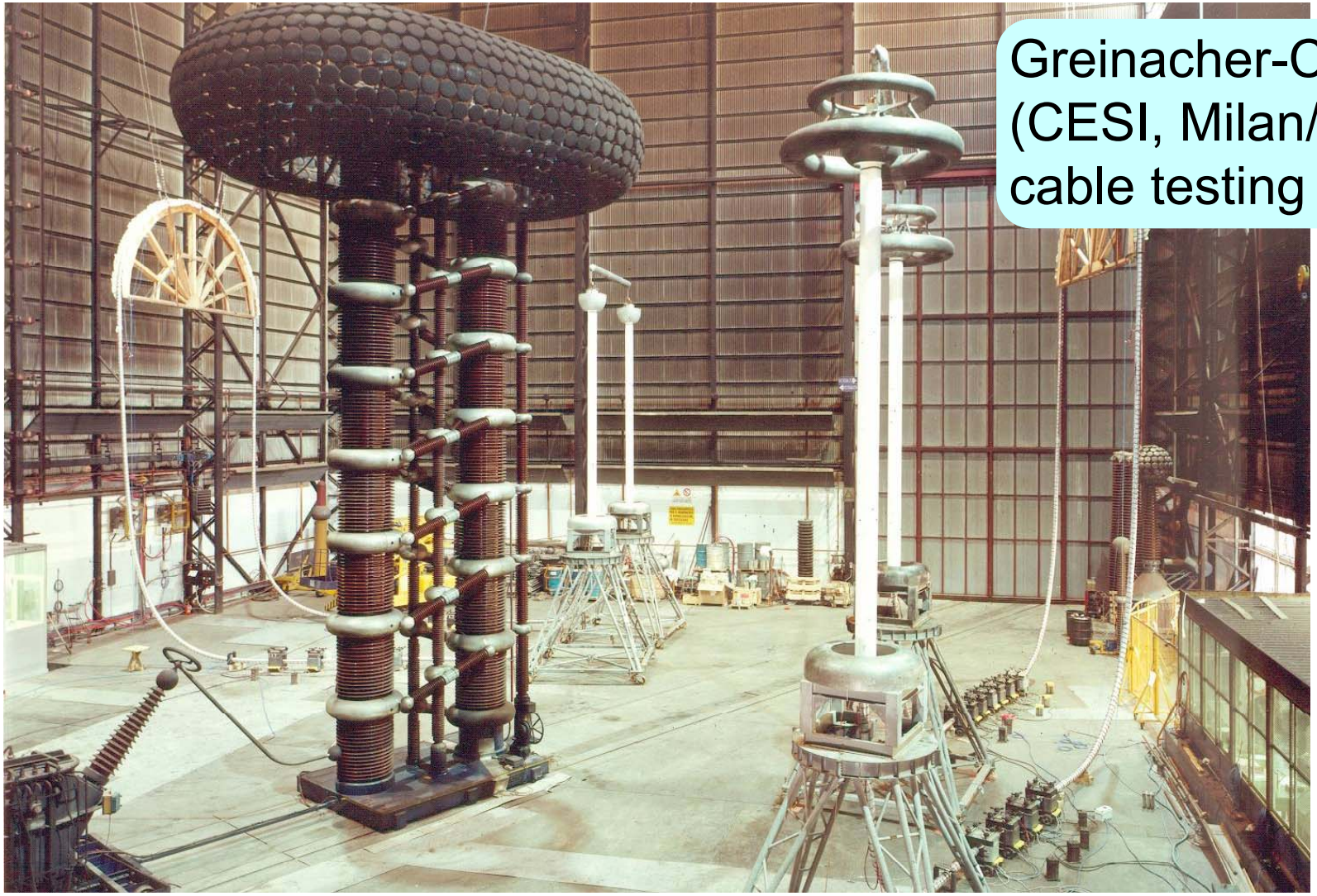

Greinacher-Cascade
(CESI, Milan/Italy)
cable testing

# Multiplier Circuits - Implementation Examples

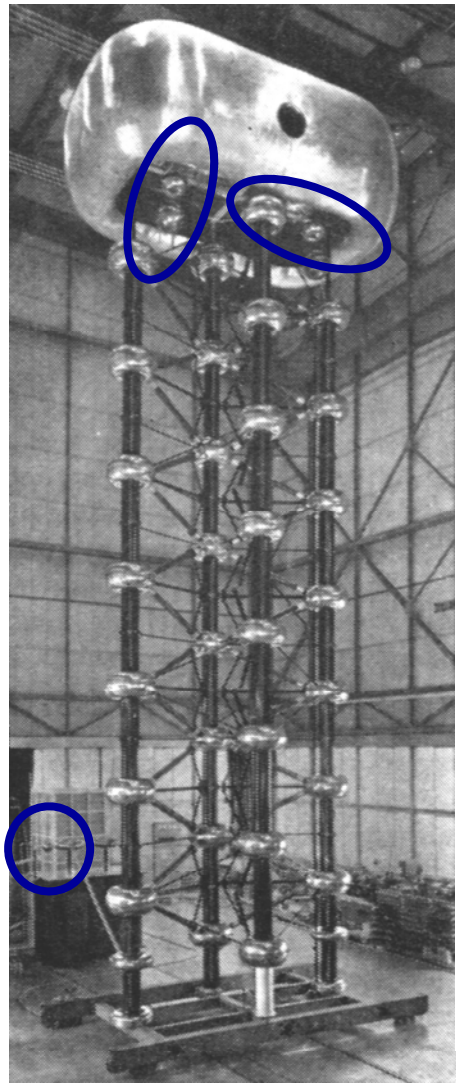

Two-phase (symmetrical)
seven stage
Greinacher-cascade 3.4 MV

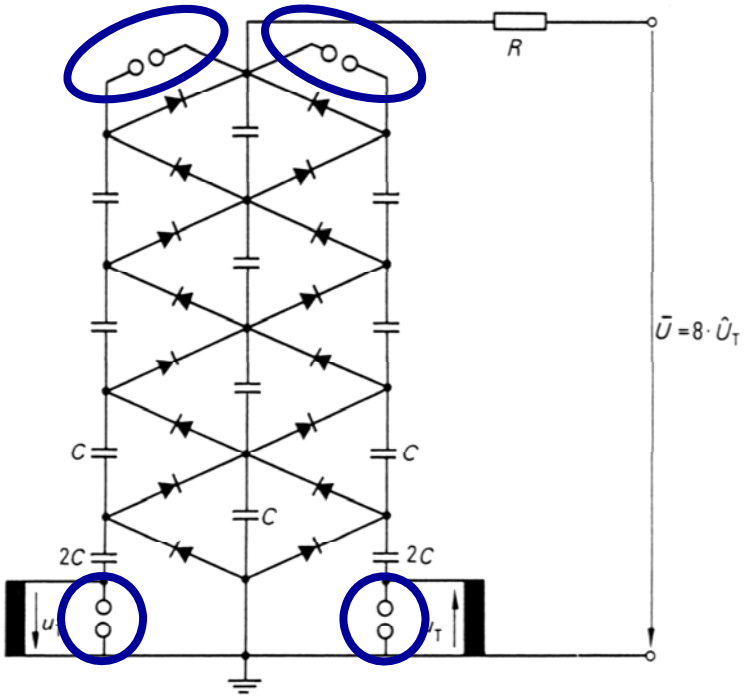


(Circuit diagram: two-phase (symmetrical) **four** stage Greinacher-cascade)

# Multiplier Circuits - Implementation Examples

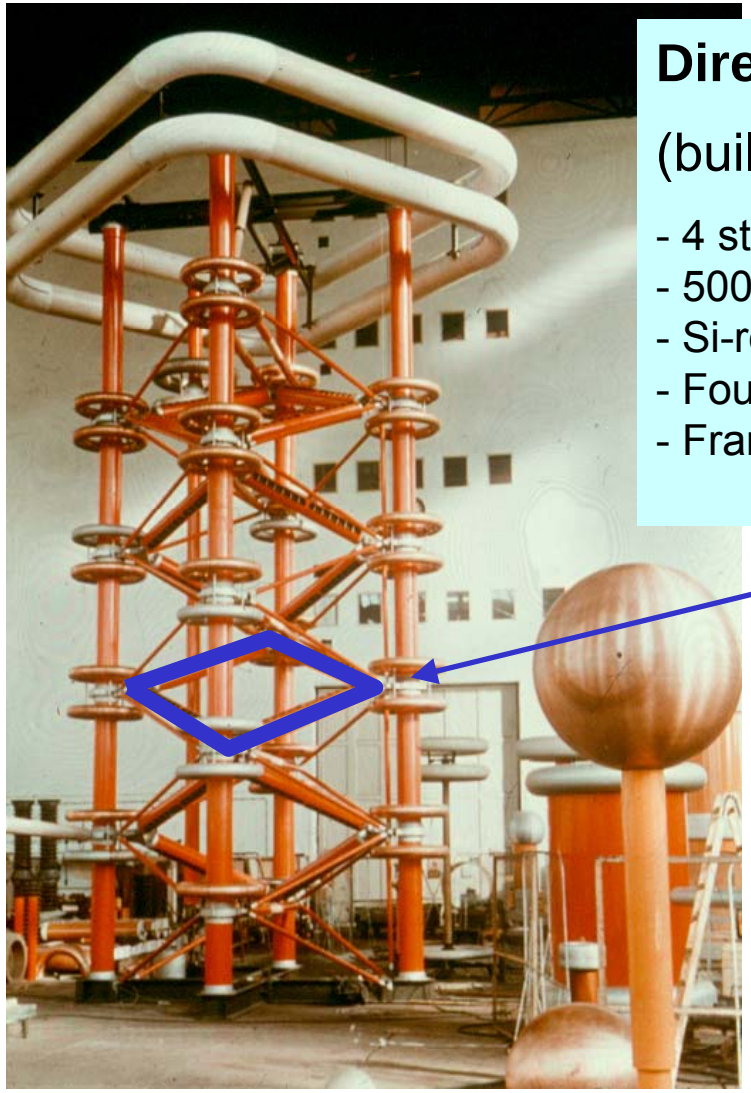

**Direct voltage generator 1600 kV/200 mA**

(built by TuR)

- 4 stages
- 500 Hz supply
- Si-rectifiers
- Four 450-kV rectifiers each combined in a rhombic frame
- Frames to be pivoted by motor drives for change of polarity

# Multiplier Circuits - Implementation Examples

**Direct voltage generator 2000 kV/10 mA**

(built by TuR for Toshiba/Japan)

- 7 stages
- Fed by two transformers on 2/7- and 6/7-potential
- Seismic resistant design
- Air cushion base for high mobility
- Change of polarity under load within 200 ms (up to 750 kV)

# Multiplier Circuits - Implementation Examples

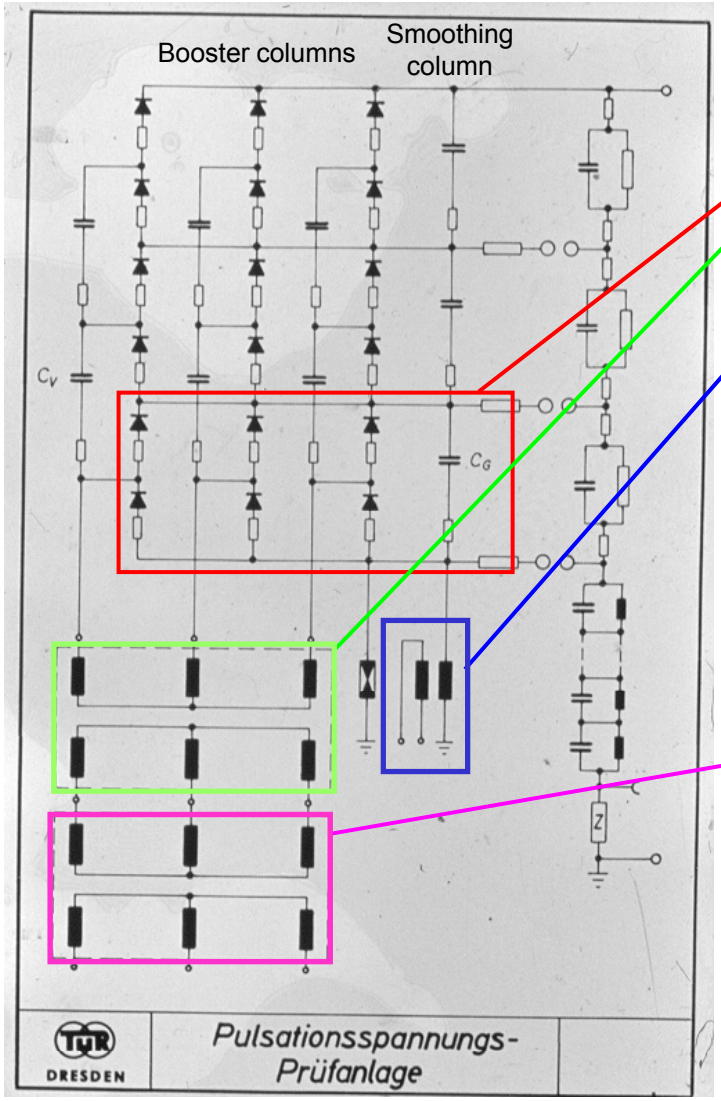


## Pulsating voltage test generator 1600 kV (circuit diagram)

Es ist das Schaltbild einer 3stufigen Gleichspannungsanlage in 3-Phasen-Zweiweg-Schaltung dargestellt. Der zugehörige Hochspannungstransformator speist die unterste Stufe der Vervielfachungsschaltung. Diese ist jedoch nicht direkt geerdet wie bei einer normalen Gleichspannungsanlage, sondern ist mit einem einpolig geerdeten Prüftransformator für 500 kV Wechselspannung in Serie geschaltet. Aus dieser Überlagerung von Wechsel- und Gleichspannung entsteht eine Mischspannung, mit der bestimmte Betriebsbeanspruchungen an Betriebsmitteln der HGÜ für Prüfzwecke nachgebildet werden können. Die Anhebung der gesamten Gleichspannungsvervielfachschaltung auf das 500-kV-Wechselspannungspotential bedingt aber auch eine für 500 kV Wechselspannung isolierte Aufstellung des 3phasigen Gleichrichter-Transformators und seine Einspeisung über einen entsprechenden Isoliertransformator.

**3 stage direct voltage generator,**
**3-phase double way rectifier type**

3-phase double-way bridge

Feeding transformer

500-kV transformer; series connected to the direct voltage generator

Insulating transformer

# Multiplier Circuits - Implementation Examples

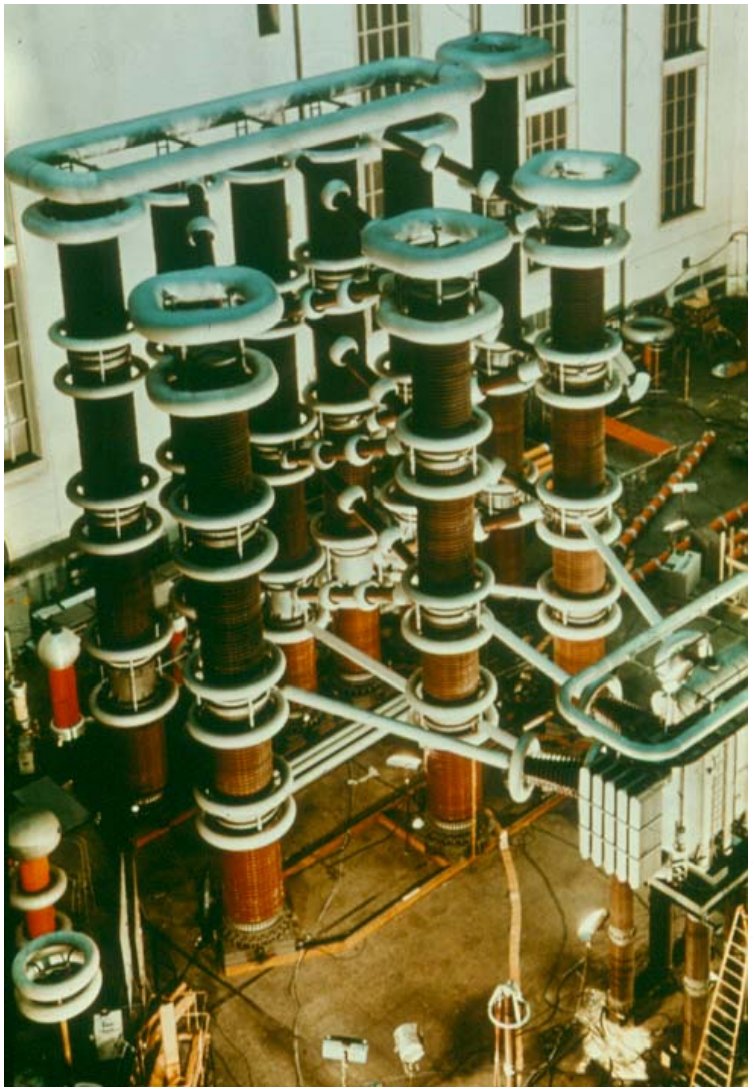

Pulsating voltage test generator 1600 kV; erection in the test lab for commissioning test

Dia 13: Pulsationsspannungsprüfanlage 1600 kV

Gezeigt wird die vorgenannte Anlage in prüffeldmäßiger Aufstellung für die Erprobung in der TuR-Hochspannungshalle. Die Anlage ist für Langzeit-Dauerbetrieb in Freiluft unter realen Witterungsbedingungen ausgelegt.
Belastbarkeit 1 A im Dauerbetrieb.

# Multiplier Circuits - Implementation Examples

Greinacher-Cascade 16 kV
(built from electronic components)

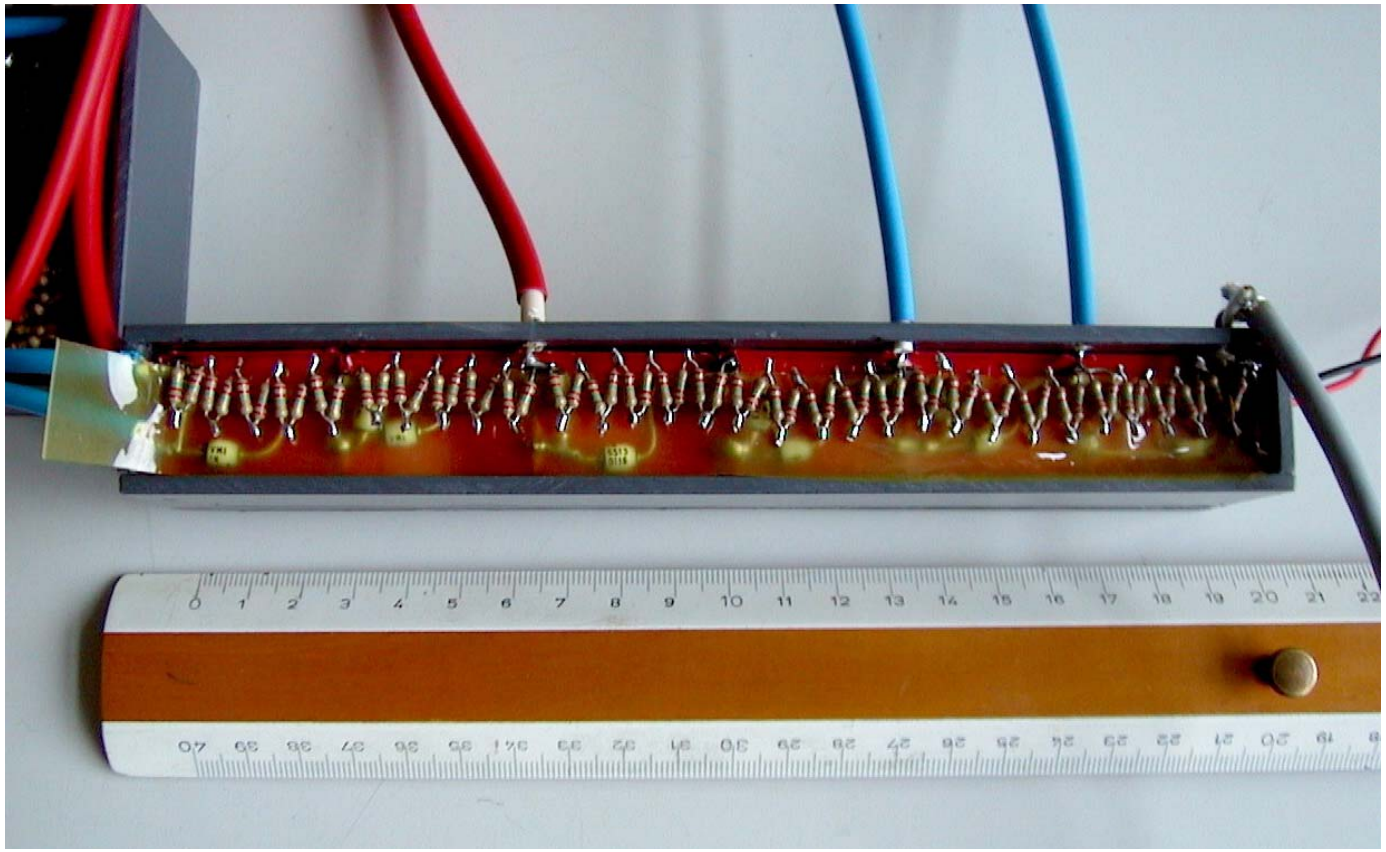

# Van de Graaff Generator

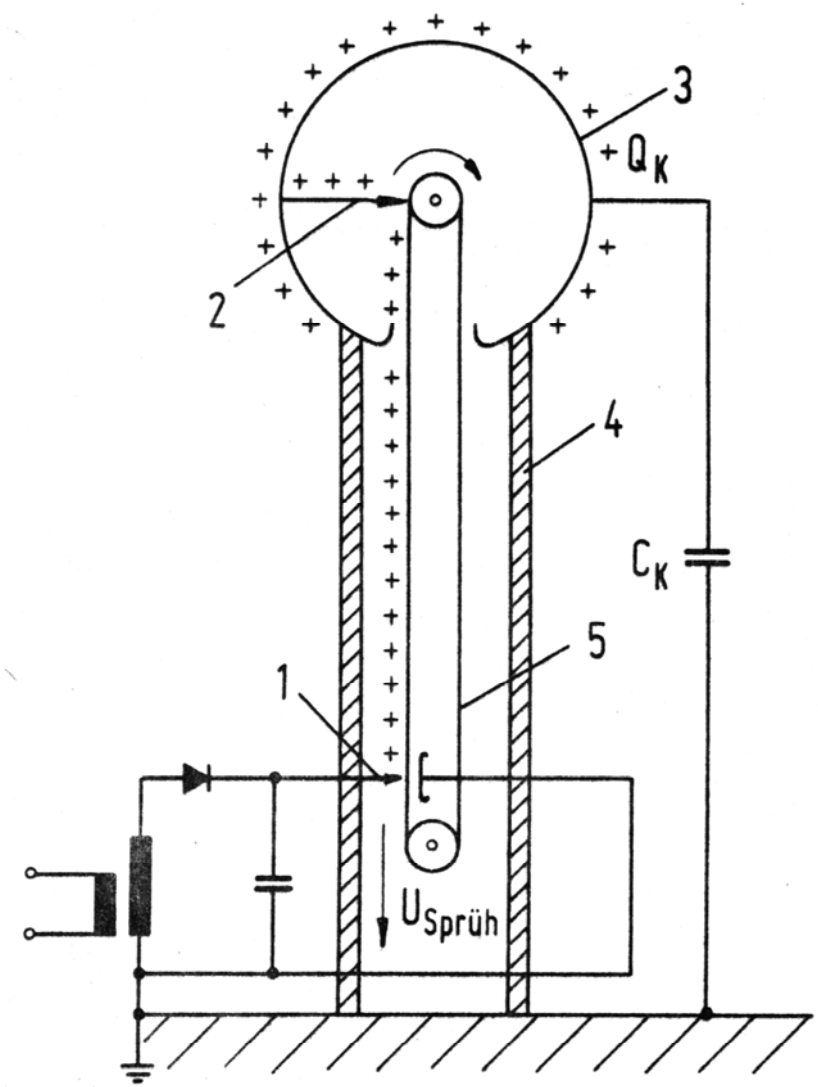


Transport of charge carriers against the force of an electric field

1 ... Spray electrode
2 ... Reception electrode
3 ... Metallic hollow sphere
4 ... Insulating tube
5 ... Insulating belt

$Q_k$ ... Accumulated charge on the surface of the sphere
$C_k$ ... (Stray-)capacitance sphere to ground

$$U_K = \frac{Q_K}{C_K}$$

# Van de Graaff Generator

$$E_{\max} = \frac{U_K}{r_K}$$

Maximum voltage limited only by pre-discharges at the high-voltage terminal

$$U_K = r_K \cdot E_{\max}$$

Maximum possible electric field stress in air without pre-discharges:

$E_{\max}$ = 25 kV/cm

Assumption: sphere radius $r_K$ = 2 m

$\Rightarrow U_K$ = 200 cm · 25 kV/cm = 5 MV

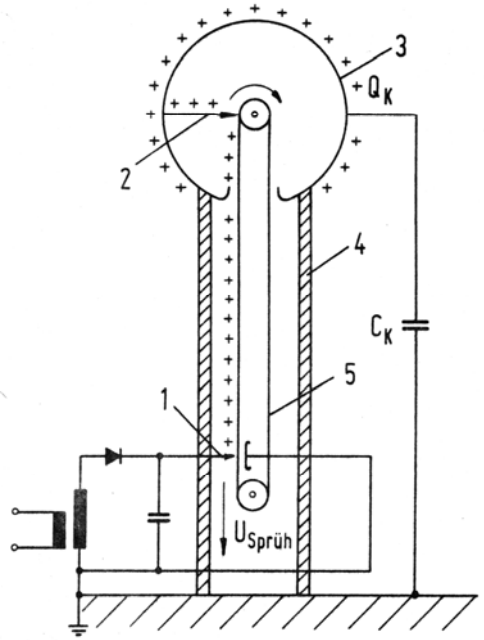

# Van de Graaff Generator

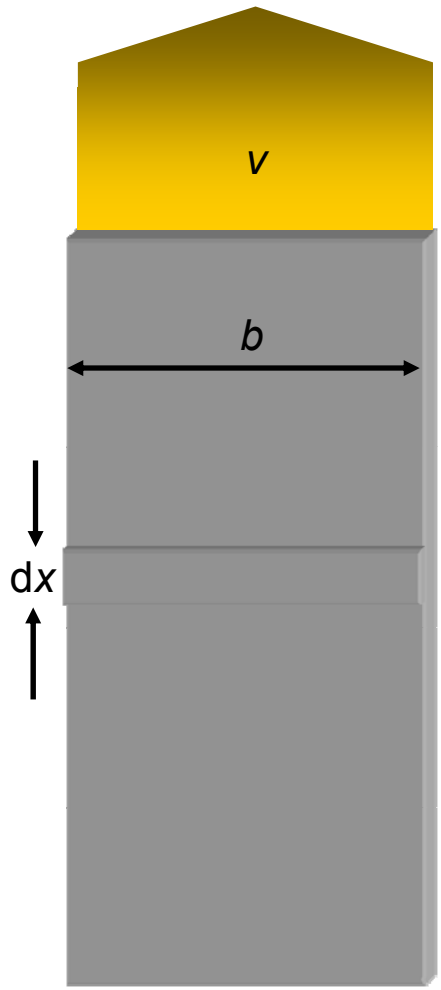


Maximum current given by
- applicable surface charge density $\sigma$
- width $b$ of the belt
- velocity $v$ of the belt

Electrical charge of a section d$x$ of the belt:

$$\mathrm{d}q = \sigma \cdot b \, \mathrm{d}x \qquad \Rightarrow \qquad \frac{\mathrm{d}q}{\mathrm{d}x} = \sigma \cdot b$$

Velocity of the belt: $$v = \frac{\mathrm{d}x}{\mathrm{d}t}$$

Possible load current:

$$I = \frac{\mathrm{d}q}{\mathrm{d}t} = \frac{\mathrm{d}q}{\mathrm{d}x} \cdot \frac{\mathrm{d}x}{\mathrm{d}t} = \sigma \cdot b \cdot v$$

# Van de Graaff Generator

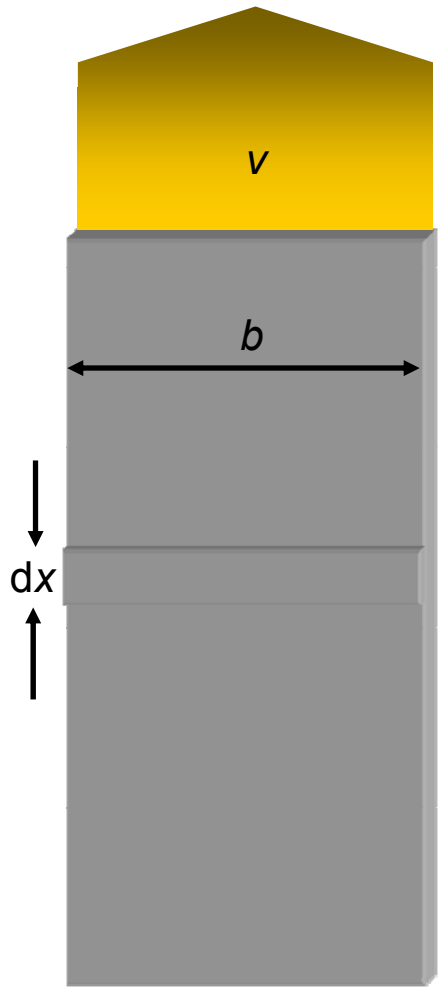


## Example calculation

Maximum applicable surface charge density (limited by ionization field strength of the surrounding air):

$$\sigma_{\text{max, air}} \approx 2 \cdot 10^{-5} \frac{\text{As}}{\text{m}^2}$$

= 72 km/h

Assumptions: $v$ = 20 m/s; $b$ = 0,5 m

$$I_{\text{max, air}} = \sigma_{\text{max, air}} \cdot b \cdot v = 2 \cdot 10^{-5} \cdot 0{,}5 \cdot 20 \text{ A} = 0{,}2 \text{ mA}$$

# Van de Graaff Generator

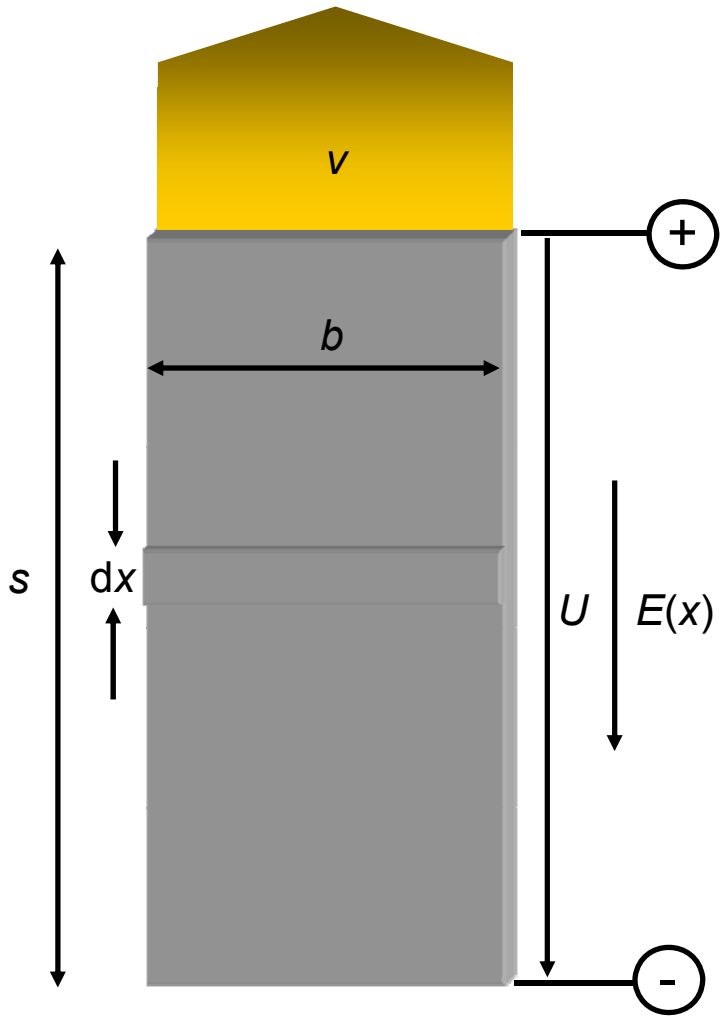


## Required mechanical power

Electrical charge of section d$x$ of the belt:
$\mathrm{d}q = \sigma \cdot b\,\mathrm{d}x$

Force affecting the belt in total:

$$F = \int_0^s \mathrm{d}F = \int_0^s E(x)\mathrm{d}q = \underbrace{\sigma \cdot b}_{= I/v} \cdot \underbrace{\int_0^s E(x)\mathrm{d}x}_{= U}$$

$$P_{\mathrm{mech}} = F \cdot v = U \cdot I = P_{\mathrm{el}}$$

Example: 5 MV·0,2 mA = 1 kW

# Van de Graaff Generator

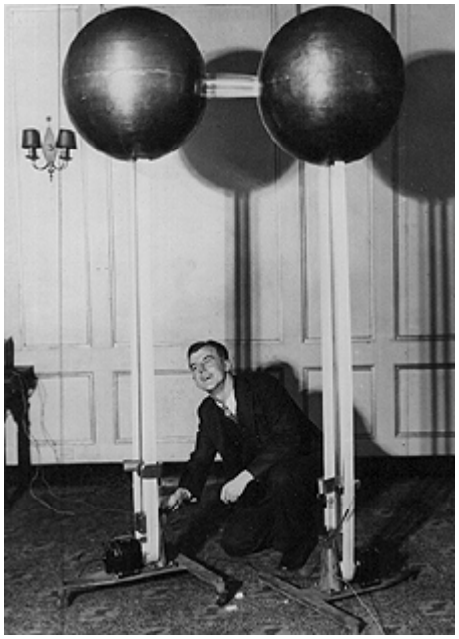

Van de Graaff
with prototype 1 MV
(ca. 1930)

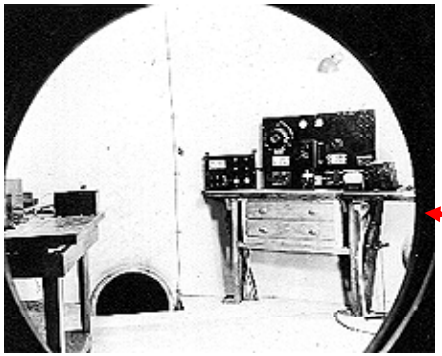

Laboratories in the spheres

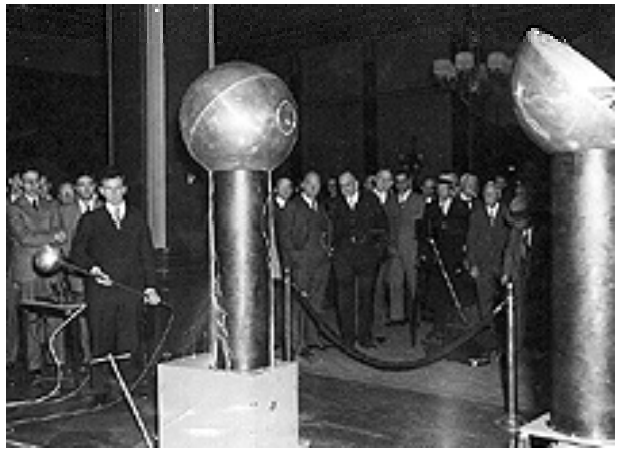

Presentation of
prototype 1 MV
(ca. 1930)

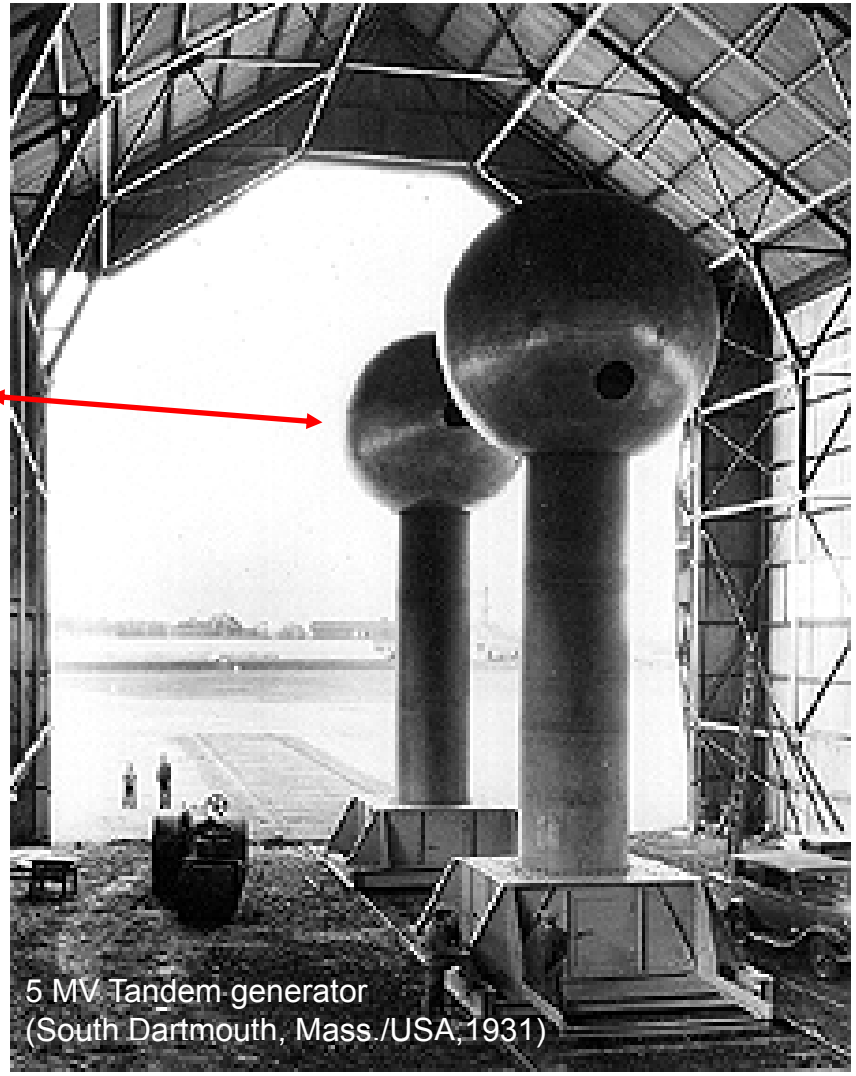

5 MV Tandem generator
(South Dartmouth, Mass./USA,1931)

# Van de Graaff Generator

Limits ....

# Van de Graaff Generator

World's largest air insulated Van de Graaff generator 25 MV
Oak Ridge National Laboratory, USA

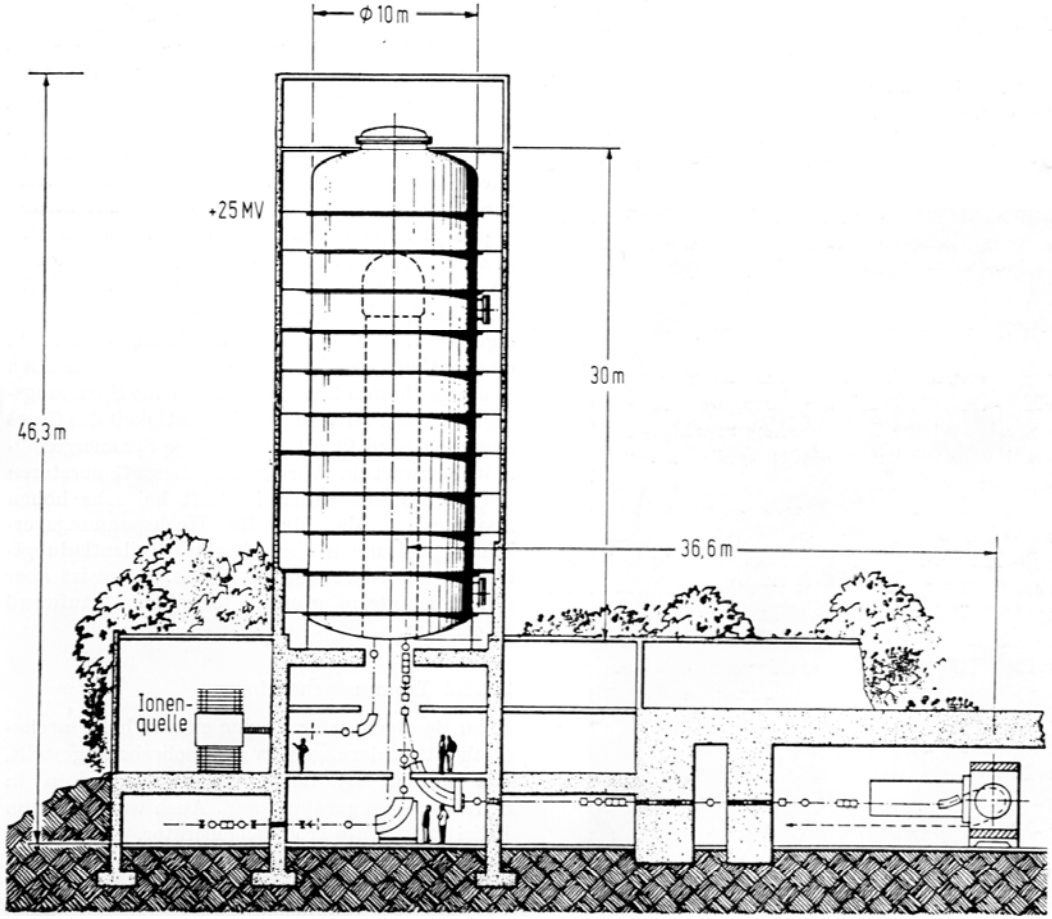

# Van de Graaff Generator

World's largest air insulated Van de Graaff generator 25 MV
Oak Ridge National Laboratory, USA

# Van de Graaff Generator

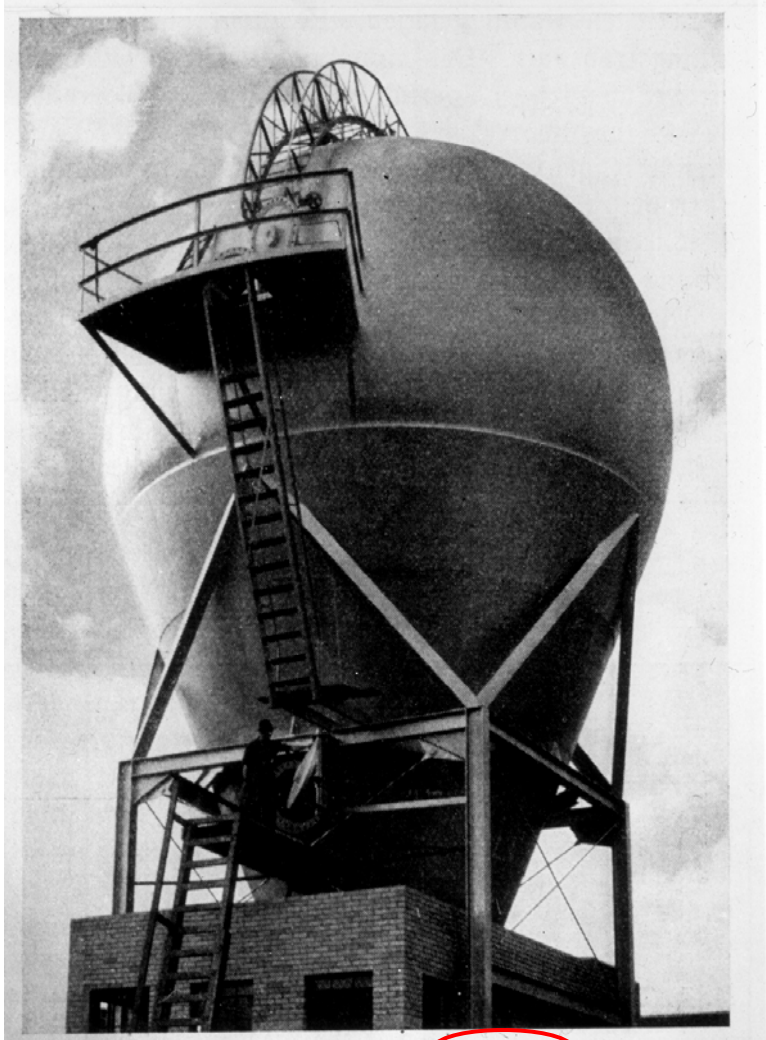

Bild 3. Van de Graaff-Generator in Druckgefäß Bauart Westinghouse El. & Mfg. Co, Pittsburgh, für 5000 kV gegen Erde entworfen.

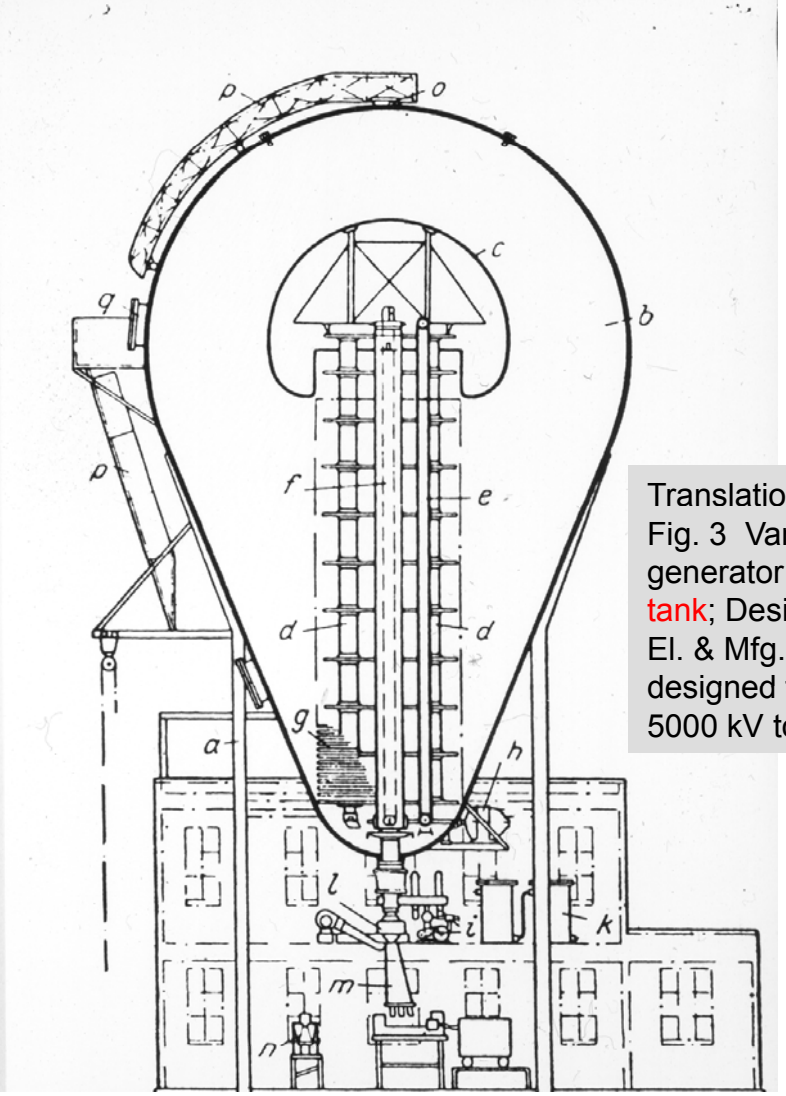


Translation:
Fig. 3 Van de Graaff generator in pressurized tank; Design Westinghouse El. & Mfg. Co., Pittsburgh; designed for 5000 kV to ground

# Van de Graaff Generator

## Pelletron

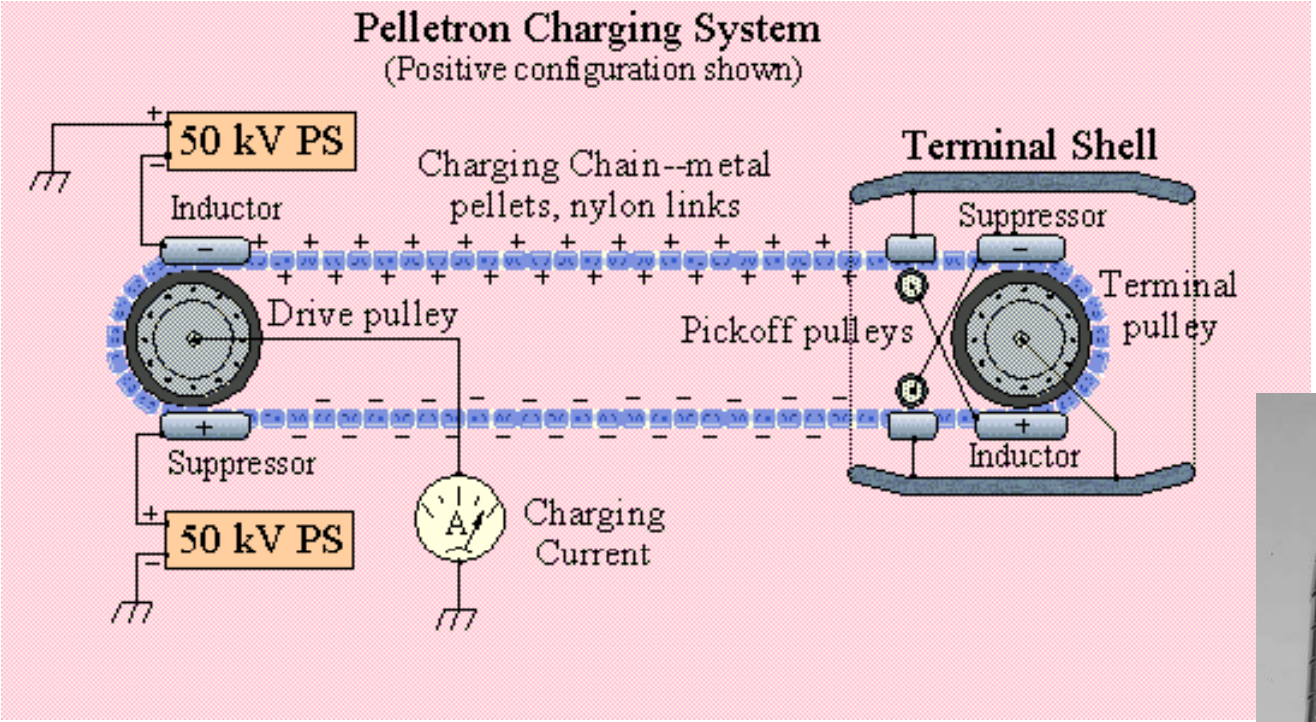


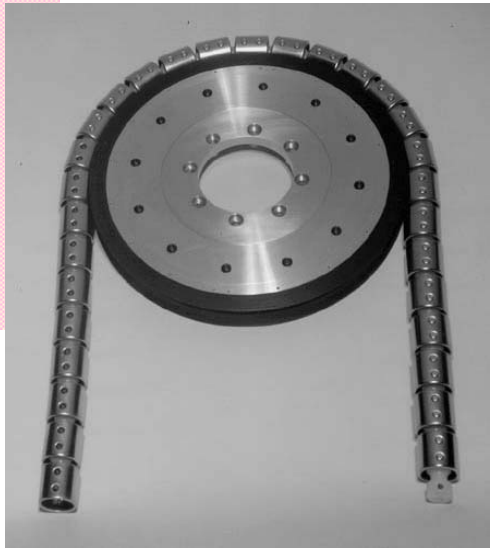

# Van de Graaff Generator

Working principle of a tandem accelerator with Van de Graaff Generator

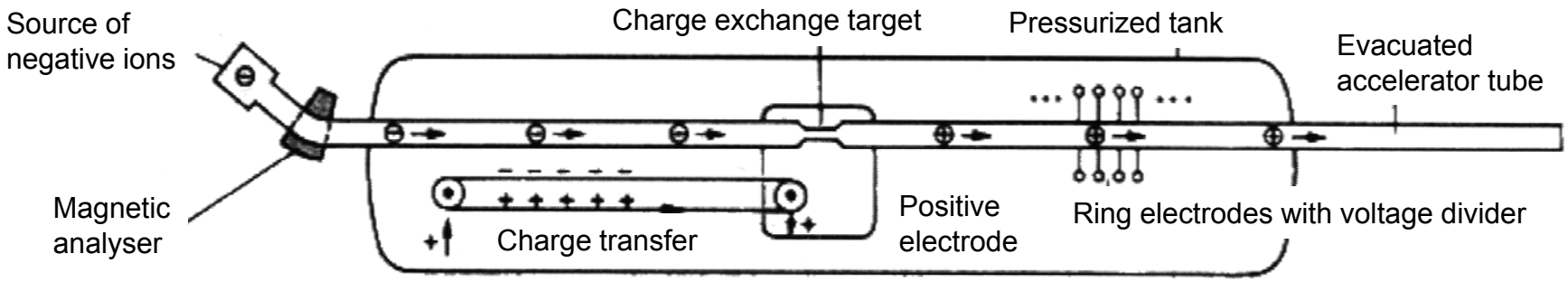

# Van de Graaff Generator

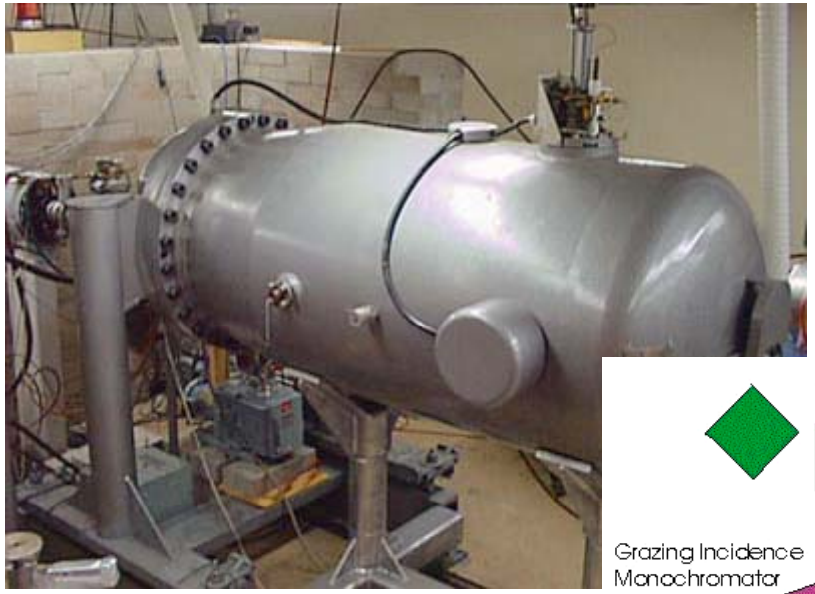

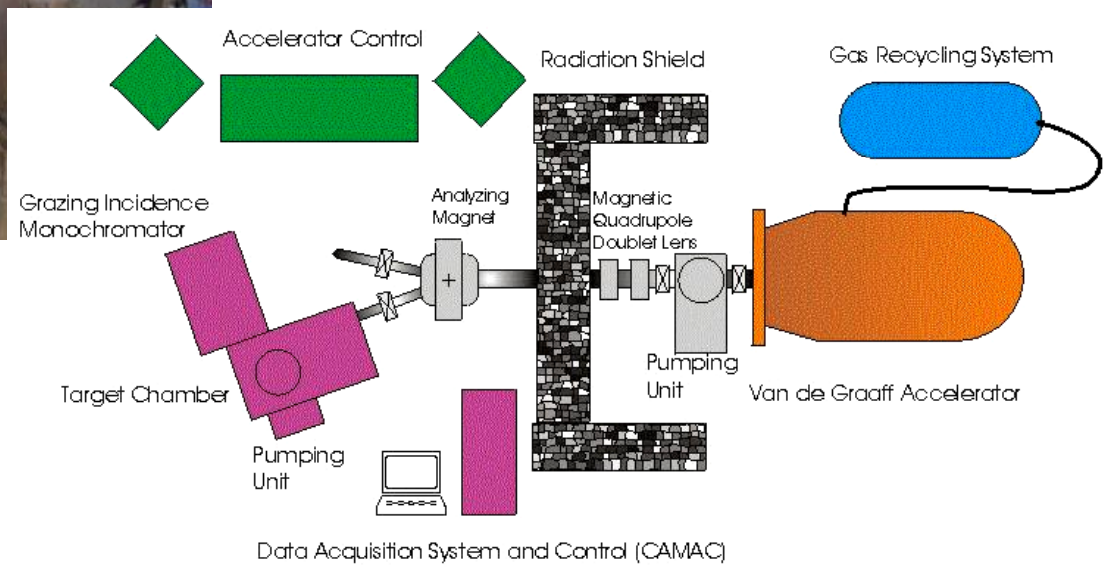


The University of Nevada Reno, Van de Graaff accelerator, target chamber and EUV monochrometer

# Van de Graaff Generator

Brookhaven National Laboratory
2 Van de Graaff generators 15 MV each, 24 m long
Year of manufacturing 1970

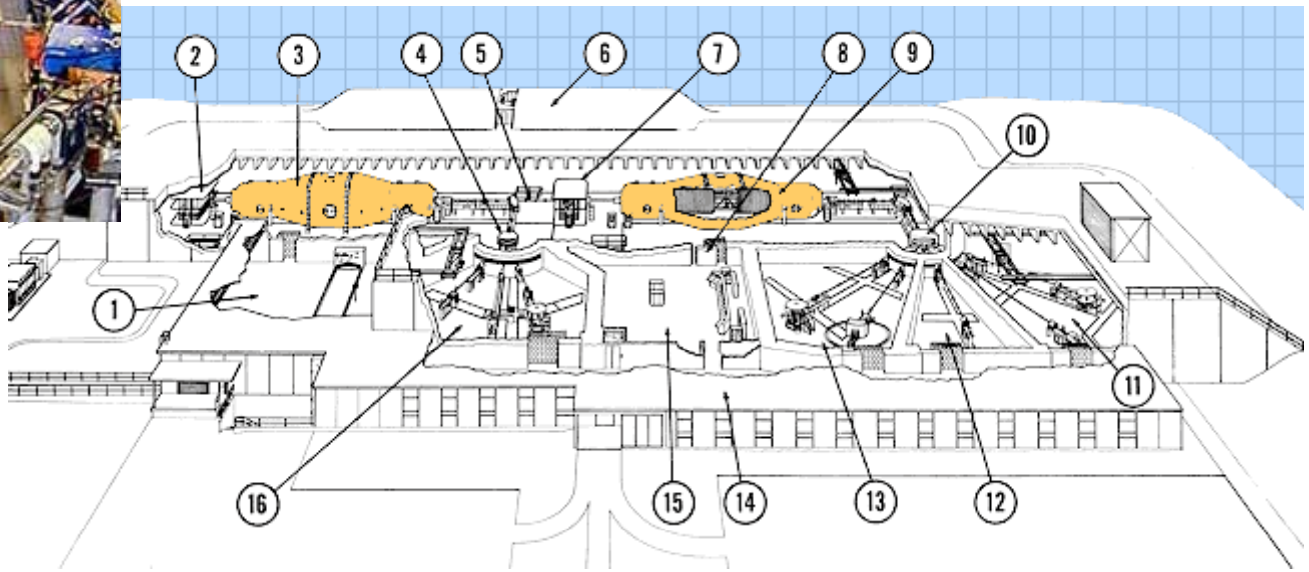

# HVDC Converters

## 6-pulse-bridge

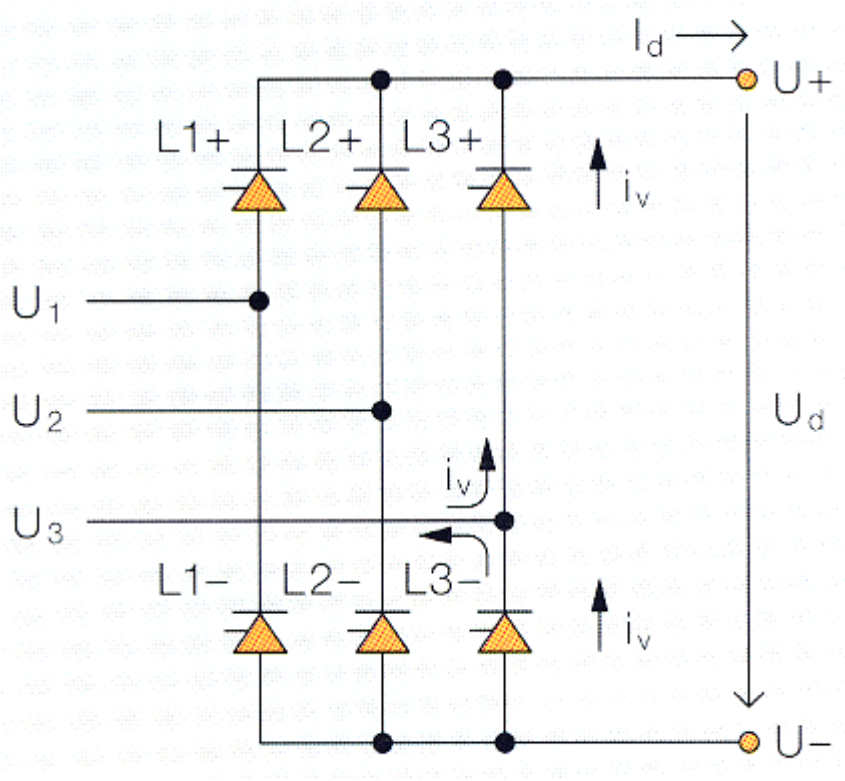


Waveshape of the direct voltage at different firing angles:

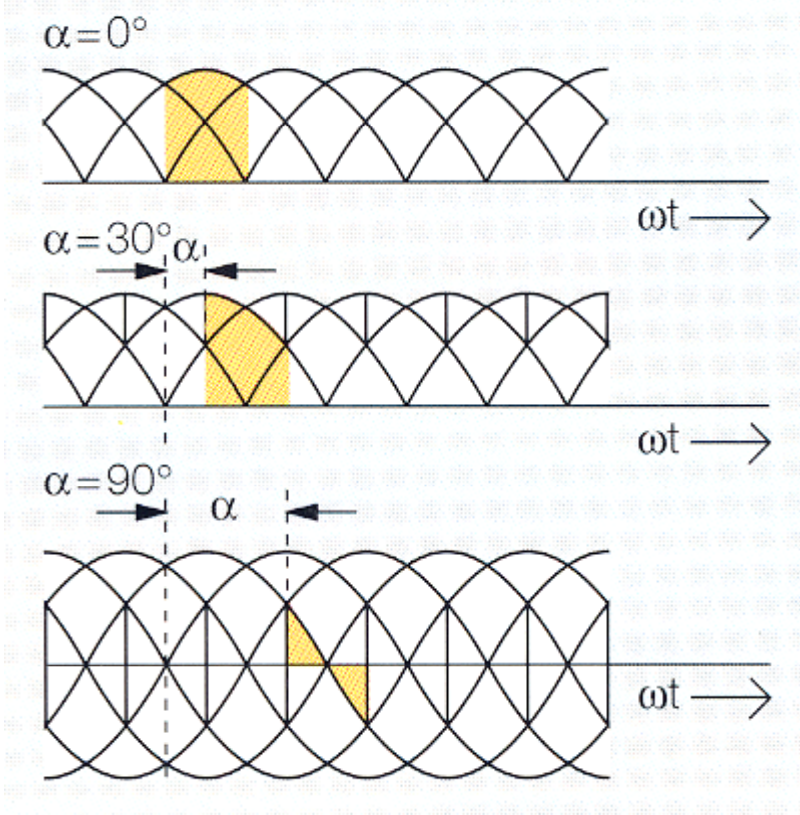

# HVDC Converters

## 12-pulse-bridge

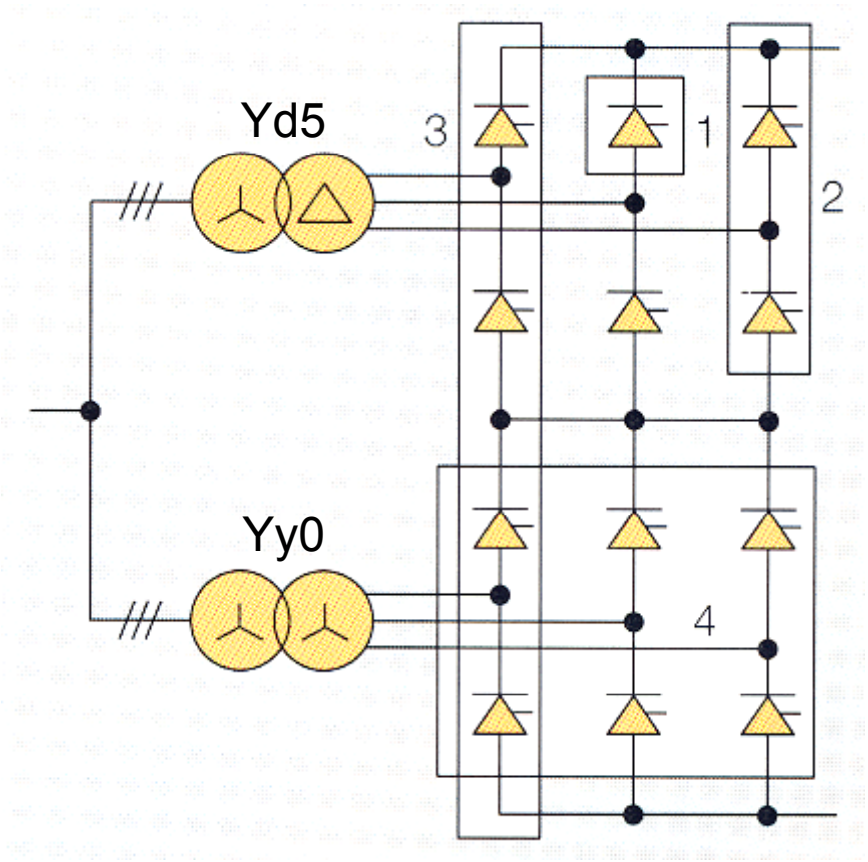


Arrangement of valve arms (valve legs) to form a 12-pulse-bridge

1. Valve arm (valve leg, valve)
2. Double acting valve
3. Valve tower (quadrivalve)
4. 6-pulse-bridge

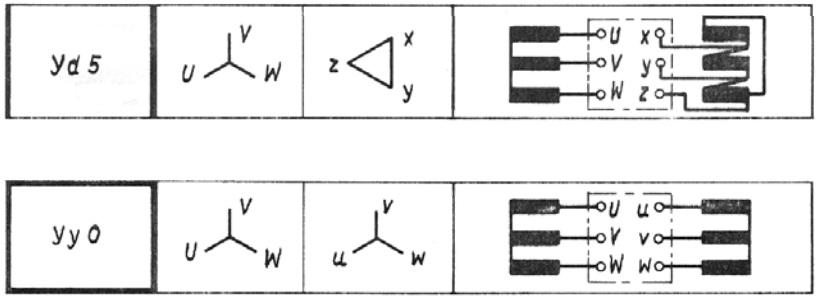

# HVDC Converters

12-pulse-bridge

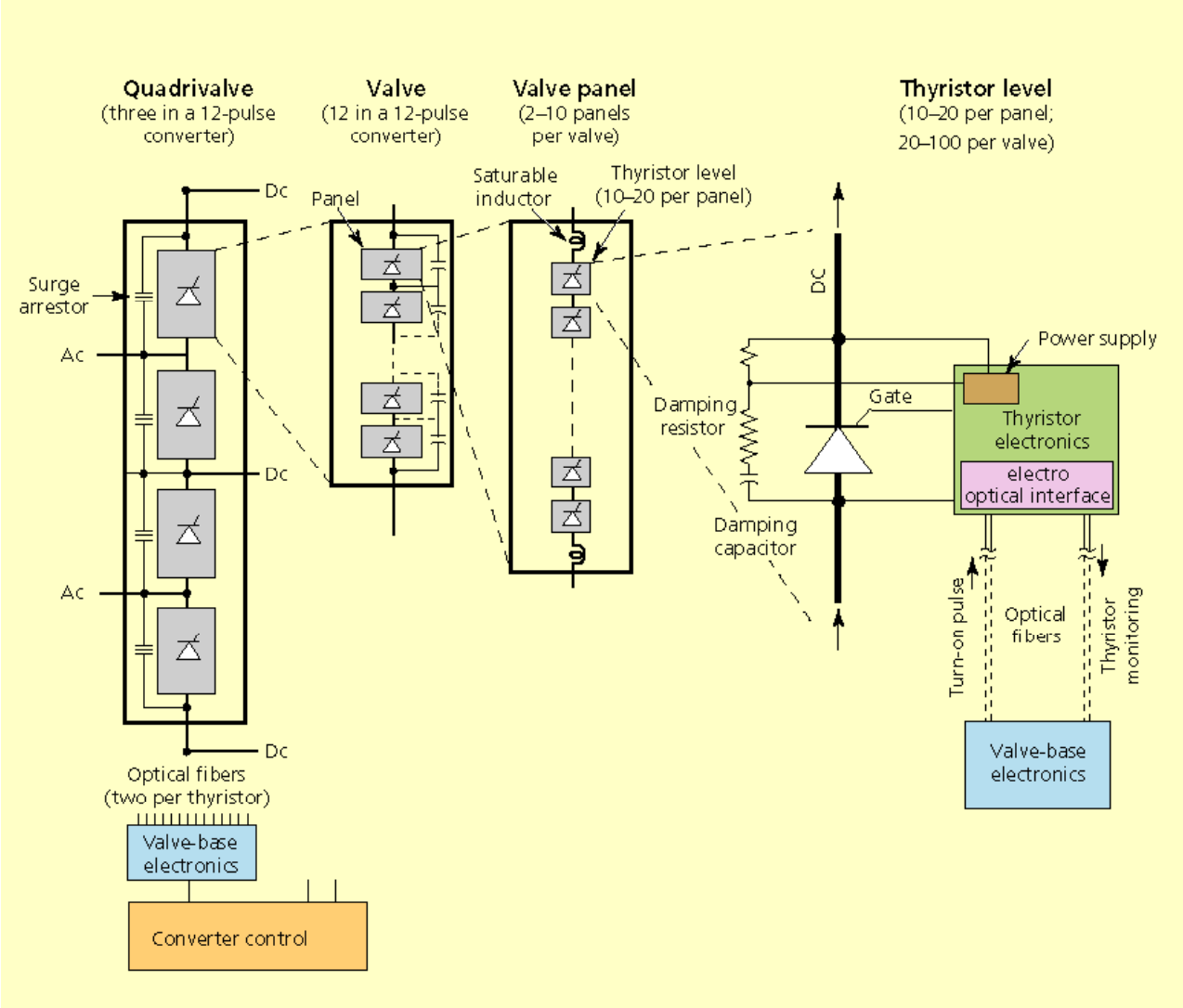

# HVDC Converters

Thyristors

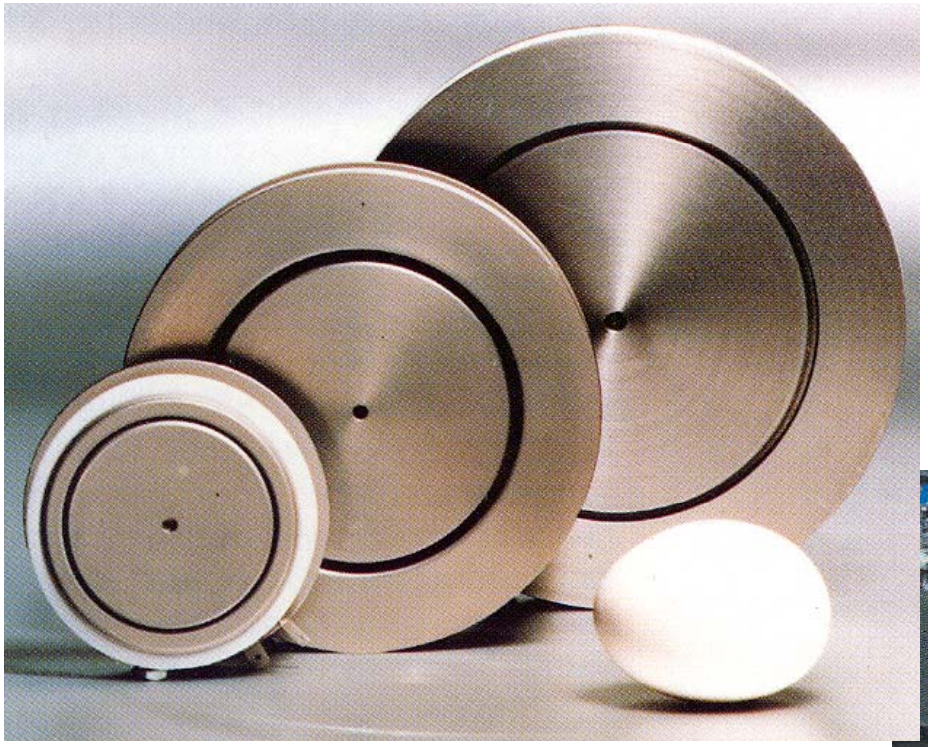

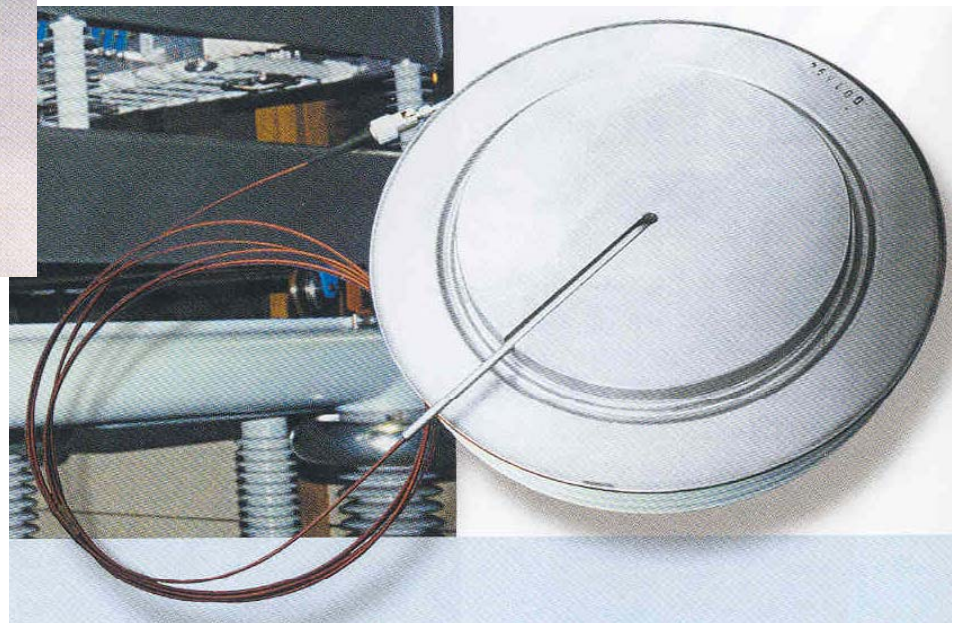

# HVDC Converters

Valve panel

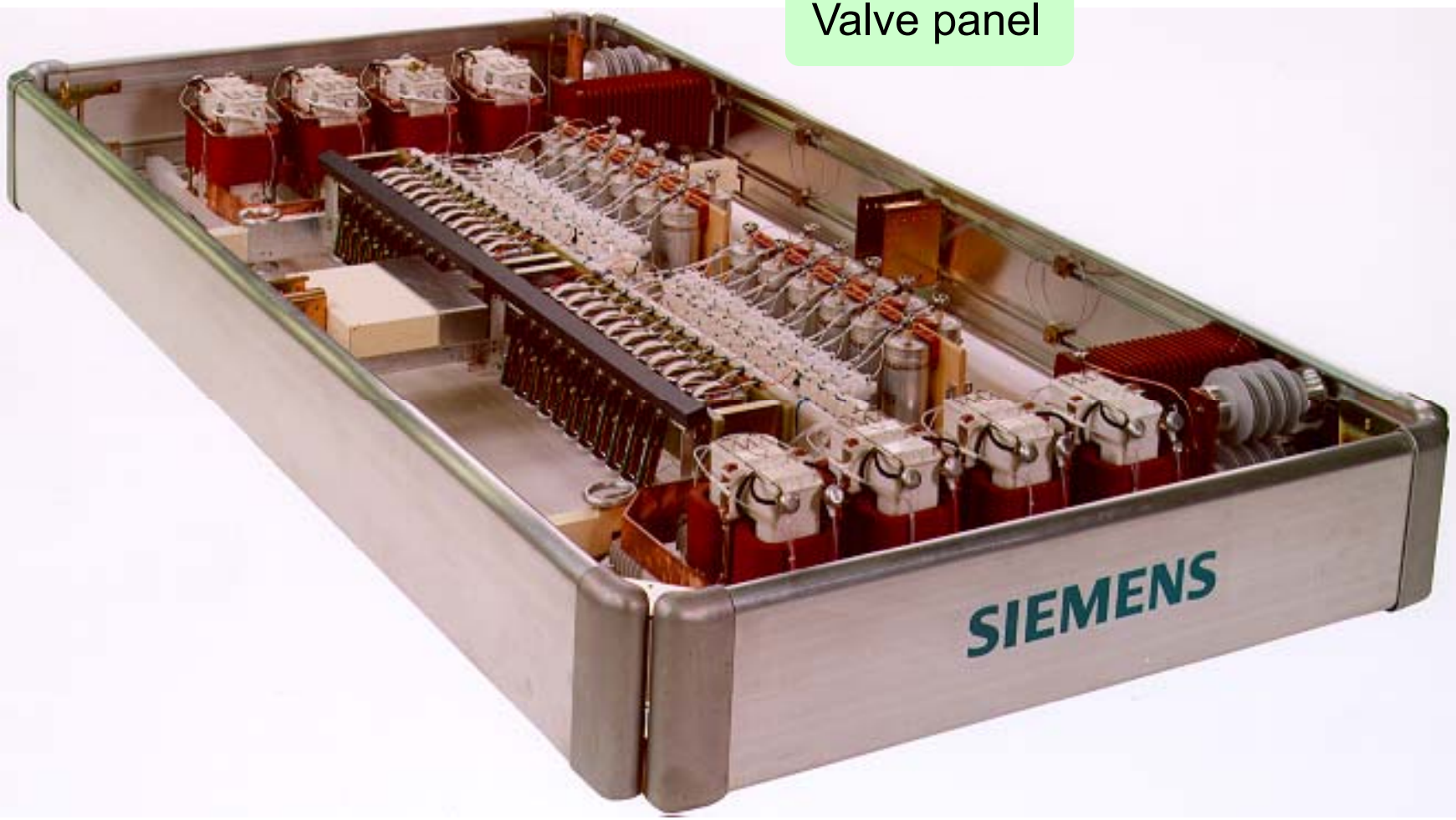

# HVDC Converters

## 12-pulse-bridge

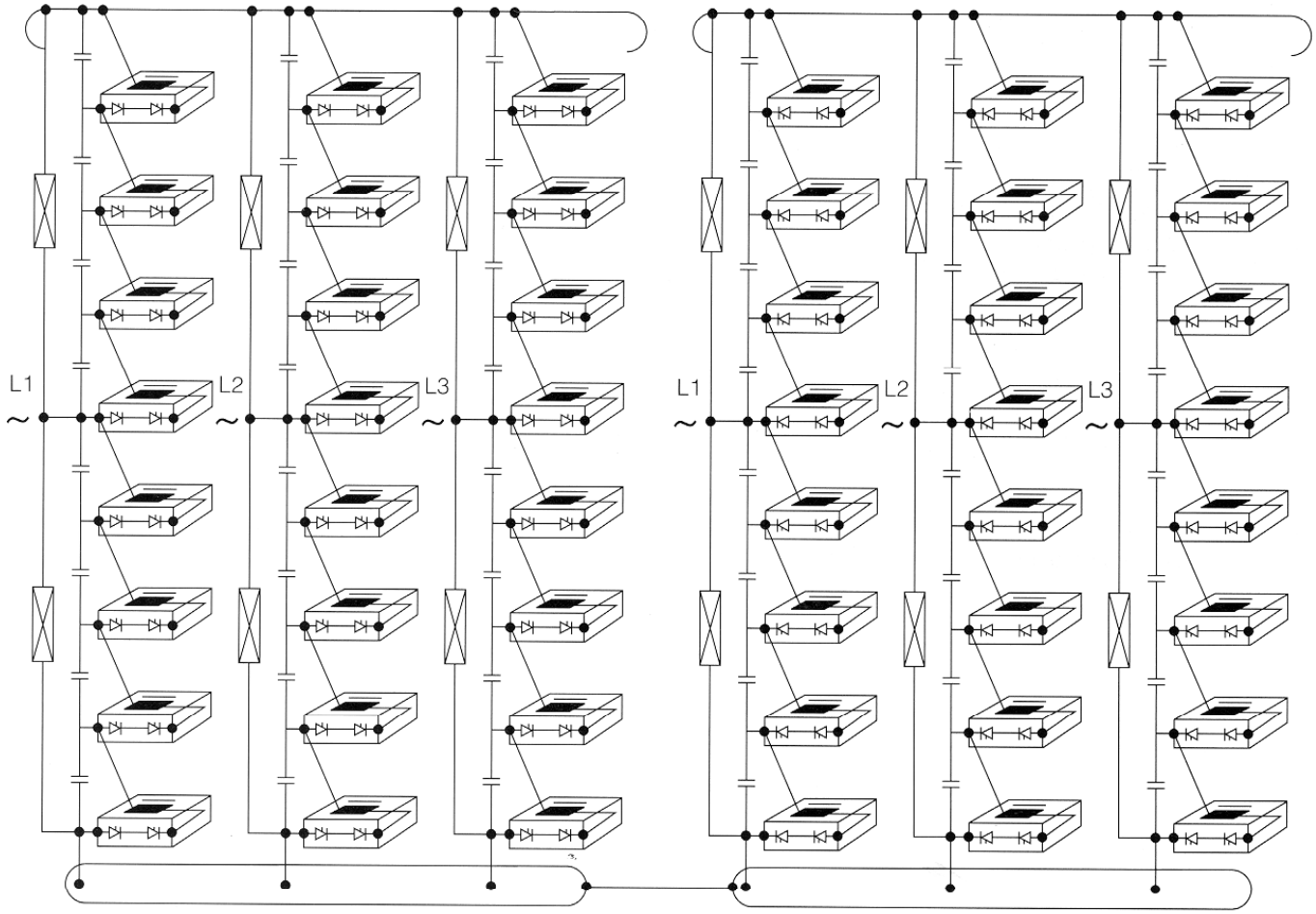


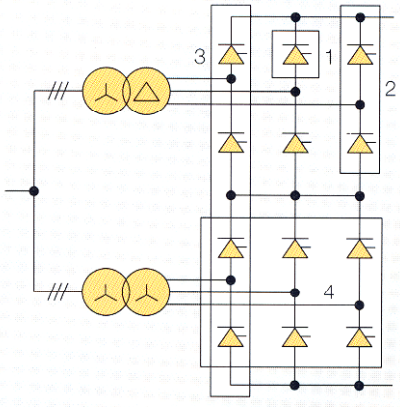

# HVDC Converters

12-pulse-bridge

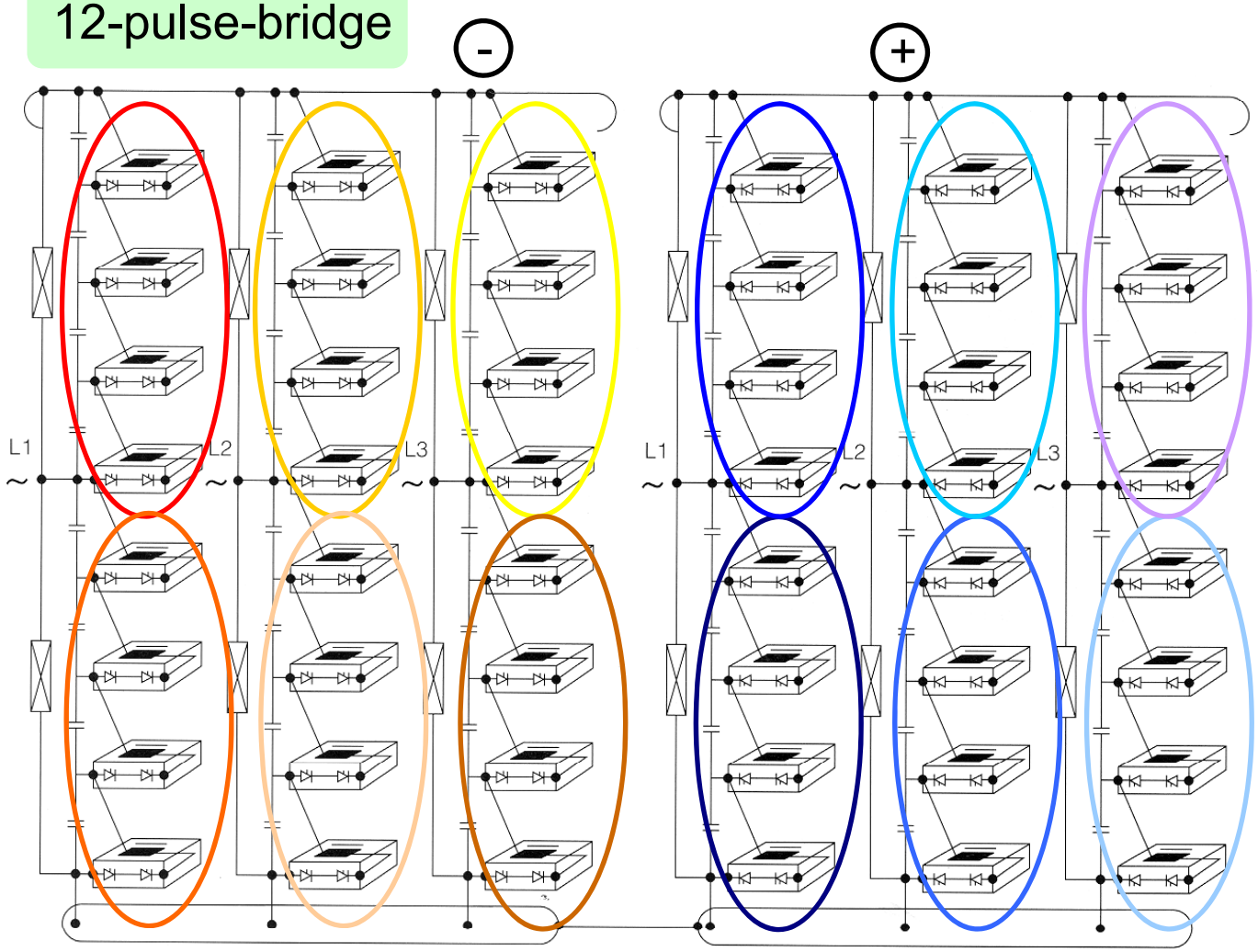


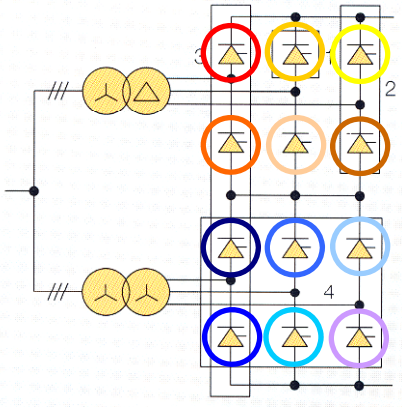

# HVDC Converters

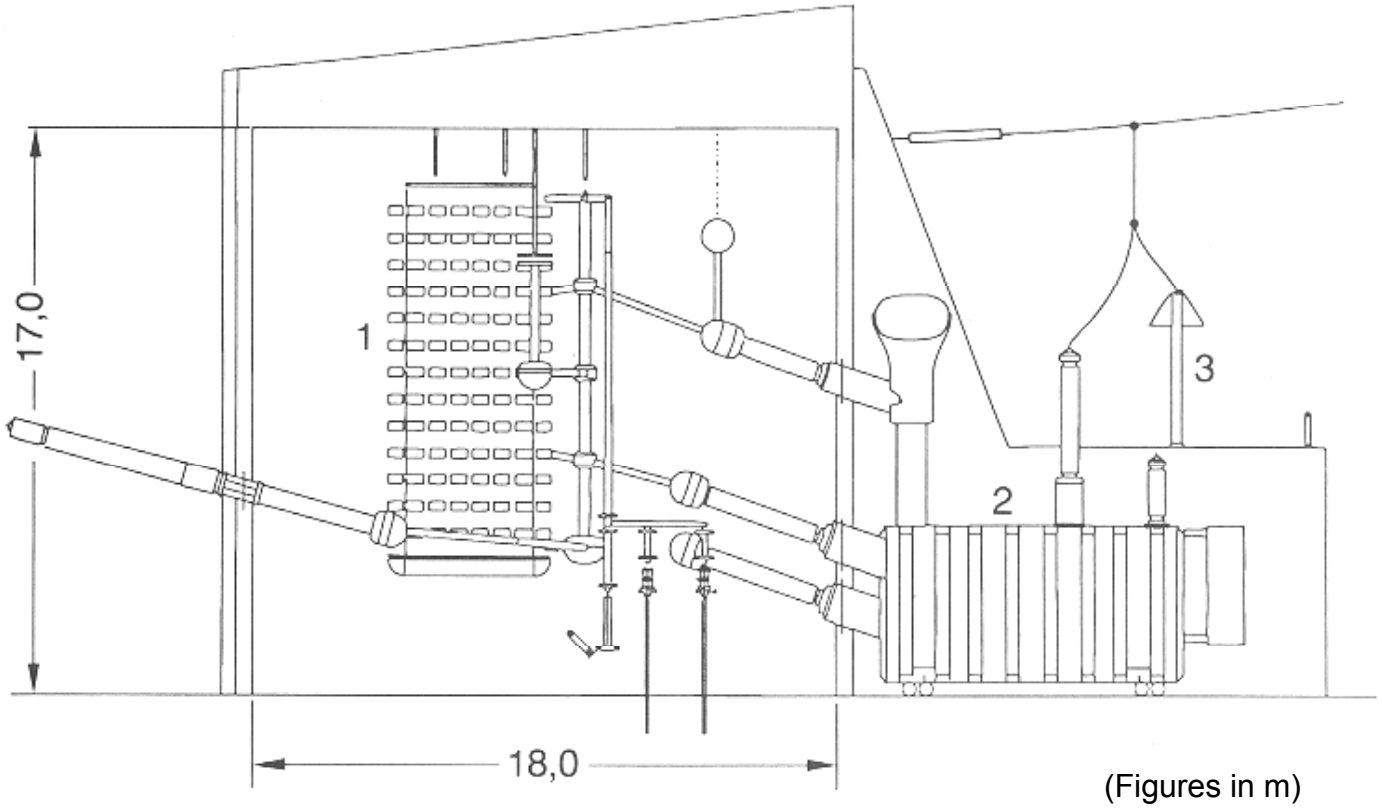


Cross-section of the valve hall of a 500-MW converter station (400 kV)
1 Valve towers 2 Converter transformer 3 Surge arrester

# HVDC Converters

800-kV-UHVDC-Transformator (Siemens, 2008) (for 800 kV / 5000 MW)

# HVDC Converters

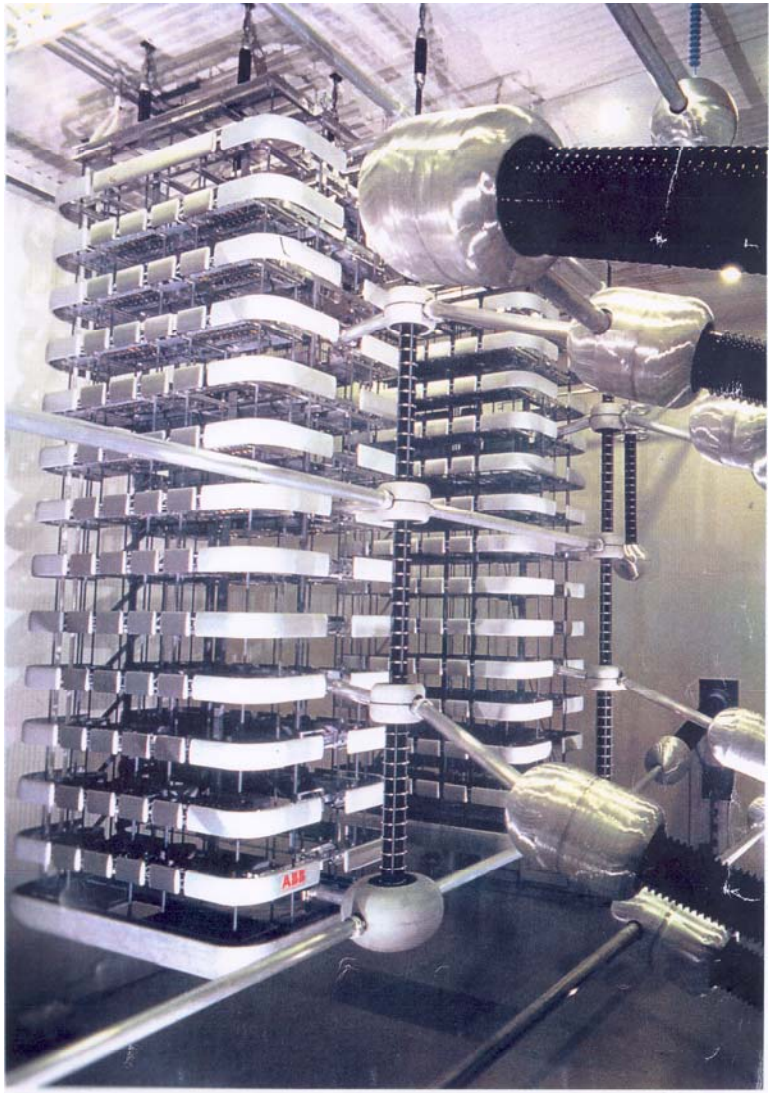

# HVDC Converters

# HVDC Converters

# HVDC Converters

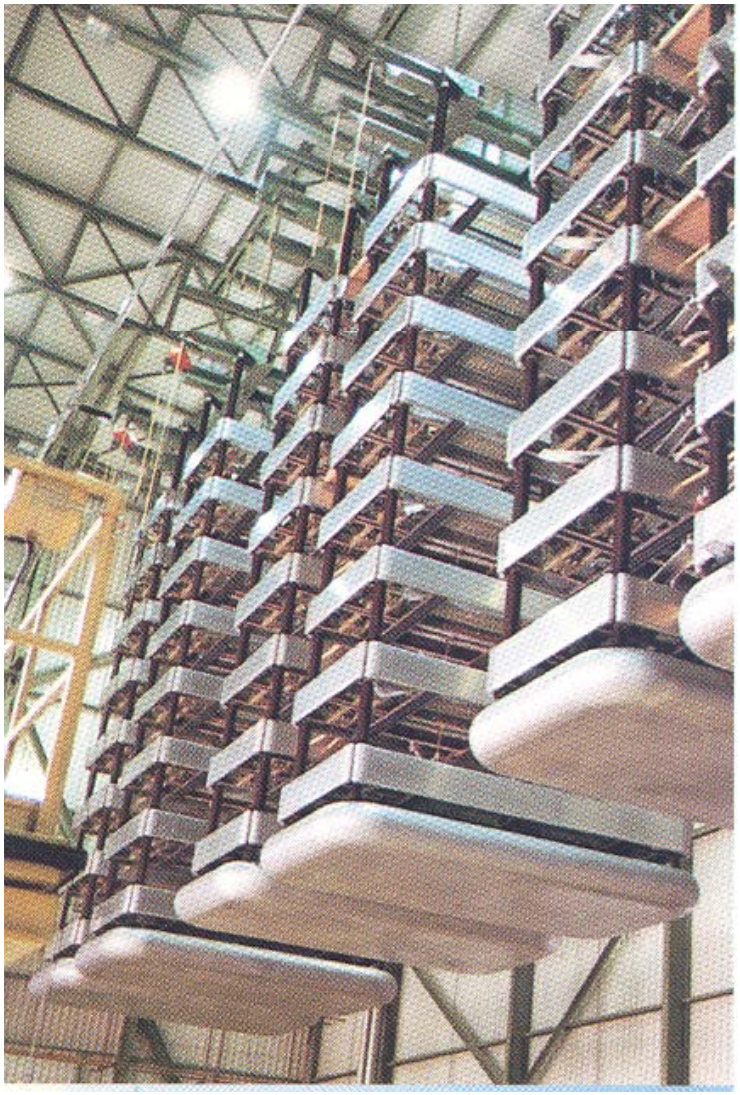

# HVDC Converters

# HVDC Converters

# HVDC Converters

# HVDC Converters

# HVDC Converters

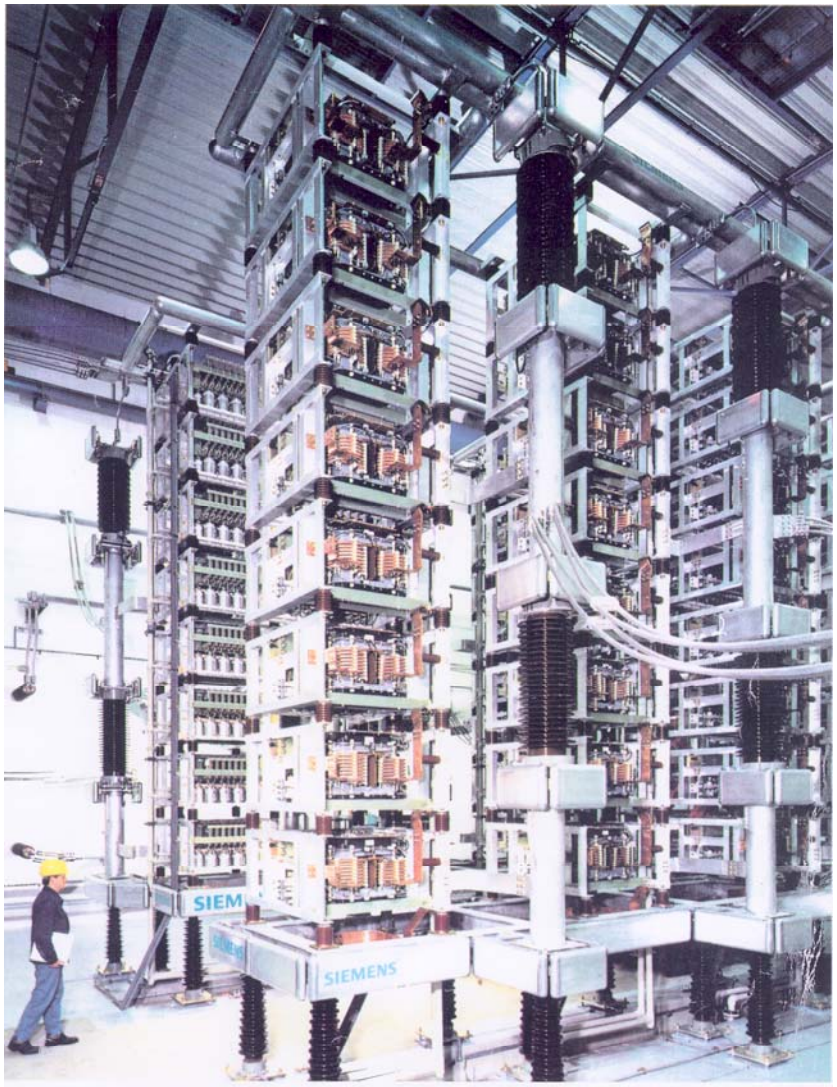

# HVDC Converters
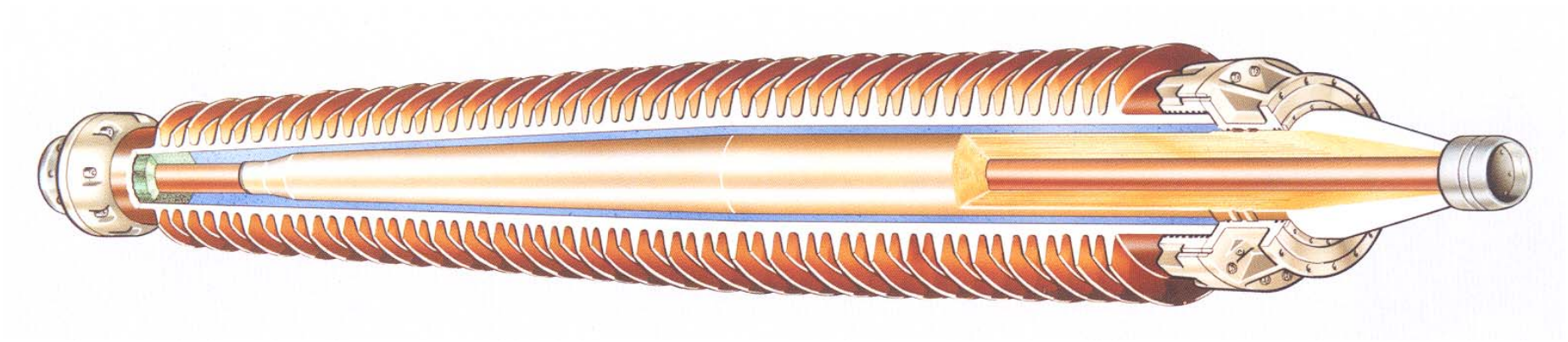
# EHV Bushing