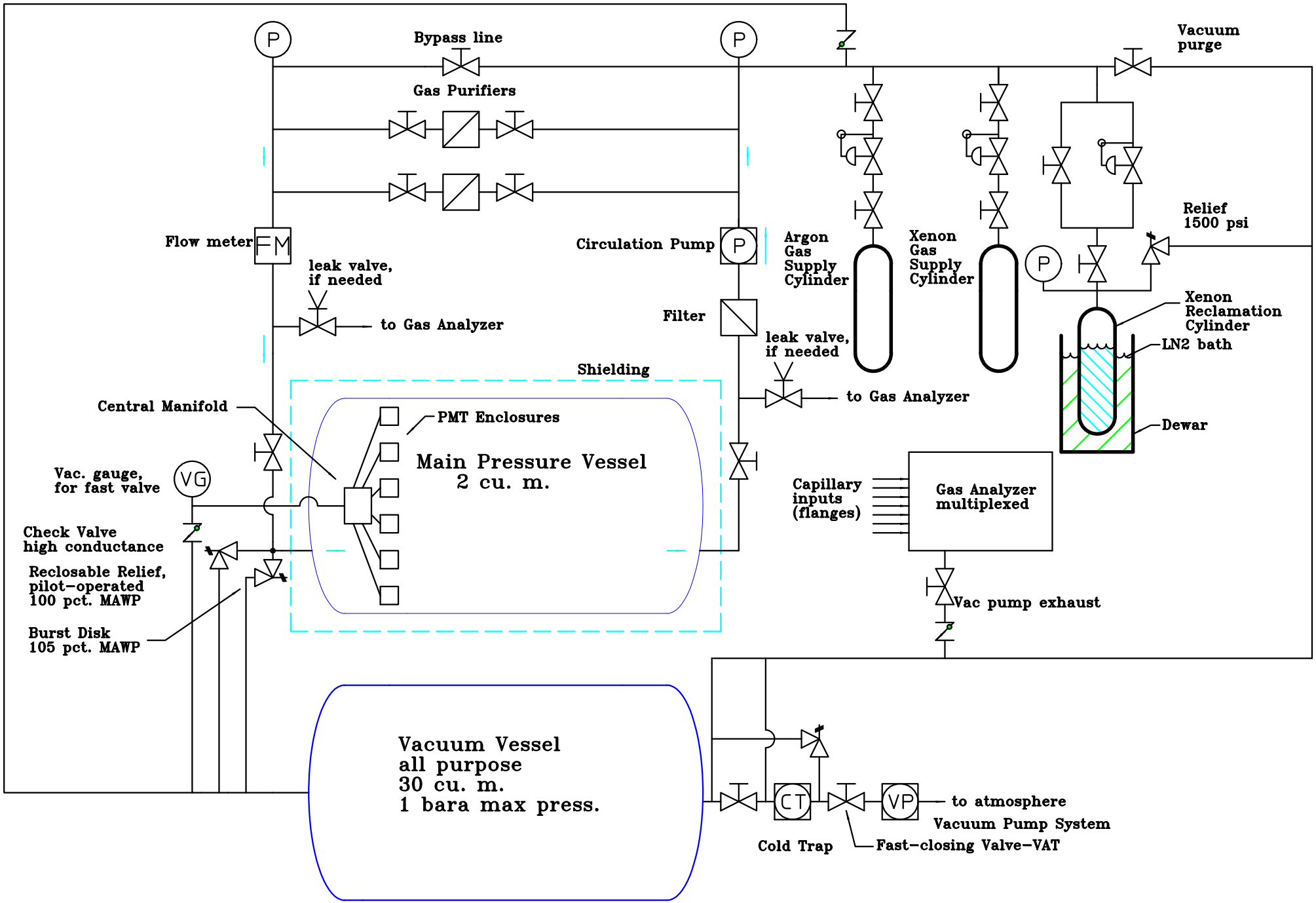
P
Bypass line
P
Vacuum purge
Gas Purifiers
Flow meter
FM
Circulation Pump
P
Argon Gas Supply Cylinder
Xenon Gas Supply Cylinder
P
Relief 1500 psi
leak valve, if needed
to Gas Analyzer
Filter
Xenon Reclamation Cylinder
LN2 bath
leak valve, if needed
to Gas Analyzer
Shielding
Central Manifold
PMT Enclosures
Main Pressure Vessel
2 cu. m.
Dewar
Vac. gauge, for fast valve
VG
Capillary inputs (flanges)
Gas Analyzer multiplexed
Check Valve high conductance
Reclosable Relief, pilot-operated 100 pct. MAWP
Burst Disk 105 pct. MAWP
Vac pump exhaust
Vacuum Vessel
all purpose
30 cu. m.
1 bara max press.
CT
VP
to atmosphere
Vacuum Pump System
Cold Trap
Fast-closing Valve-VAT