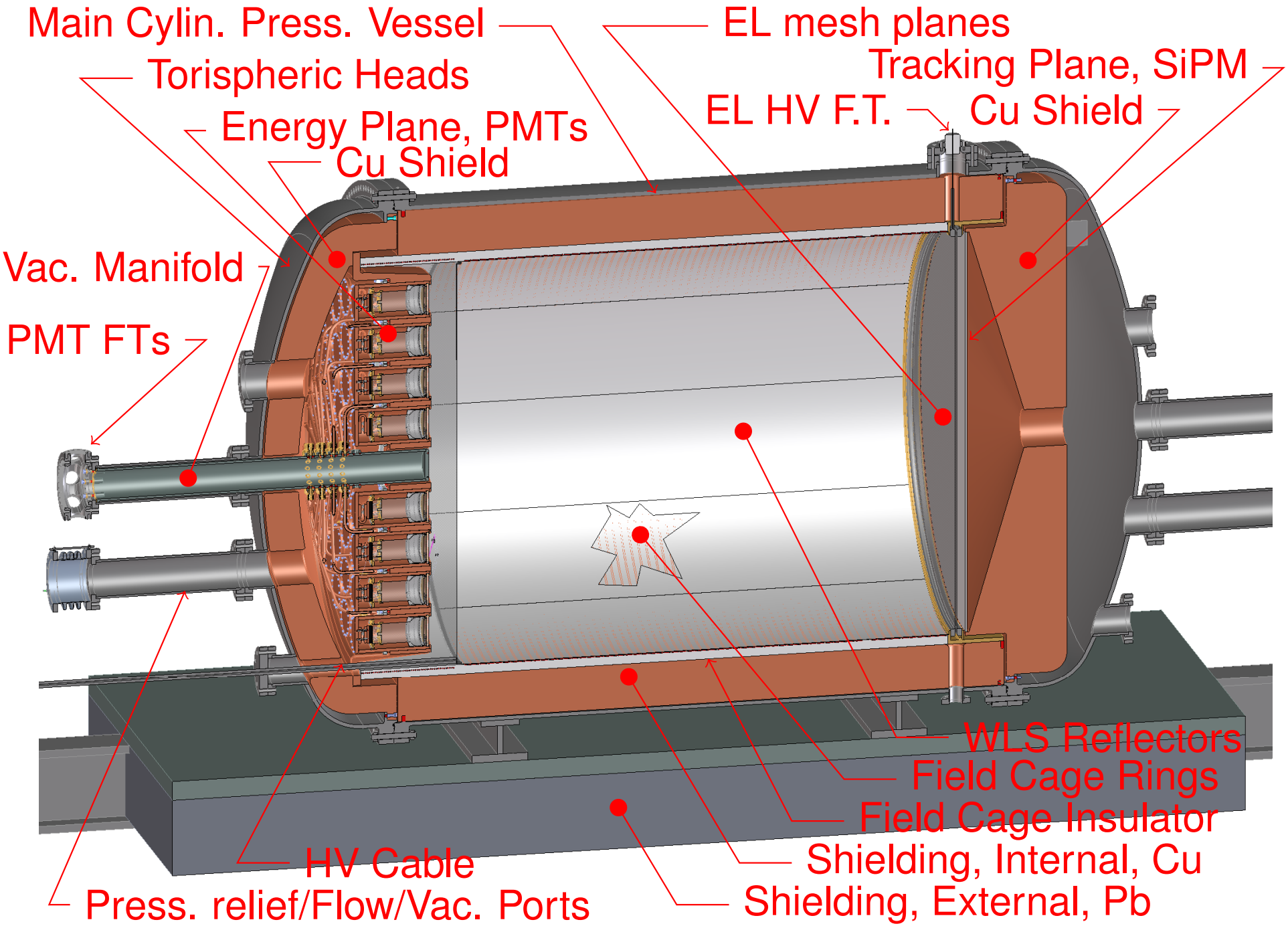
Main Cylin. Press. Vessel
EL mesh planes
Torispheric Heads
Tracking Plane, SiPM
EL HV F.T.
Cu Shield
Energy Plane, PMTs
Cu Shield
Vac. Manifold
PMT FTs
WLS Reflectors
Field Cage Rings
Field Cage Insulator
Shielding, Internal, Cu
HV Cable
Press. relief/Flow/Vac. Ports
Shielding, External, Pb