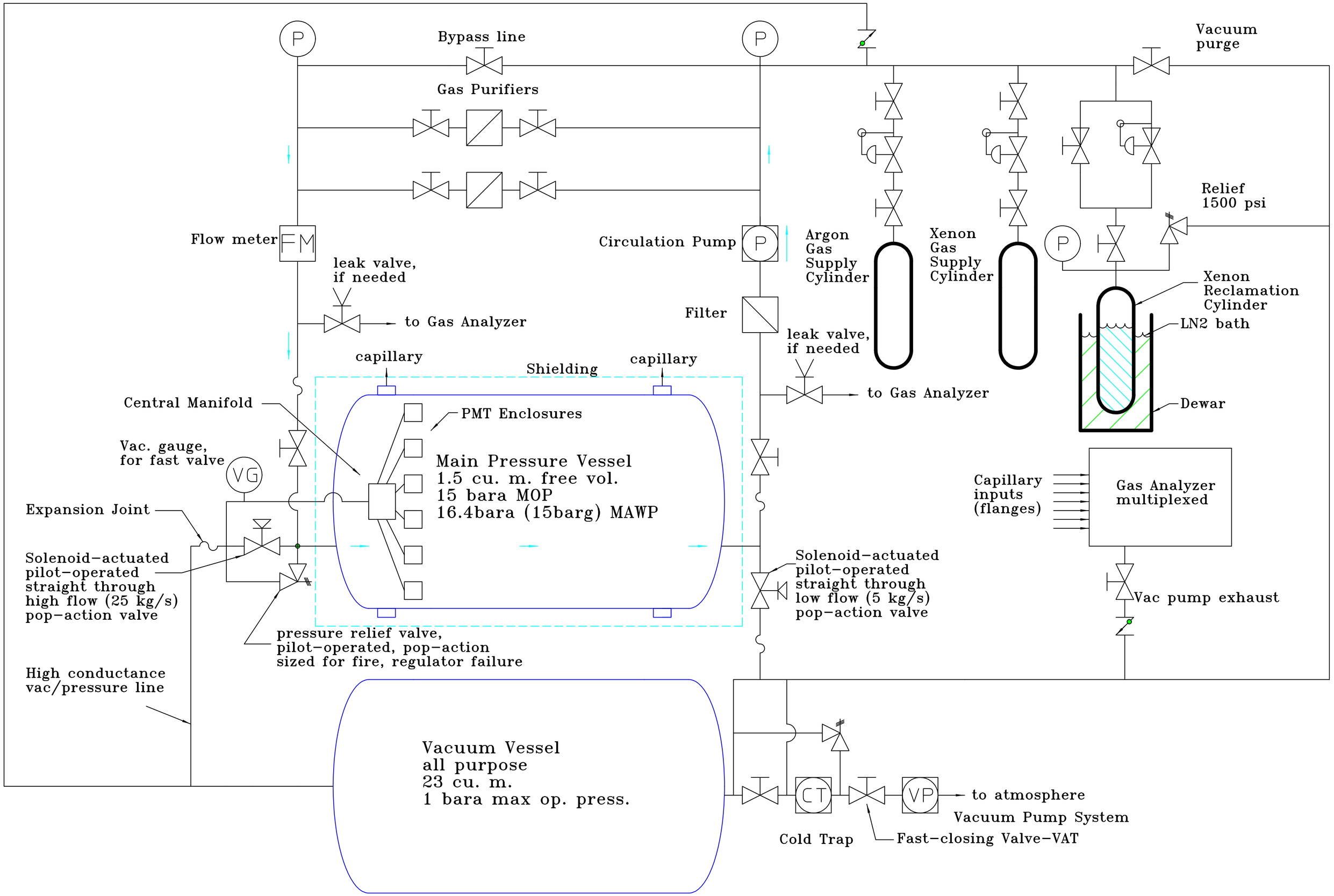
Bypass line
Gas Purifiers
Vacuum purge
Relief 1500 psi
Flow meter
FM
Circulation Pump
Argon Gas Supply Cylinder
Xenon Gas Supply Cylinder
leak valve, if needed
to Gas Analyzer
Filter
Xenon Reclamation Cylinder
LN2 bath
leak valve, if needed
to Gas Analyzer
capillary
Shielding
capillary
Central Manifold
PMT Enclosures
Dewar
Vac. gauge, for fast valve
VG
Main Pressure Vessel
1.5 cu. m. free vol.
15 bara MOP
16.4bara (15barg) MAWP
Capillary inputs (flanges)
Gas Analyzer multiplexed
Expansion Joint
Solenoid-actuated pilot-operated straight through high flow (25 kg/s) pop-action valve
Solenoid-actuated pilot-operated straight through low flow (5 kg/s) pop-action valve
Vac pump exhaust
pressure relief valve, pilot-operated, pop-action sized for fire, regulator failure
High conductance vac/pressure line
Vacuum Vessel
all purpose
23 cu. m.
1 bara max op. press.
CT
VP
to atmosphere
Vacuum Pump System
Cold Trap
Fast-closing Valve-VAT