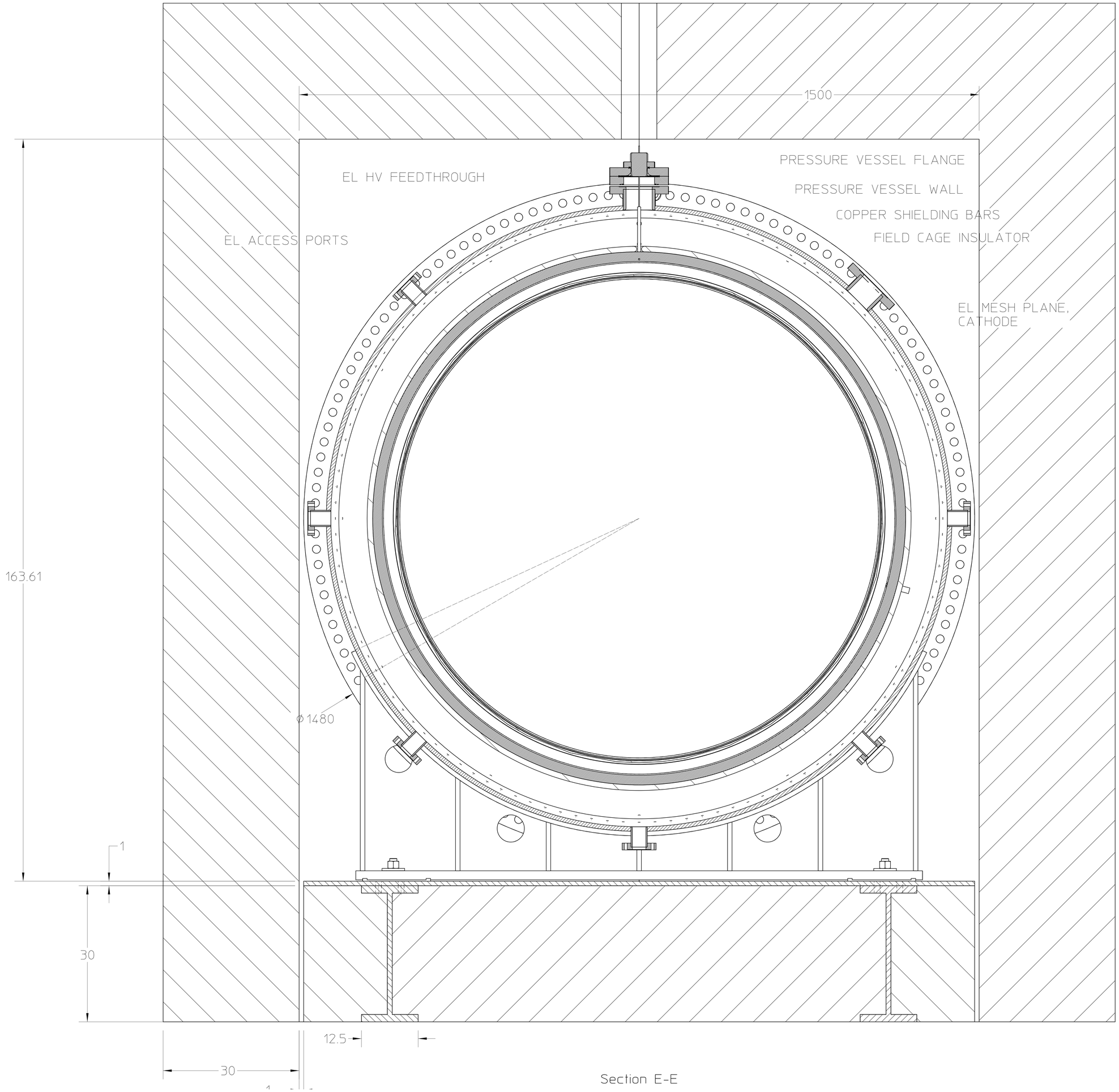
1500
PRESSURE VESSEL FLANGE
PRESSURE VESSEL WALL
COPPER SHIELDING BARS
FIELD CAGE INSULATOR
EL HV FEEDTHROUGH
EL ACCESS PORTS
EL MESH PLANE,
CATHODE
163.61
ϕ1480
1
30
12.5
30

Section E-E