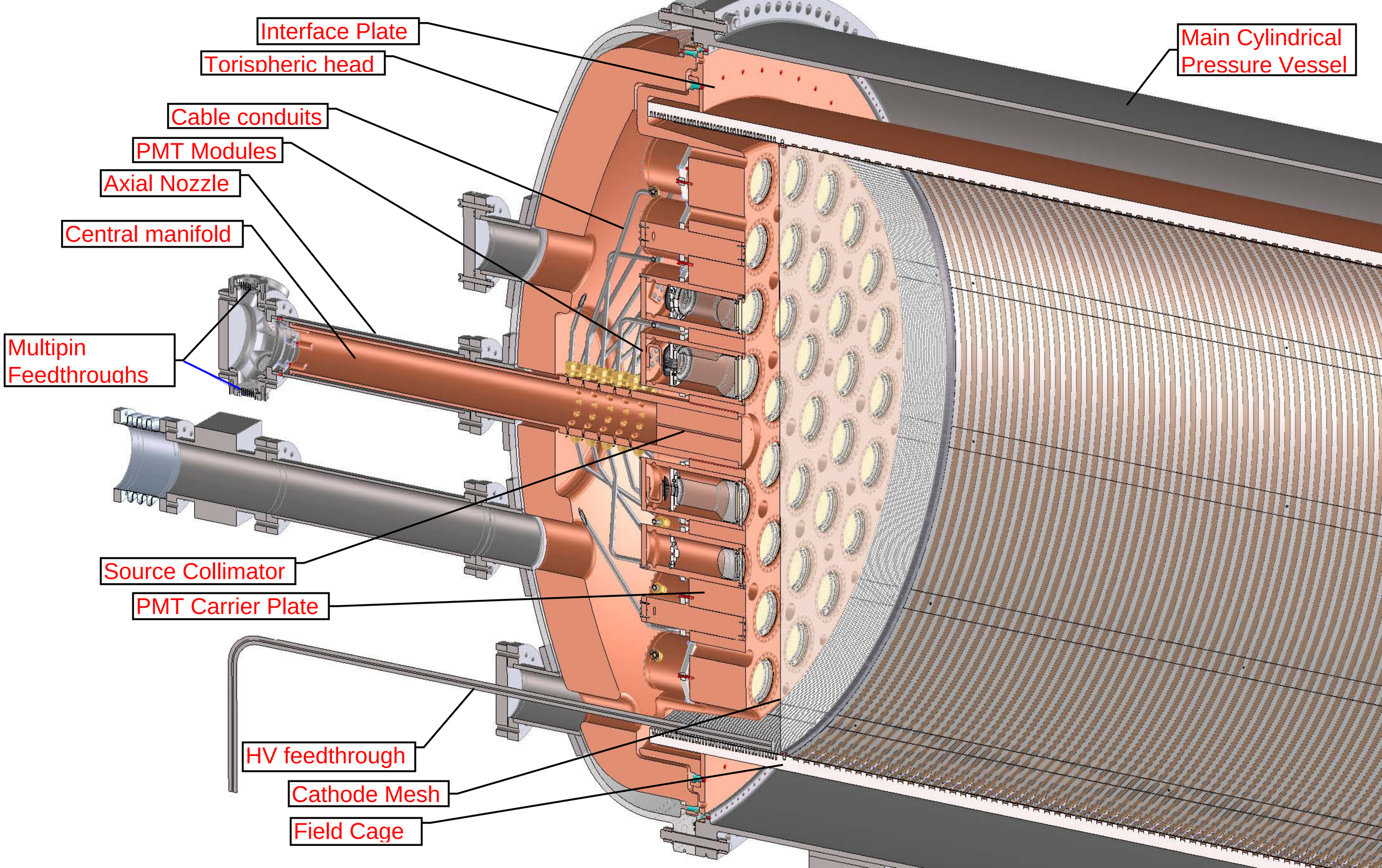
Interface Plate
Torispheric head
Cable conduits
PMT Modules
Axial Nozzle
Central manifold
Multipin Feedthroughs
Source Collimator
PMT Carrier Plate
HV feedthrough
Cathode Mesh
Field Cage
Main Cylindrical Pressure Vessel