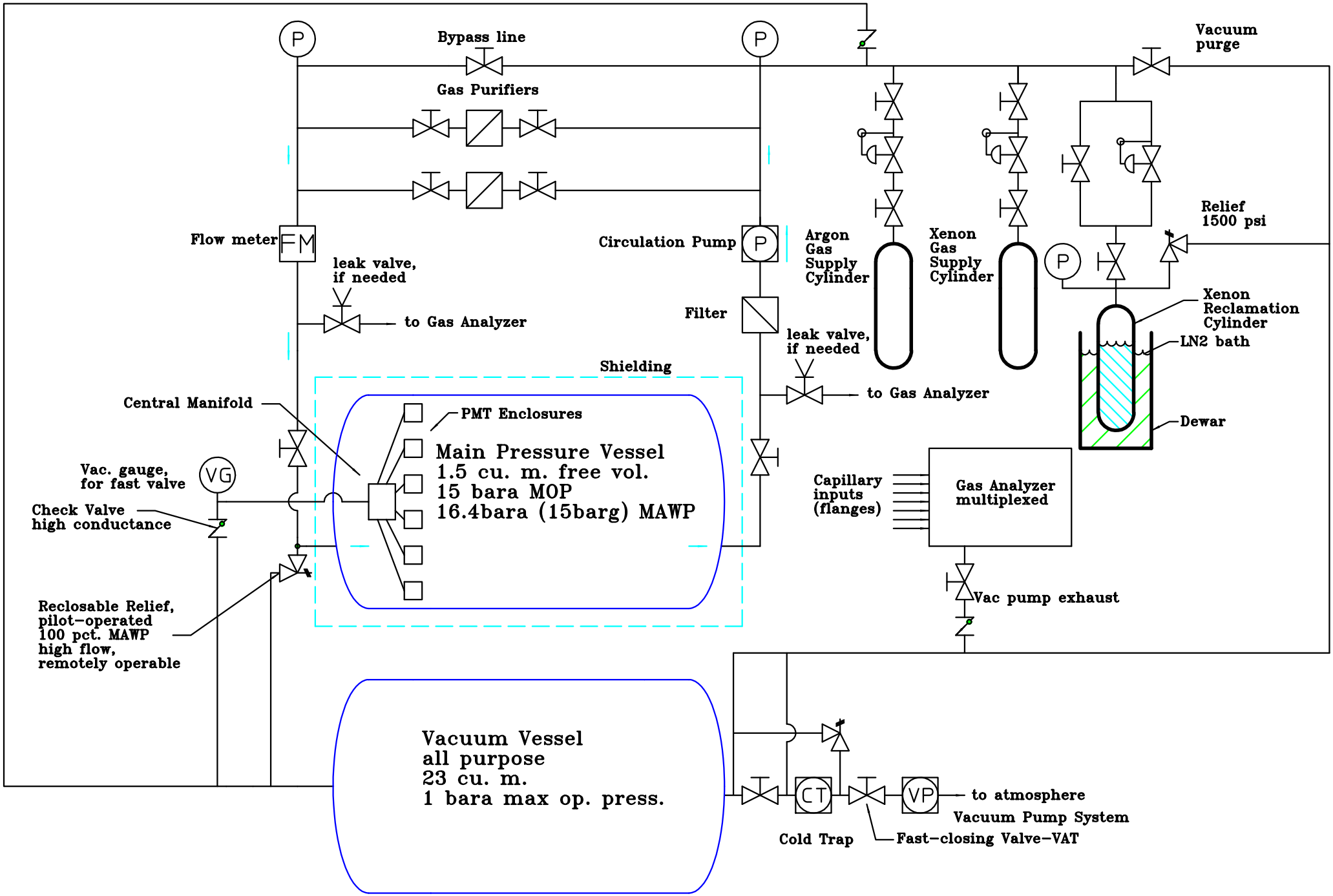
P
Bypass line
P
Vacuum purge
Gas Purifiers
Flow meter
FM
Circulation Pump
P
Argon Gas Supply Cylinder
Xenon Gas Supply Cylinder
P
Relief 1500 psi
leak valve, if needed
to Gas Analyzer
Filter
Xenon Reclamation Cylinder
LN2 bath
leak valve, if needed
Shielding
to Gas Analyzer
Central Manifold
PMT Enclosures
Main Pressure Vessel
1.5 cu. m. free vol.
15 bara MOP
16.4bara (15barg) MAWP
Dewar
Vac. gauge, for fast valve
VG
Capillary inputs (flanges)
Gas Analyzer multiplexed
Check Valve high conductance
Vac pump exhaust
Reclosable Relief, pilot-operated 100 pct. MAWP high flow, remotely operable
Vacuum Vessel
all purpose
23 cu. m.
1 bara max op. press.
CT
VP
to atmosphere
Vacuum Pump System
Cold Trap
Fast-closing Valve-VAT