PRODUCED BY AN AUTODESK EDUCATIONAL PRODUCT

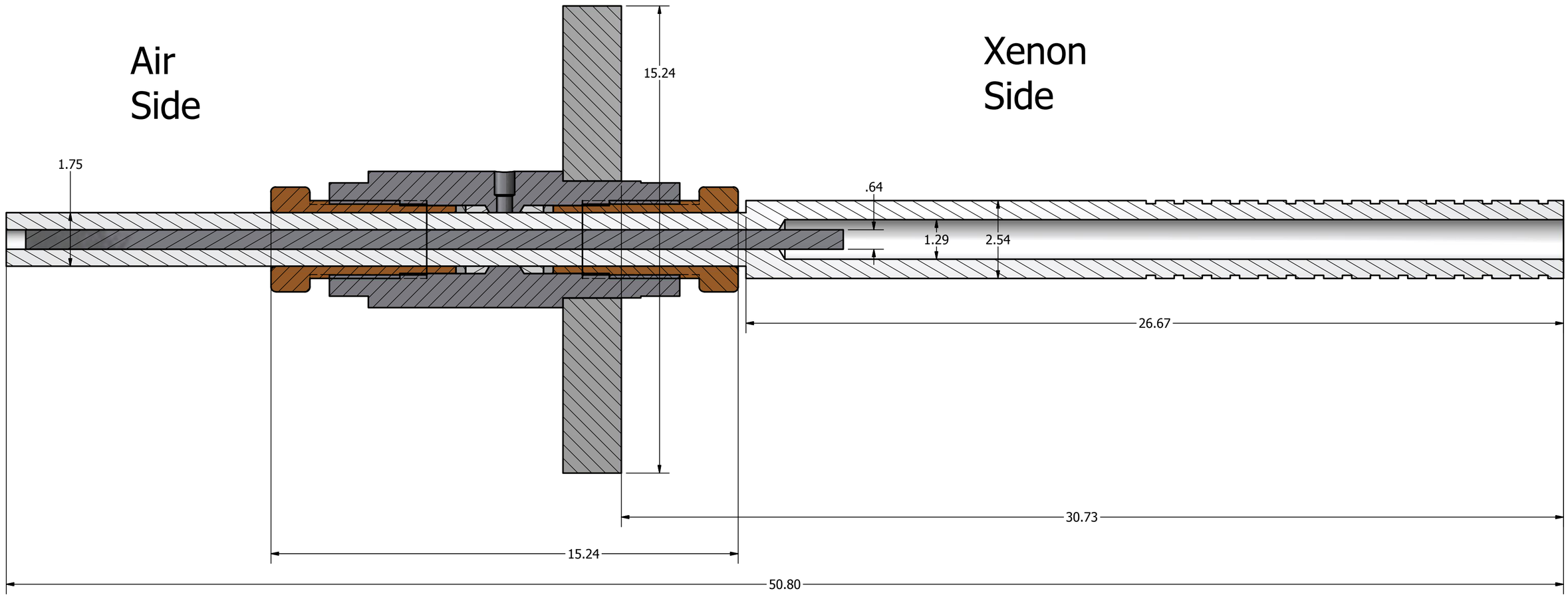

SECTION G-G
SCALE 1 : 1

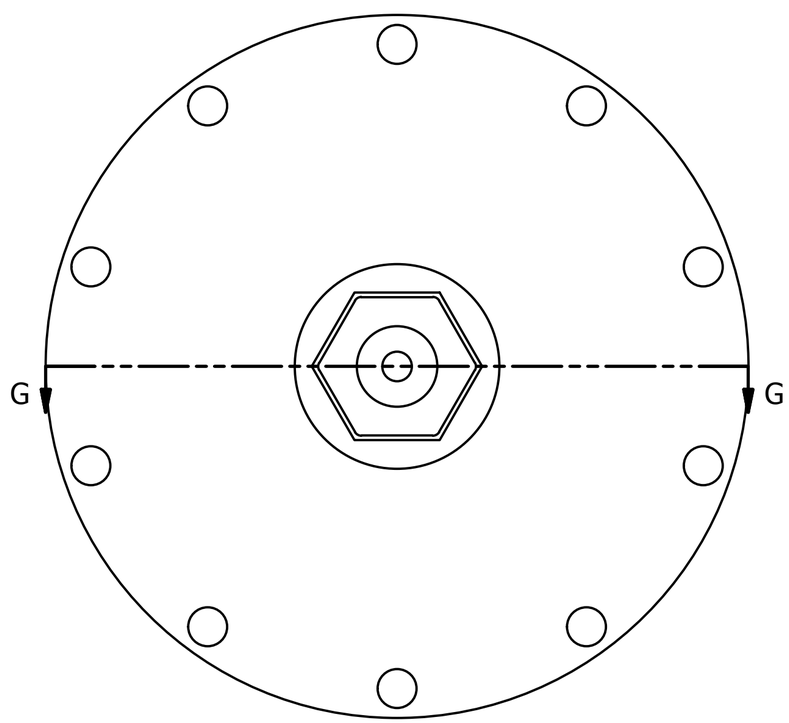

DRAWN Clement Sofka	10/24/2011	
CHECKED		TITLE Cathode HV Feedthru
QA		
MFG		
APPROVED		SIZE C / DWG NO NEXT100 Field Cage rev_2 / REV
		SCALE / SHEET 4 OF 4

PRODUCED BY AN AUTODESK EDUCATIONAL PRODUCT
PRODUCED BY AN AUTODESK EDUCATIONAL PRODUCT
PRODUCED BY AN AUTODESK EDUCATIONAL PRODUCT