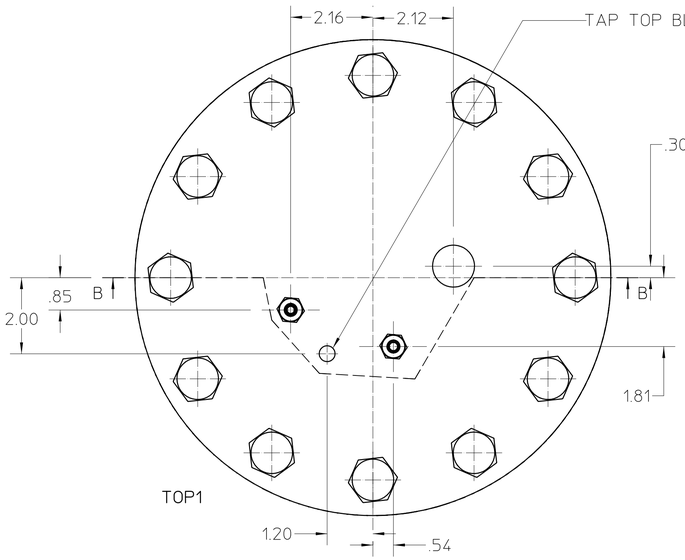

TOP1

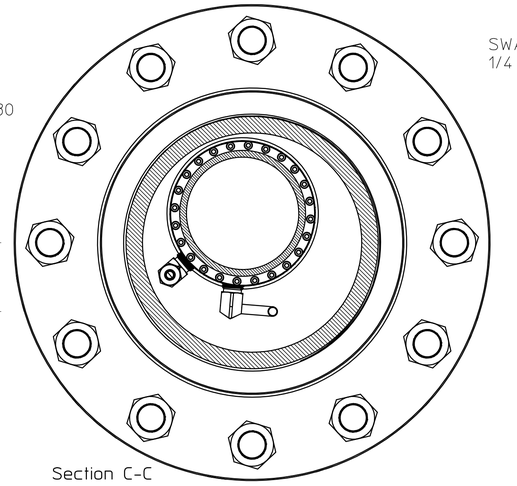

Section C-C

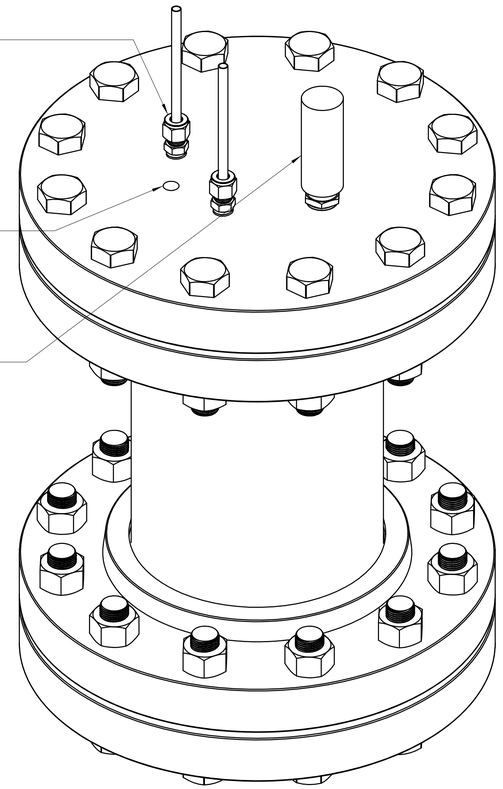

IS01

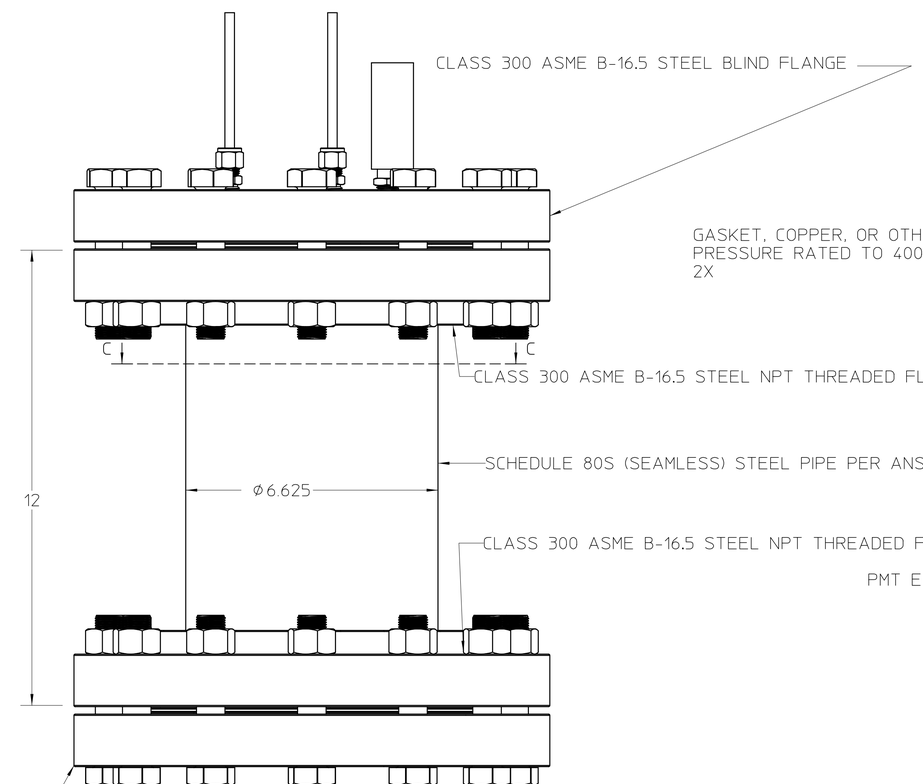

FRONT1

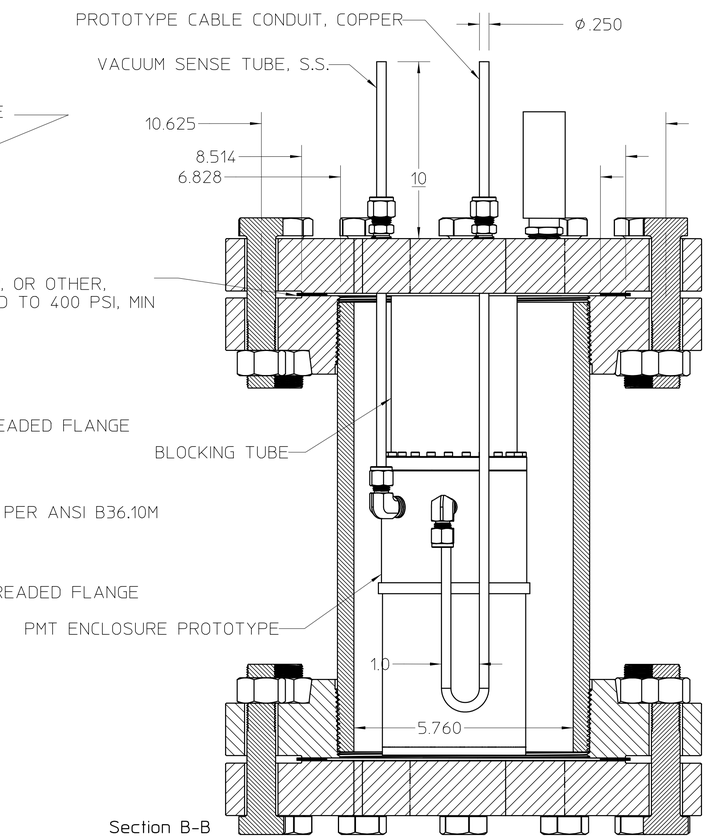

Section B-B

NOTES:

1. MAWP = 400 PSIG, ADJUST PRESSURE RELIEF VALVE TO THIS VALUE
2. PRESSURE TEST, HYDROSTATIC, TO 600 PSIG USING CALIBRATED PRESSURE GAUGE (PORTS PLUGGED, NO INTERNAL COMPONENTS OR TUBES)
3. MATERIAL CERTIFICATIONS REQUIRED FOR ALL PRESSURE COMPONENTS

REV	AUTHOR	APPROVER	DATE	CHANGE DESCRIPTION
–	DBSHUMAN	???	???	INITIAL REVISION

REQD	ITEM	PART NO.	DESCRIPTION

UNLESS OTHERWISE SPECIFIED
TOLERANCES: X±.1 .XX±.05 .XXX±.005; FRACTIONS: ± -/--; ANGLES: ± -.-°/INCH; MACH. SURFS.: 125√ OR BETTER
REF: ASME Y14.5M-1994, THREADS ARE CLASS 2
BREAK EDGES .016 MAX. ON MACHINED WORK
REMOVE BURRS, WELD SPLATTER & LOOSE SCALE

PROJECT NAME: GENERAL
PROJECT NUMBER: NONE
DO NOT SCALE PRINT
SCALE: 1 : 2
CATEGORY CODE: XX0000
THIRD ANGLE PROJECTION

ERNEST ORLANDO LAWRENCE
BERKELEY NATIONAL LABORATORY
UNIVERSITY OF CALIFORNIA

NEXT-100 XENON TPC
ENERGY PLANE- PMT ENCLOSURES
PRESSURE TEST CHAMBER ASSEMBLY

SHEET 1 OF 1 | SIZE: D | DWG NO: PMT-TEST-1 | REV –