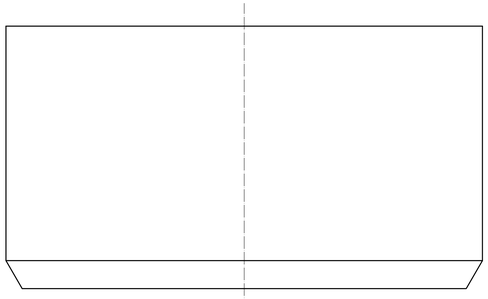

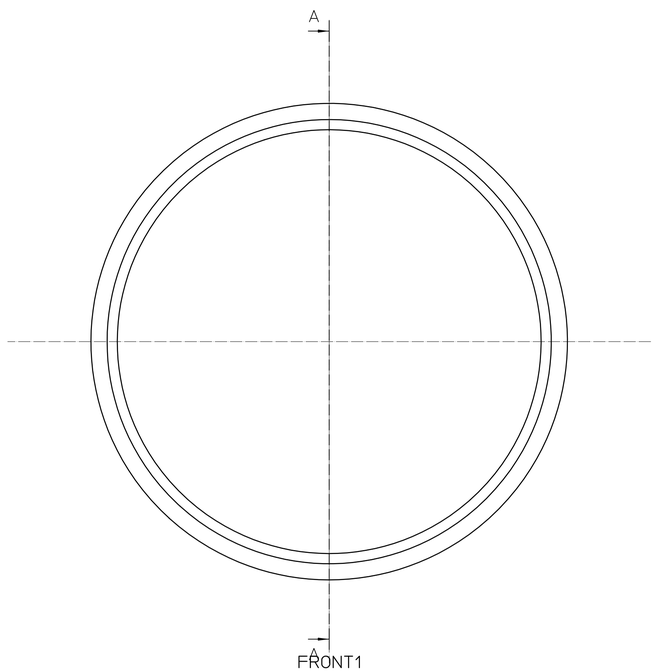

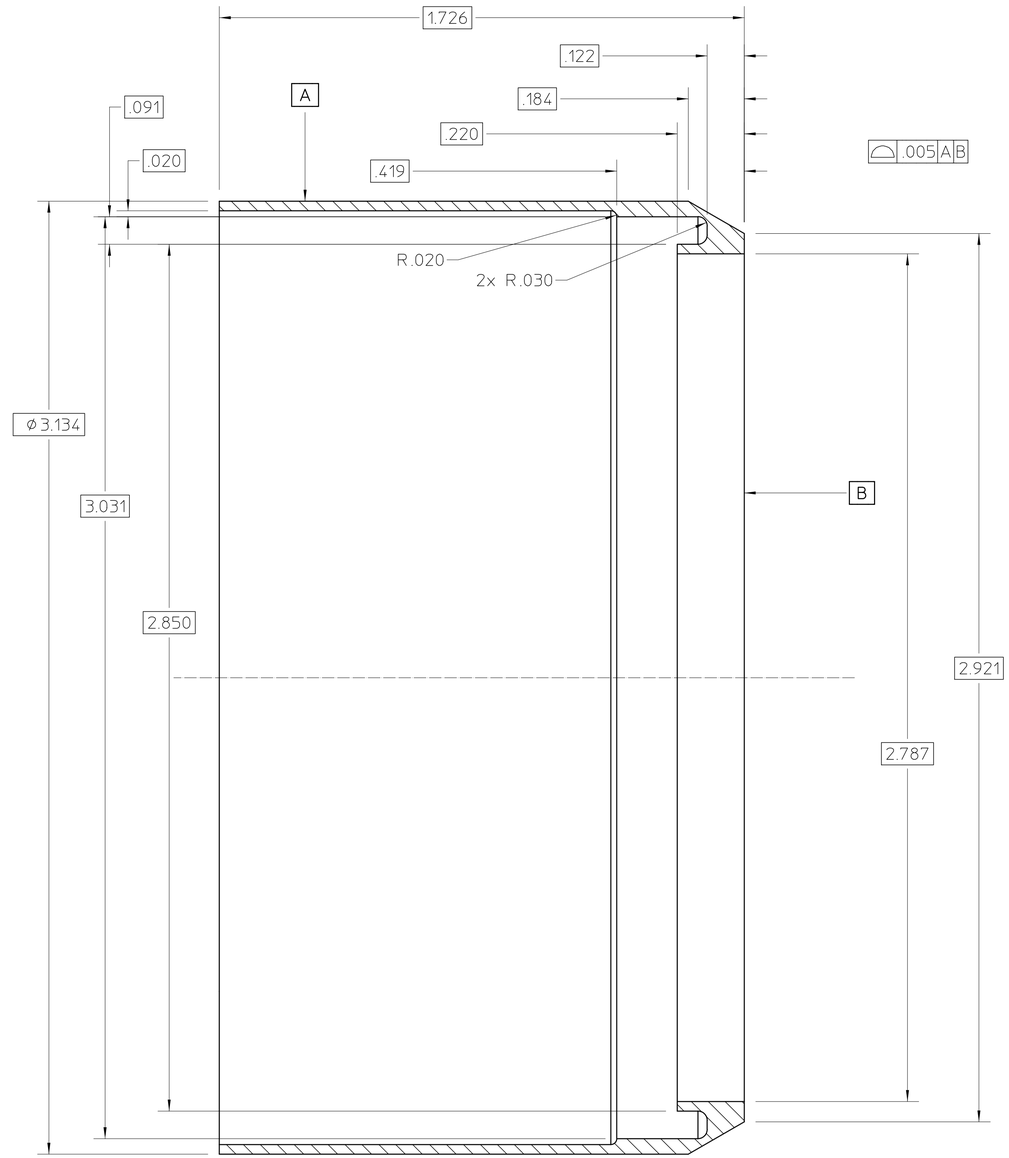

Section A-A
SCALE 4:1

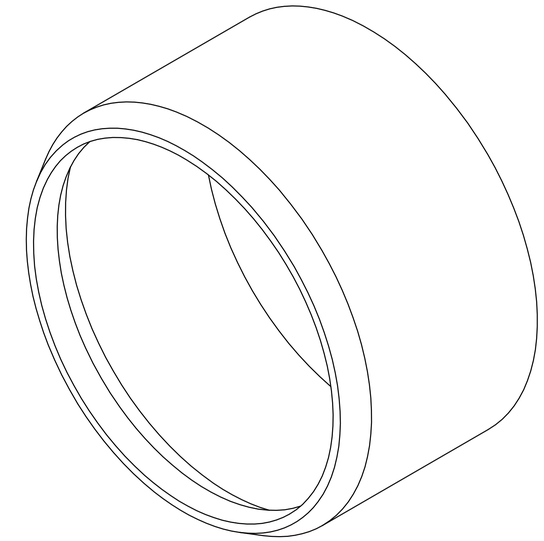

MATERIAL: ULTEM 1000 (PEI)

REV	AUTHOR	APPROVER	DATE	CHANGE DESCRIPTION
–	D_SHUMAN	???	???	INITIAL REVISION

REQD	ITEM	PART NO.	DESCRIPTION

UNLESS OTHERWISE SPECIFIED
TOLERANCES: .X± .- .XX± .-- .XXX± .---
FRACTIONS: ± -/--
ANGLES: ± -.-°/INCH
MACH. SURFS.: 125✓ OR BETTER
REF: ASME Y14.5M-1994, THREADS ARE CLASS 2
BREAK EDGES .016 MAX. ON MACHINED WORK
REMOVE BURRS, WELD SPLATTER & LOOSE SCALE

PROJECT NAME: GENERAL
PROJECT NUMBER: NONE
DO NOT SCALE PRINT
SCALE: 2 : 1
CATEGORY CODE: RP3111
THIRD ANGLE PROJECTION

ERNEST ORLANDO LAWRENCE
BERKELEY NATIONAL LABORATORY
UNIVERSITY OF CALIFORNIA

NEXT-100 XENON TPC
ENERGY PLANE- PMT ENCLOSURES
PMT INSULATOR

SHEET 1 OF 1 | SIZE: D | DWG NO: XXX-3 | REV –