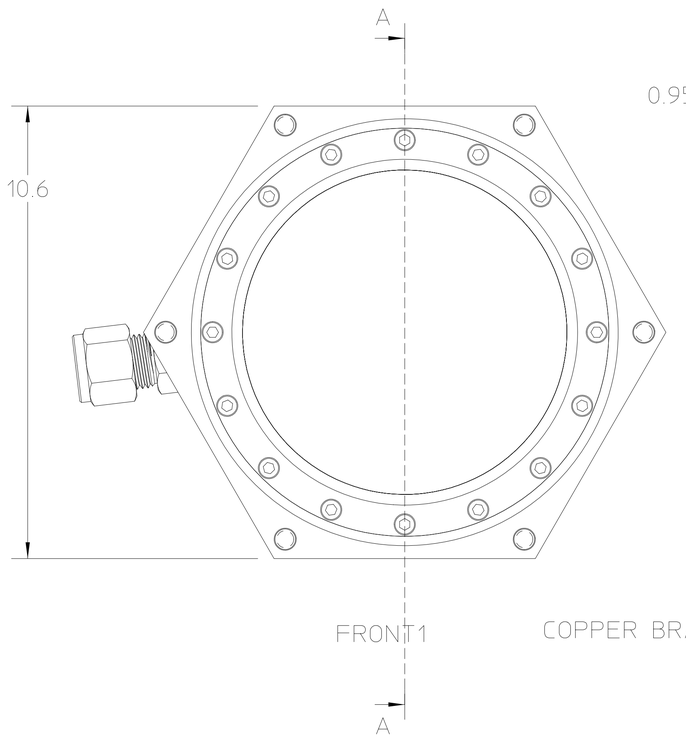

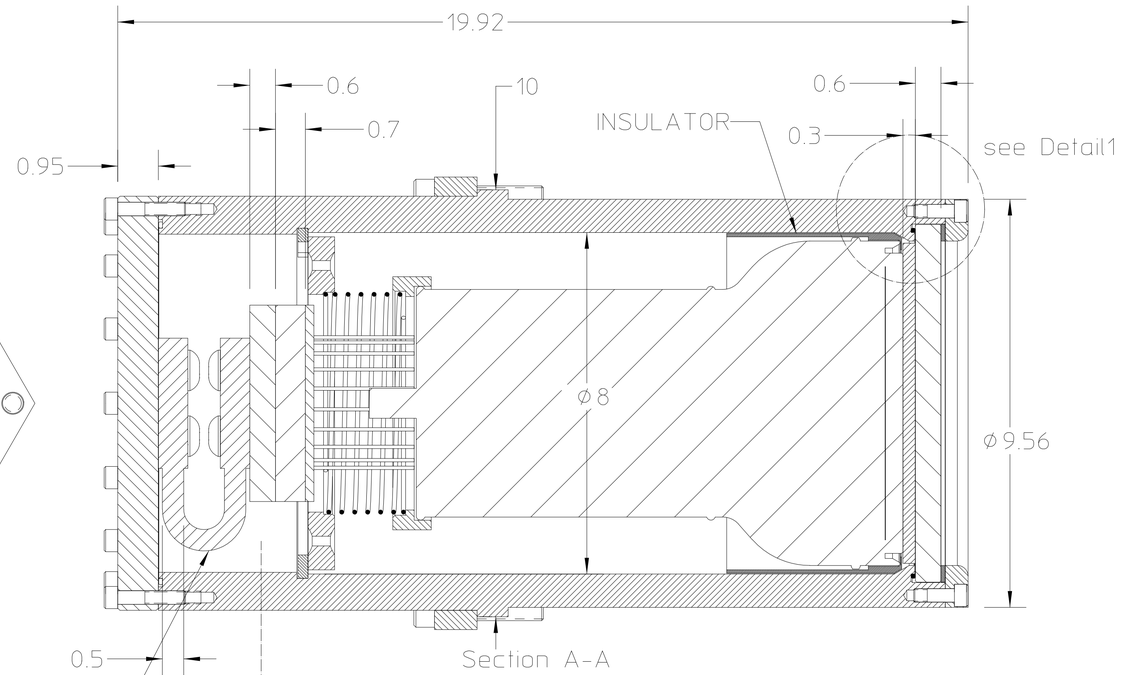

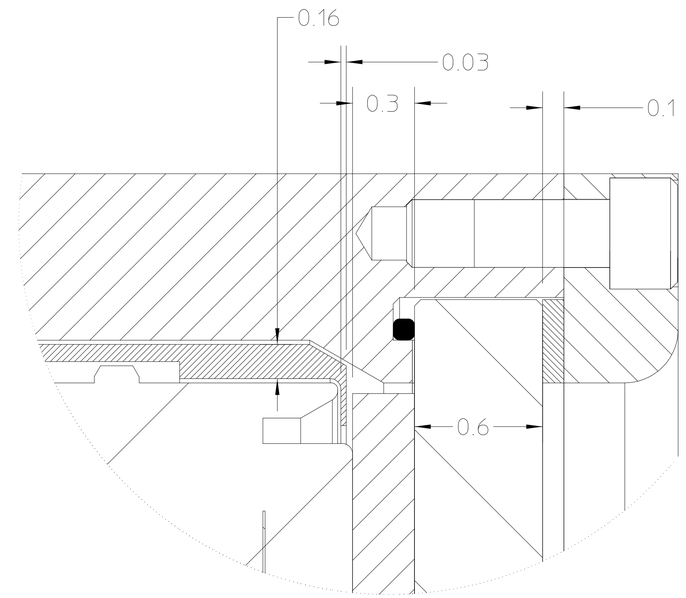

Detail1
SCALE 5:1

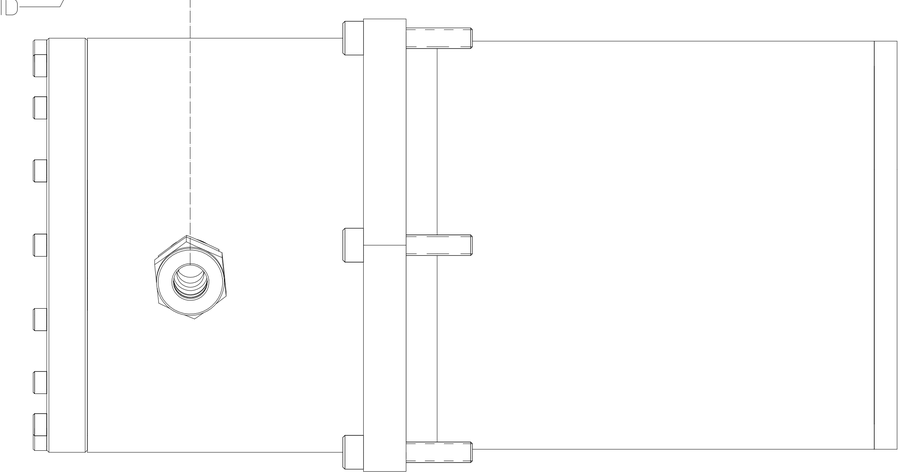

CLAMPING RING

LEFT1