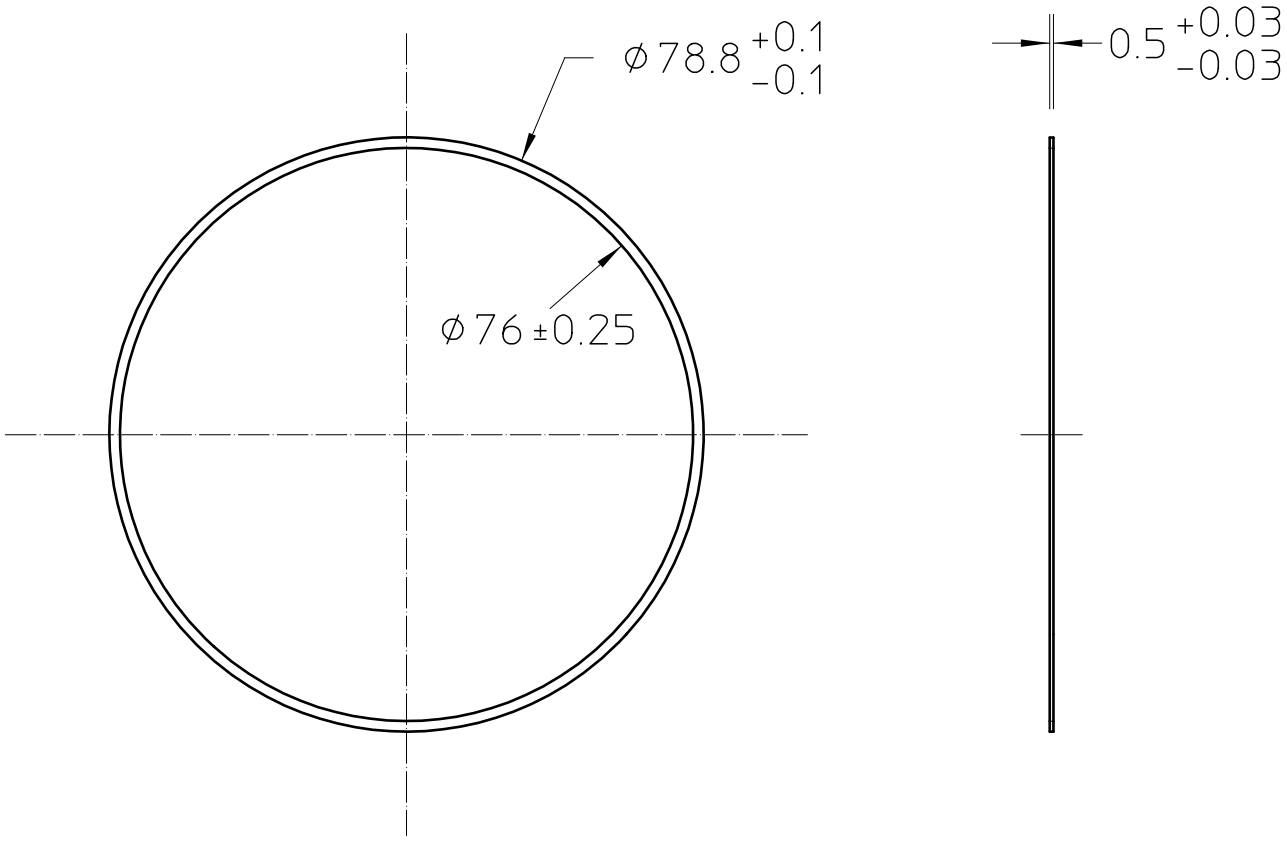

MAT 2: ,	NOTES:
MAT 1: , PEEK, VIRGIN, UNFILLED	NOTES:

REV	AUTHOR	APPROVER	DATE	CHANGES
-	dbshuman			INITIAL

UNLESS OTHERWISE SPECIFIED
REF:ASME Y14.5M-1994, THREADS ARE CLASS 2
BREAK EDGES .016 MAX. ON MACHINED WORK
REMOVE BURRS, WELD SPLATTER & LOOSE SCALE

TOLERANCES: .X±.- .XX±.-- .XXX±.--- ; FRACTIONS: ± -/-- ; ANGLES: ± -.-°/INCH ; MACH. SURFS.: 125✓ OR BETTER

PROJECT NAME: PHYSICS RESEARCH

UNIQUE NUMBER: RP-0000-0469

DO NOT SCALE PRINT — SCALE: 1 : 1 — CATEGORY CODE: RP3111

THIRD ANGLE PROJECTION

ERNEST ORLANDO LAWRENCE
BERKELEY NATIONAL LABORATORY
UNIVERSITY OF CALIFORNIA

NEXT-100 XENON TIME PROJECTION CHAMBER
ENERGY PLANE - PMT ENCLOSURES
WINDOW SEAT RING

SHEET 1 OF 1 — SIZE: A — DWG NO: 26K614 — REV —