DIMS IN MM

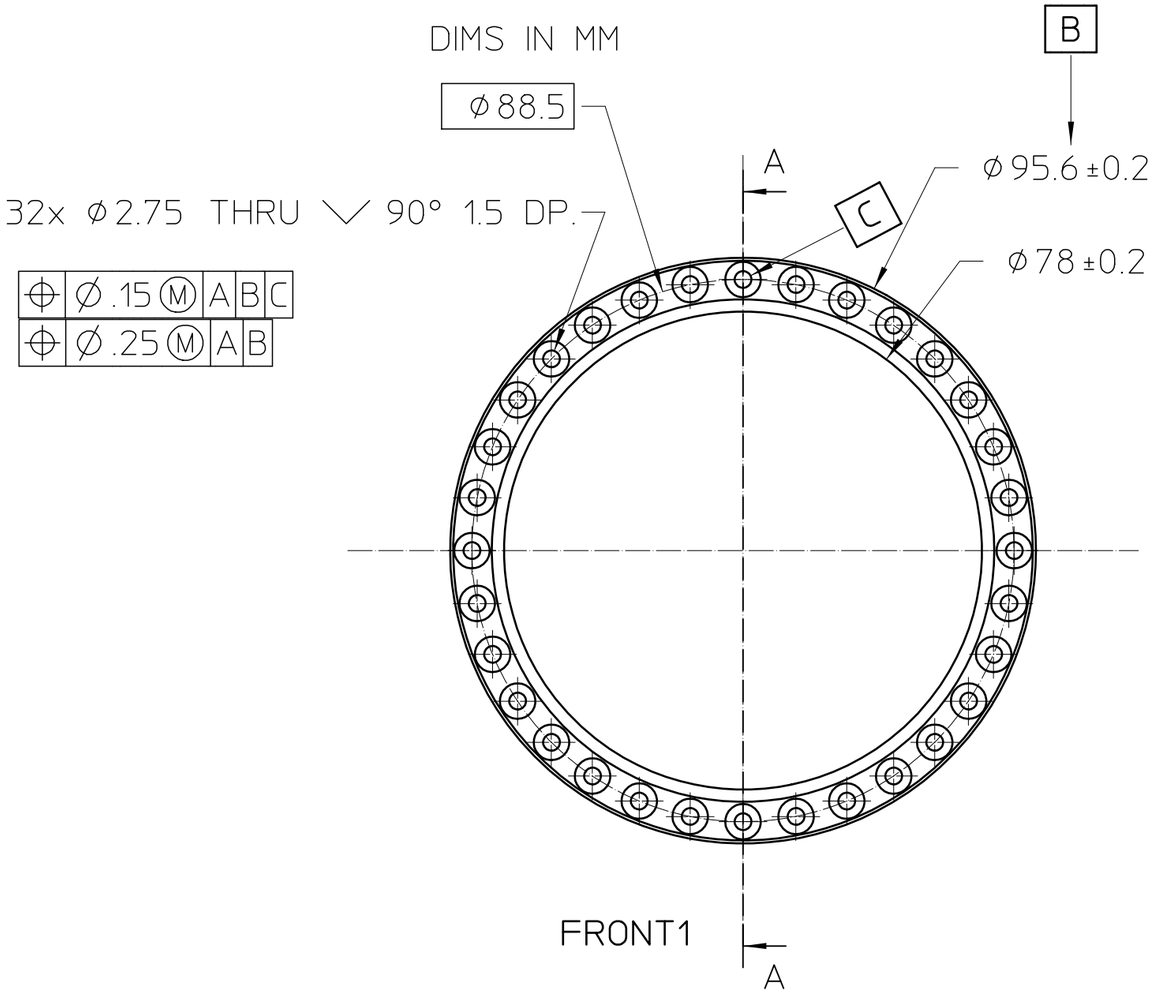


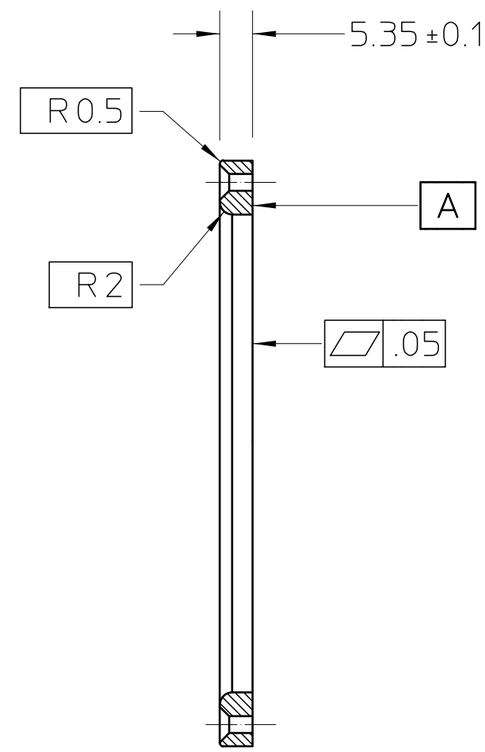


Section A-A

SHOWN ON: 26K610

| | | | | |
|---|---|---|---|---|
| | | | | |
| | | | | |
| | | | | |
| | | | | |
| B | dbshuman | | | B.C CHANGED FROM 88 TO 88.5MM |
| A | dbshuman | dbshuman | 9/5/12 | INITIAL VERSION (NO REVISION) |
| VER | AUTHOR | APPROVER | DATE | CHANGE DESCRIPTION |

UNLESS OTHERWISE SPECIFIED

TOLERANCES: .X±.05 .XX±.01 .XXX±.005; FRACTIONS: ± 1/64; ANGLES: ± 0.2°; MACH. SURFS.: 125✓ OR BETTER

REF:ASME Y14.5M-1994, THREADS ARE CLASS 2

BREAK EDGES .016 MAX. ON MACHINED WORK

REMOVE BURRS, WELD SPLATTER & LOOSE SCALE

MAT 2: , NOTES:

MAT 1: , COPPER, OFE NOTES:

PROJECT NAME:

PROJECT NUMBER:

DO NOT SCALE PRINT

SCALE: 1 : 1

CATEGORY CODE: RP 31 11

THIRD ANGLE PROJECTION

ERNEST ORLANDO LAWRENCE BERKELEY NATIONAL LABORATORY
UNIVERSITY OF CALIFORNIA

NEXT-100 XENON TIME PROJECTION CHAMBER

ENERGY PLANE - PMT ENCLOSURES

WINDOW CLAMP

SHEET 1 OF 1 | SIZE: B | DWG NO: 26K609 | VER B