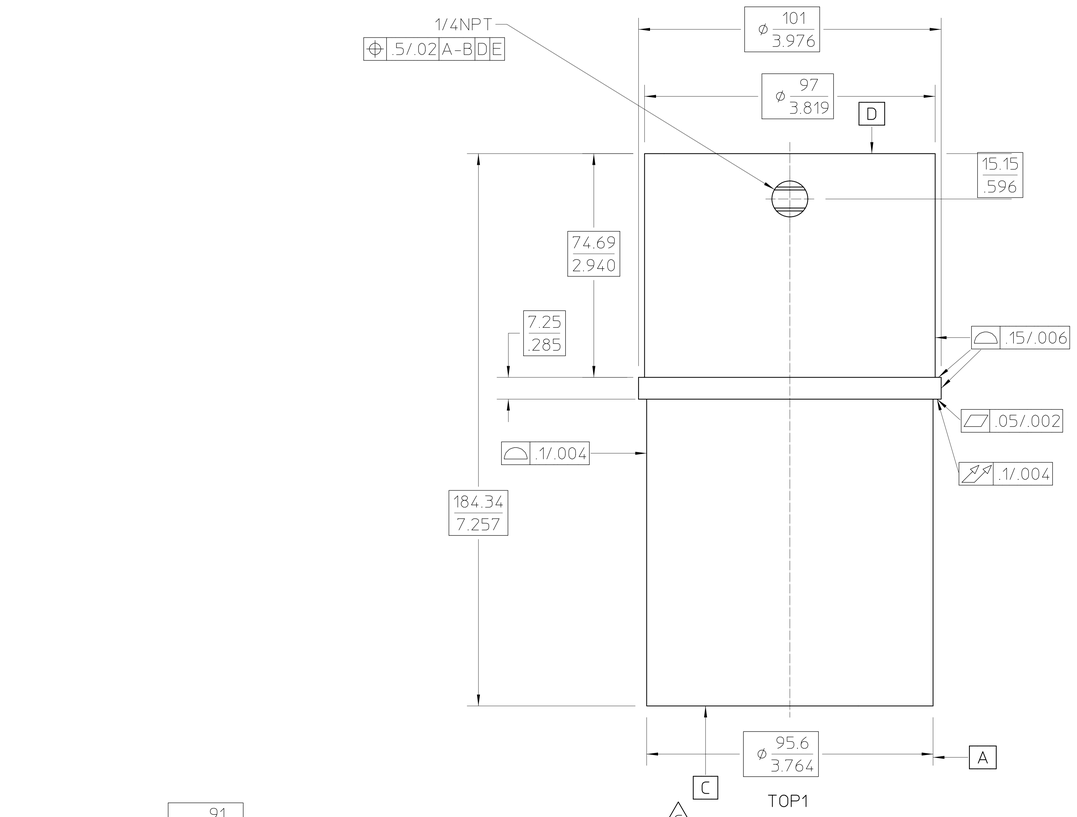


DIMENSIONS IN MM/IN

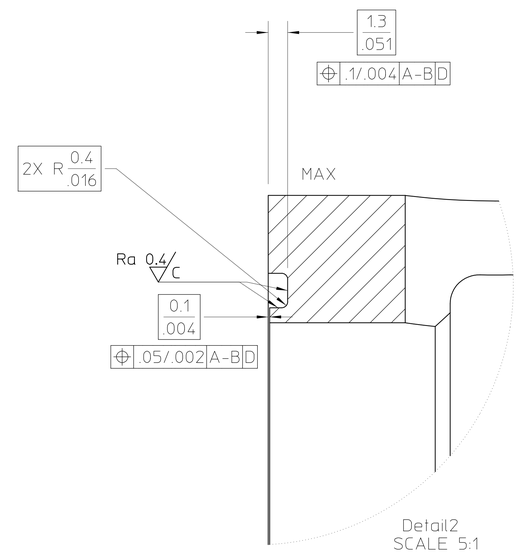


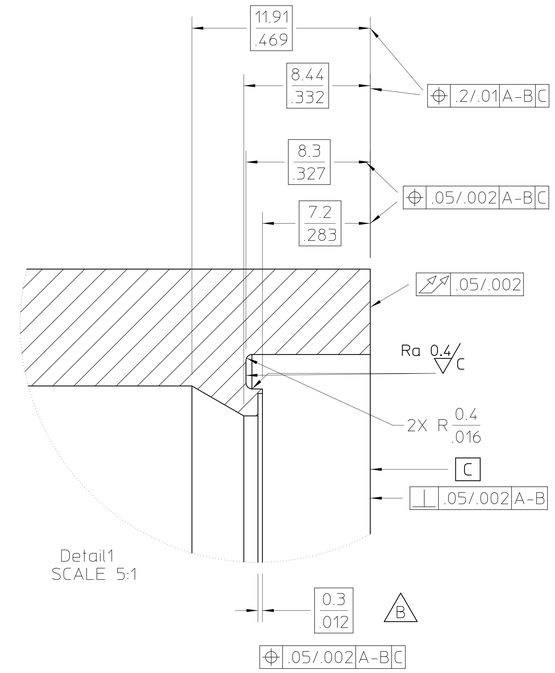


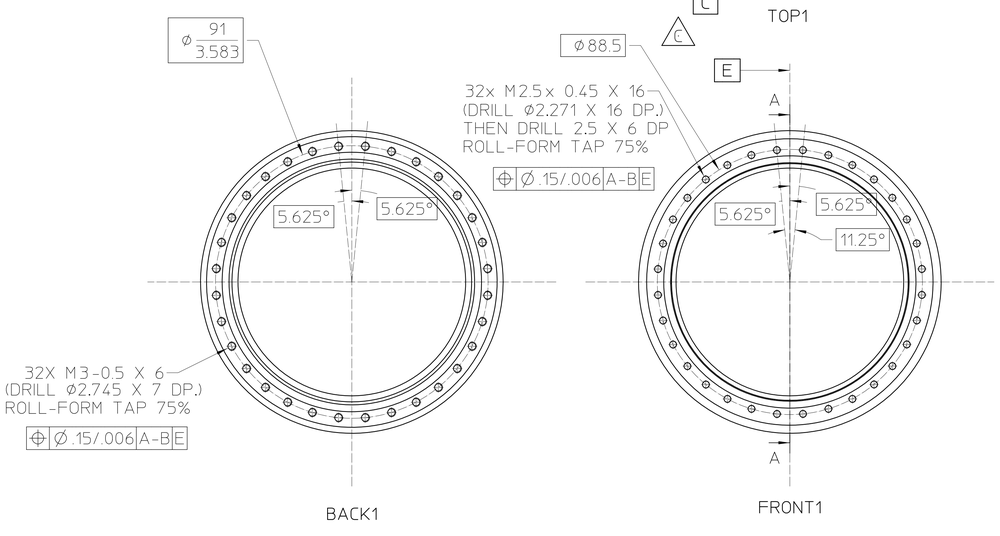


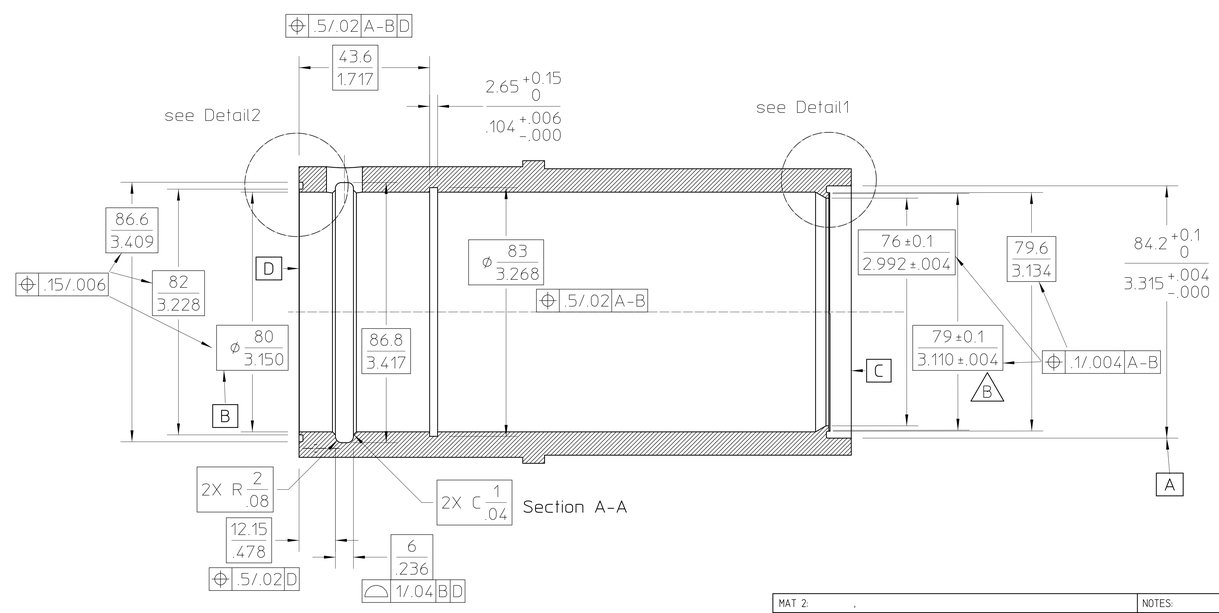


| VER | AUTHOR | APPROVER | DATE | CHANGE DESCRIPTION |
|---|---|---|---|---|
| C | dbshuman | | | INCREASED WINDOW B.C. FROM 88 MM TO 88.5MM |
| B | dbshuman | dbshuman | 9/5/12 | REDUCED WINDOW SEAT DEPTH, INCREASED ITS OD |
| A | dbshuman | dbshuman | 5/28/12 | INITIAL VERSION (NO REVISION) |

UNLESS OTHERWISE SPECIFIED
TOLERANCES
X ± .05 .XX ± .01 .XXX ± .005
FRACTIONS: ± 1/64
ANGLES: ± 0.2°
MACH. SURFS.: 125 ✓ OR BETTER
REF: ASME Y14.5M-1994, THREADS ARE CLASS 2
BREAK EDGES .016 MAX. ON MACHINED WORK
REMOVE BURRS, WELD SPLATTER & LOOSE SCALE

MAT 2: . NOTES:
MAT 1: , COPPER, OFE, PIPE, 4IN. OD X 0.625 IN. WALL THK. NOTES:

PROJECT NAME:
PROJECT NUMBER:

DO NOT SCALE PRINT
SCALE: 1 : 1
CATEGORY CODE: RP3111
THIRD ANGLE PROJECTION

ERNEST ORLANDO LAWRENCE
BERKELEY NATIONAL LABORATORY
UNIVERSITY OF CALIFORNIA

NEXT-100 XENON TIME PROJECTION CHAMBER
ENERGY PLANE - PMT ENCLOSURES
PMT ENCLOSURE

SHEET 1 OF 1 | SIZE: D | DWG NO: 26K602 | VER C