Revision	Description	Date	Approved
0	Se lanza el plano		

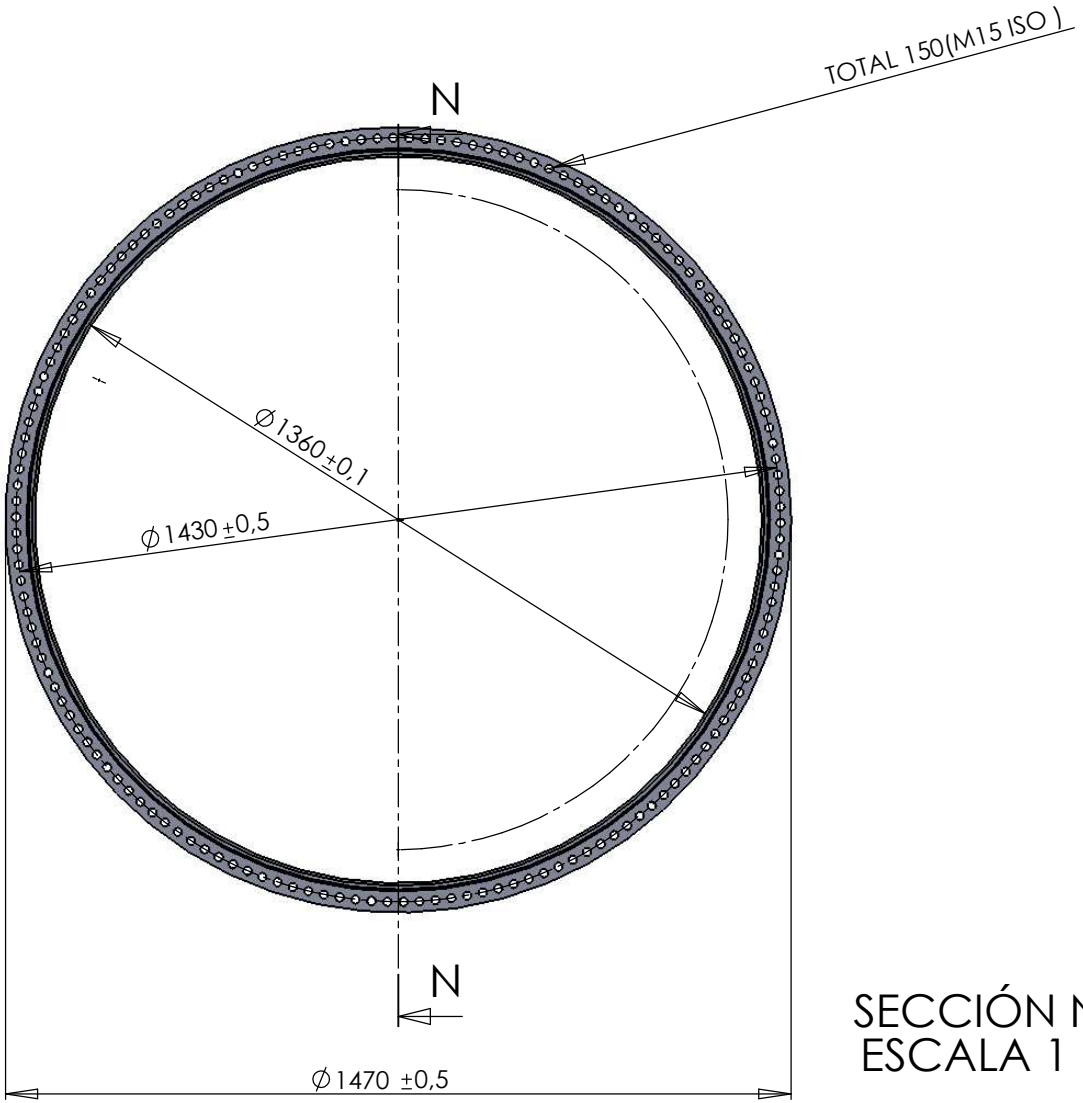

SECCIÓN N-N
ESCALA 1 : 10

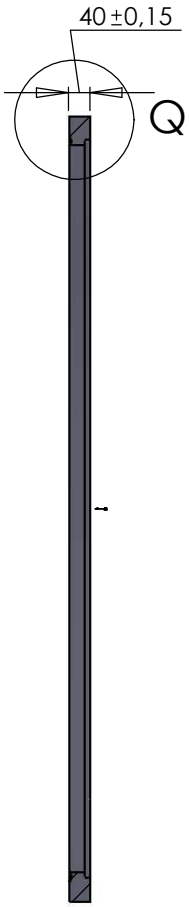

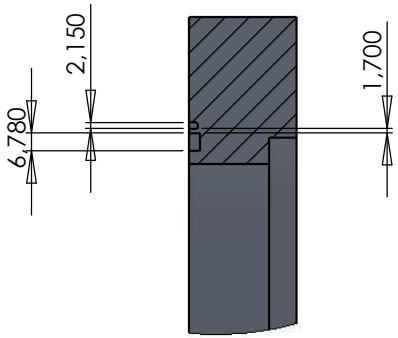

DETALLE Q
ESCALA 1 : 2

Jacket Material	HELIUM SEALING							BUBBLE SEALING				
	Cross Section	e_2	e_c	Y_2 N/mm	Y_1 N/mm	Pu20ºC MPa	PuΘ200ºC MPa	Y_2 N/mm	Y_1 N/mm	Pu20ºC MPa	PuΘ200ºC MPa	Max Temp ºC
Aluminum	1.60	0.60	0.70	150	20	50	n/a	90	20	35	n/a	150
	1.90	0.70	0.85	160	20	52	n/a	100	20	40	n/a	150
	2.20	0.70	0.90	165	20	53	n/a	105	20	40	n/a	180
	2.50	0.70	0.90	175	20	55	5	115	20	42	5	220
	3.00	0.80	1.00	185	25	55	10	130	20	45	10	250
	3.50	0.80	1.00	190	25	55	14	140	20	47	14	250
	4.00	0.90	1.10	200	25	60	17	150	20	50	17	280
	4.50	0.90	1.20	210	25	60	20	160	20	52	20	280
	5.00	0.90	1.40	220	30	63	22	170	25	55	22	300
	5.50	0.90	1.60	230	30	65	24	180	25	57	24	320
	6.00	1.00	1.80	245	35	67	25	195	30	60	25	340
	7.00	1.00	2.20	270	40	70	28	205	35	65	28	340
	8.00	1.00	2.60	290	50	72	32	225	40	68	31	360

NEXT100	UNITS: mm			
PROYECT	NORM	MATERIAL	PROCESSING/FINISH	WEIGHT
DRAWN	CHECKED	APPROVED		SCALE 1:10
TOLERANCIAS GENERALES: Según UNE EN-22768-2	INSTITUTO DE FÍSICA CORPUSCULAR LAWRENCE BERKELEY NATIONAL LABORATORY	TITTLE Next100_FlangeCylinder		DATE 25/11/2011
		DWG NO. DRWP0007	EDITION	FORMAT A3	SHEET SHEET 7 OF 7

Licencia educacional de SolidWorks
Sólo para uso académico