NOTES:

1. MATERIAL TO BE COPPER, PURE OFE (C10100 OR PURER), ANY HARDNESS CONDITION
2. PRELIMINARY DRAWING FOR PURPOSE OF ASSESSING FEASIBILITY
3. MFR SHOULD PROVIDE INDICATION OF CROSS SECTION ACCURACY AND LENGTH STRAIGHTNESS, (INDICATE OPTIONS IF AVAILABLE)

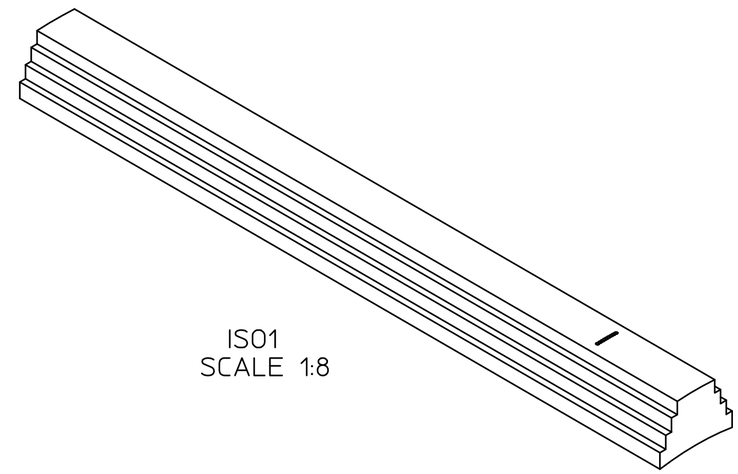

ISO1
SCALE 1:8

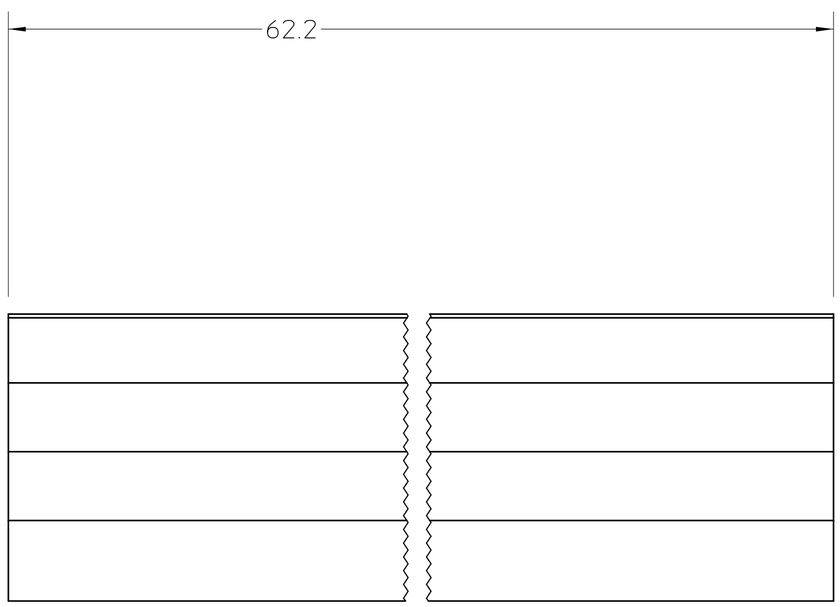

FRONT1

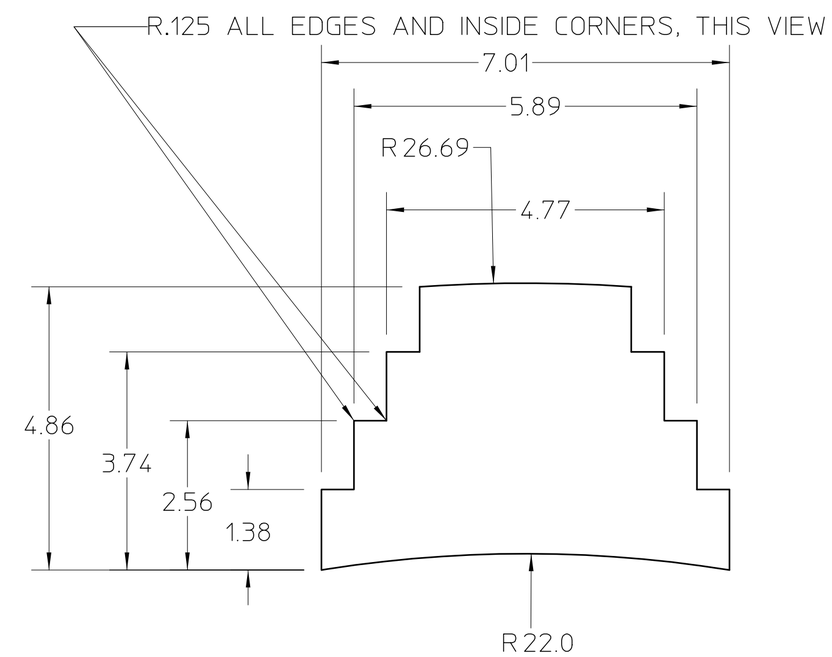

REQD	ITEM	PART NO.	DESCRIPTION

REV	AUTHOR	APPROVER	DATE	CHANGE DESCRIPTION
A	???	???	???	INITIAL REVISION

UNLESS OTHERWISE SPECIFIED

TOLERANCES: .X± .- .XX± .-- .XXX± .---
FRACTIONS: ± -/--
ANGLES: ± -.-°/INCH
MACH. SURFS.: 125✓ OR BETTER

REF:ASME Y14.5M-1994, THREADS ARE CLASS 2
BREAK EDGES .016 MAX. ON MACHINED WORK
REMOVE BURRS, WELD SPLATTER & LOOSE SCALE

PROJECT NAME: GENERAL
PROJECT NUMBER: NONE

DO NOT SCALE PRINT
SCALE: 1 : 2
CATEGORY CODE: XX0000

THIRD ANGLE PROJECTION

ERNEST ORLANDO LAWRENCE
BERKELEY NATIONAL LABORATORY
UNIVERSITY OF CALIFORNIA

NEXT-100 DETECTOR
INNER COPPER SHIELD
COPPER SHIELDING BAR

SHEET 1 OF 1 | SIZE: C | DWG NO: XXXXX | REV A