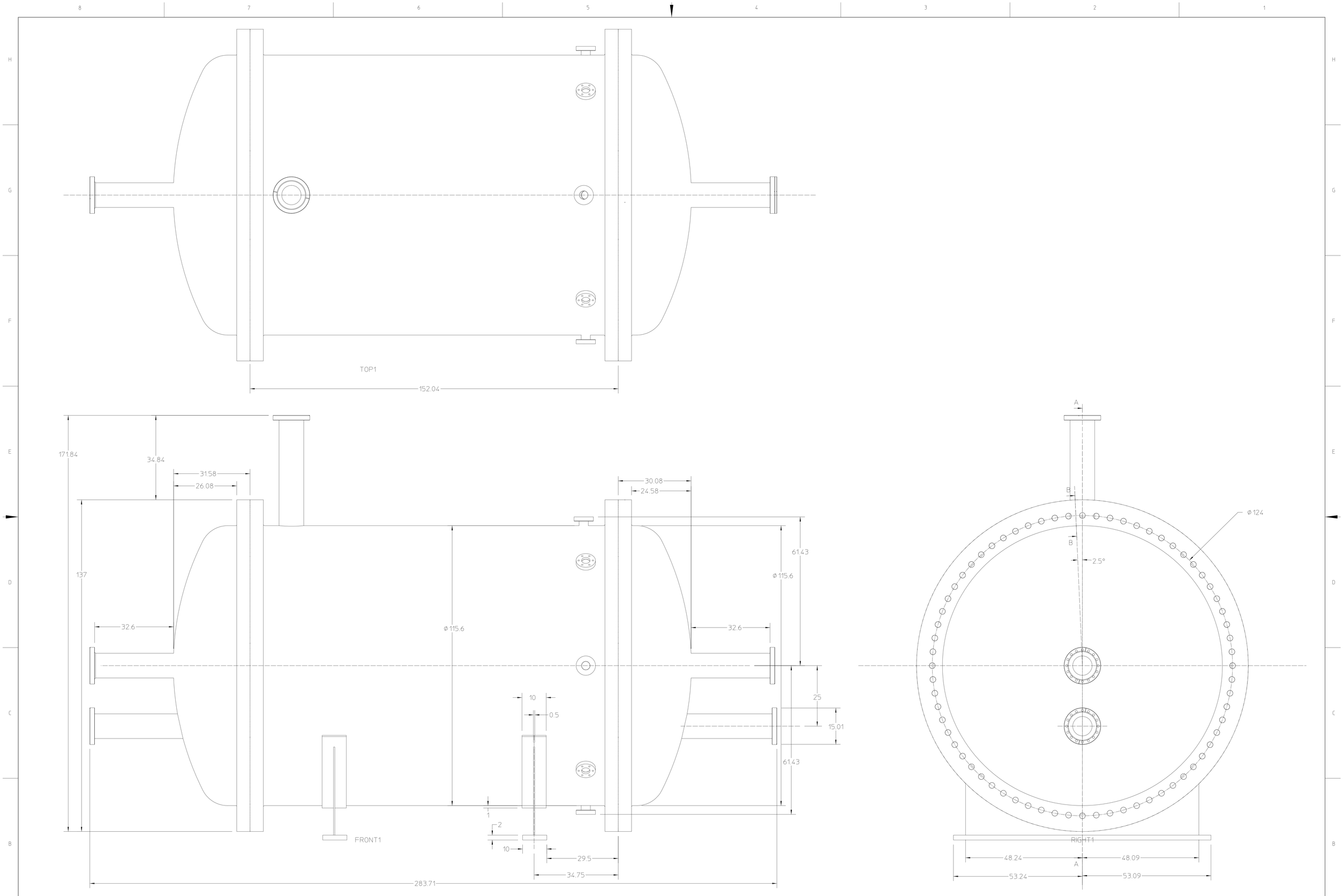

REV	AUTHOR	APPROVER	DATE	CHANGE DESCRIPTION
A	???	???	???	INITIAL REVISION

UNLESS OTHERWISE SPECIFIED
TOLERANCES: .X± .- .XX± .-- .XXX± .---
FRACTIONS: ± -/--
ANGLES: ± -.-°/INCH
MACH. SURFS.: 125√ OR BETTER
REF: ASME Y14.5M-1994, THREADS ARE CLASS 2
BREAK EDGES .016 MAX. ON MACHINED WORK
REMOVE BURRS, WELD SPLATTER & LOOSE SCALE

REQD	ITEM	PART NO.	DESCRIPTION

PROJECT NAME: GENERAL
PROJECT NUMBER: NONE
DO NOT SCALE PRINT
SCALE: 1:5
CATEGORY CODE: XX0000
THIRD ANGLE PROJECTION

ERNEST ORLANDO LAWRENCE
BERKELEY NATIONAL LABORATORY
UNIVERSITY OF CALIFORNIA

TITLE1 STRING
TITLE2 STRING
TITLE3 STRING

SHEET 1 OF 4 | SIZE A | DWG NO. | REV A

1 4pr Essure_vessel1