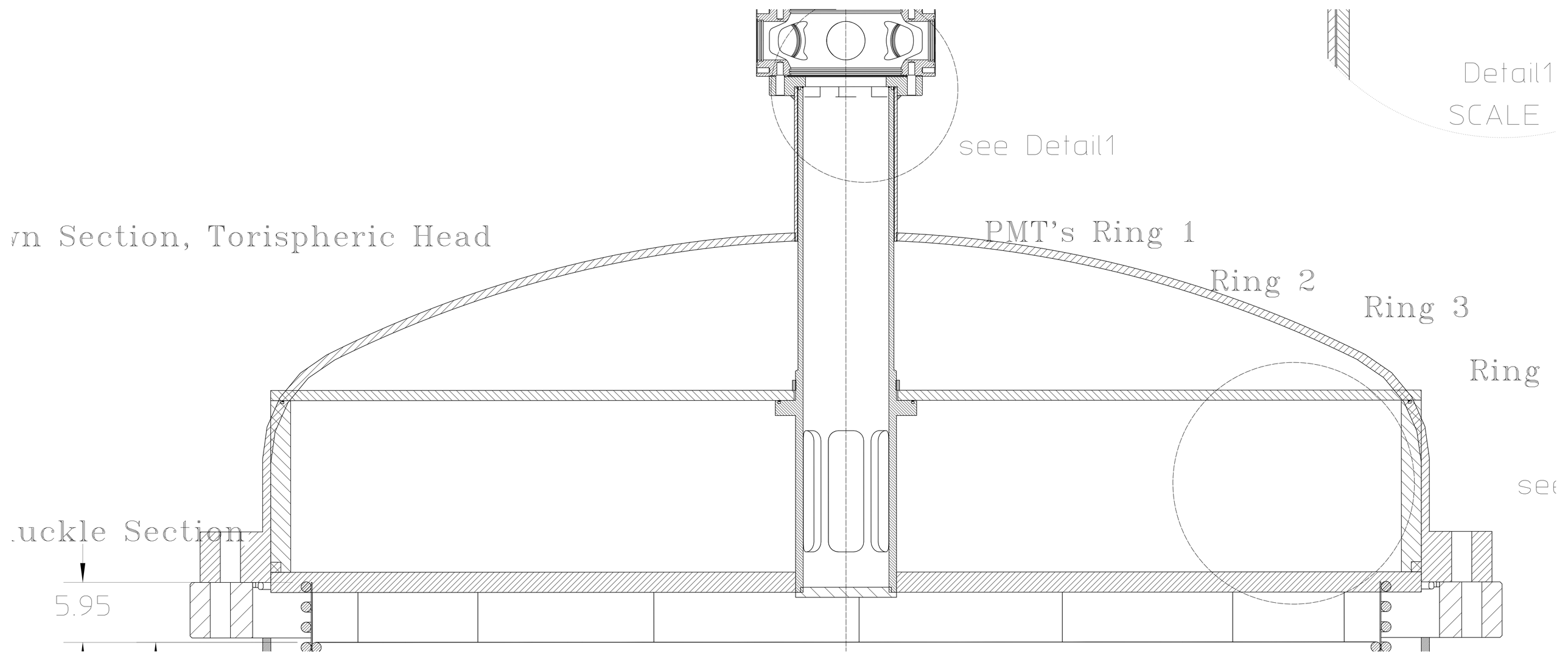
Detail1
SCALE
see Detail1
vn Section, Torispheric Head
PMT's Ring 1
Ring 2
Ring 3
Ring
see
uckle Section
5.95