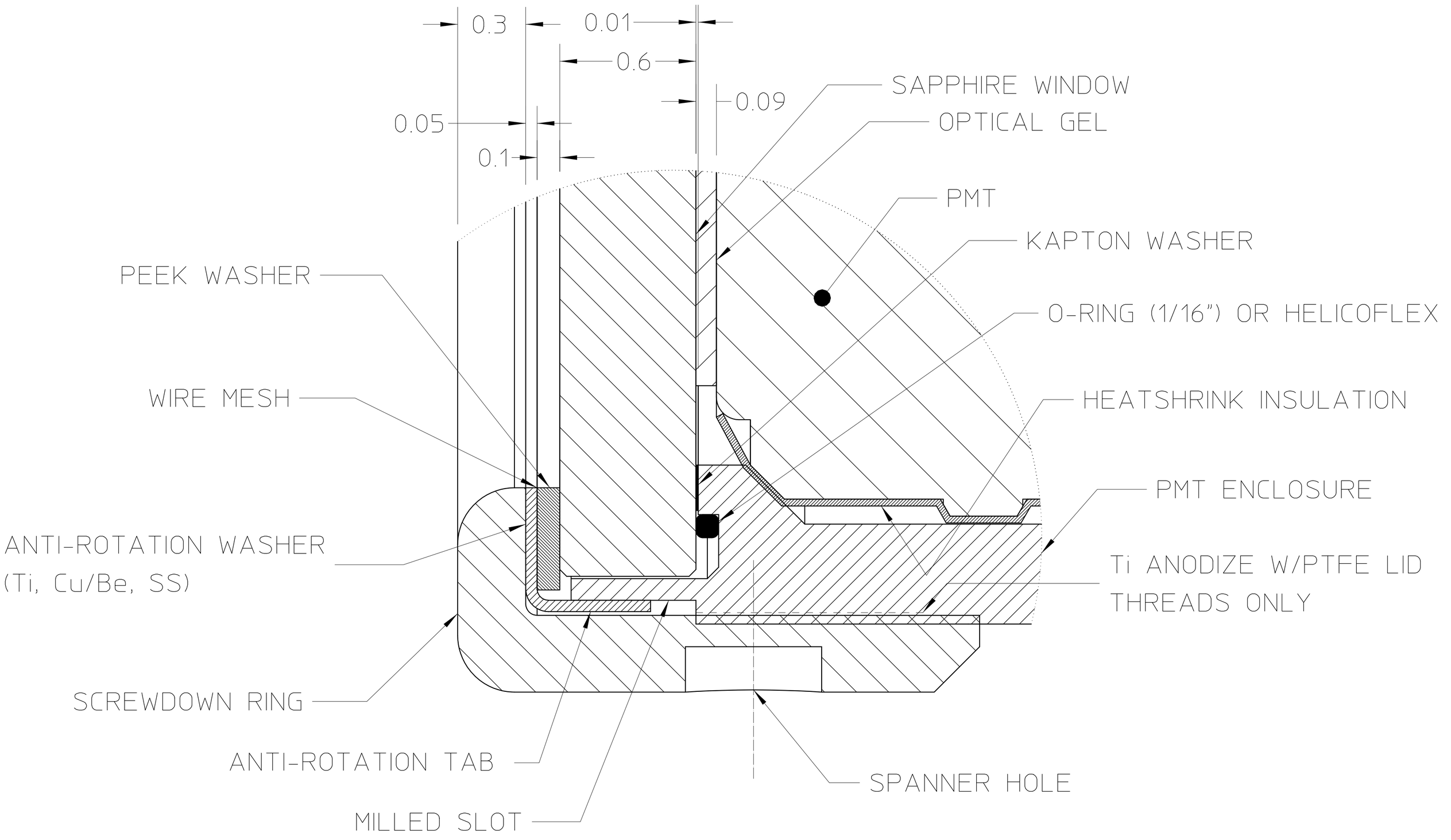

Detail1

SCALE 5:1 DIMS IN CM