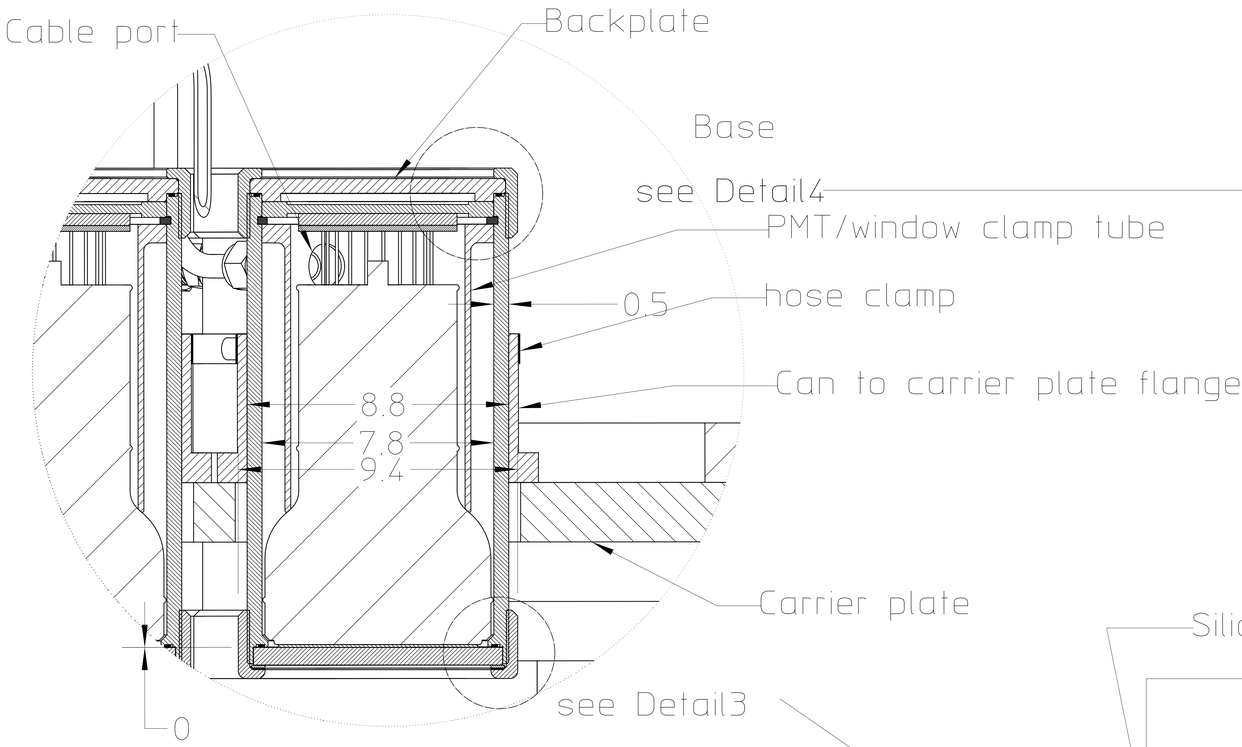

Detail2
SCALE 1:2

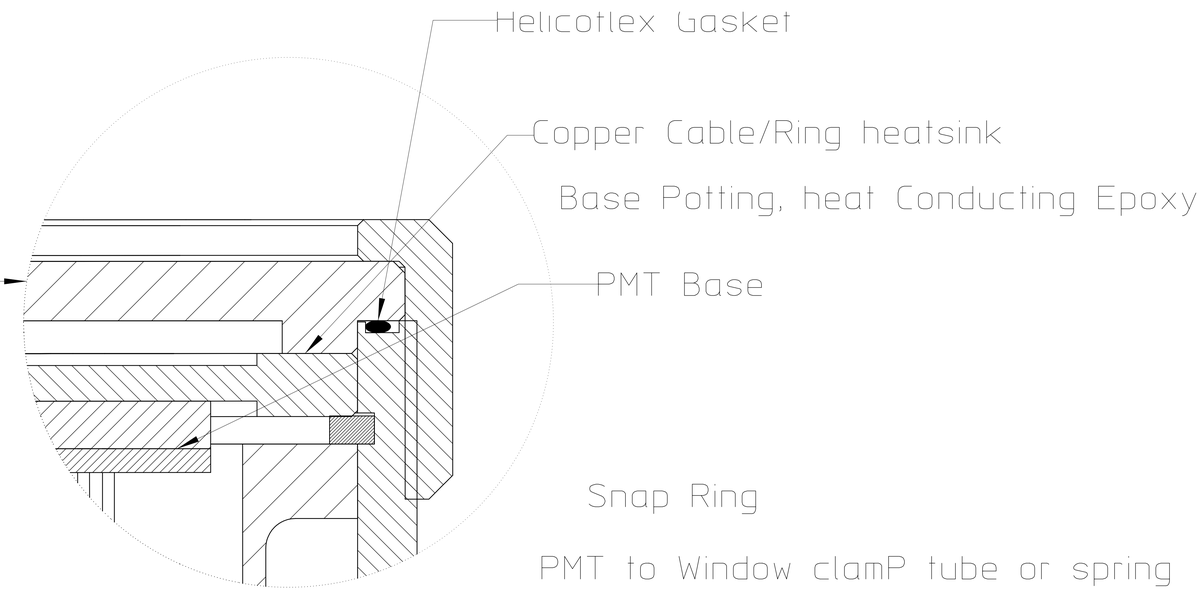

Detail4
SCALE 2:1

athode

Annulus
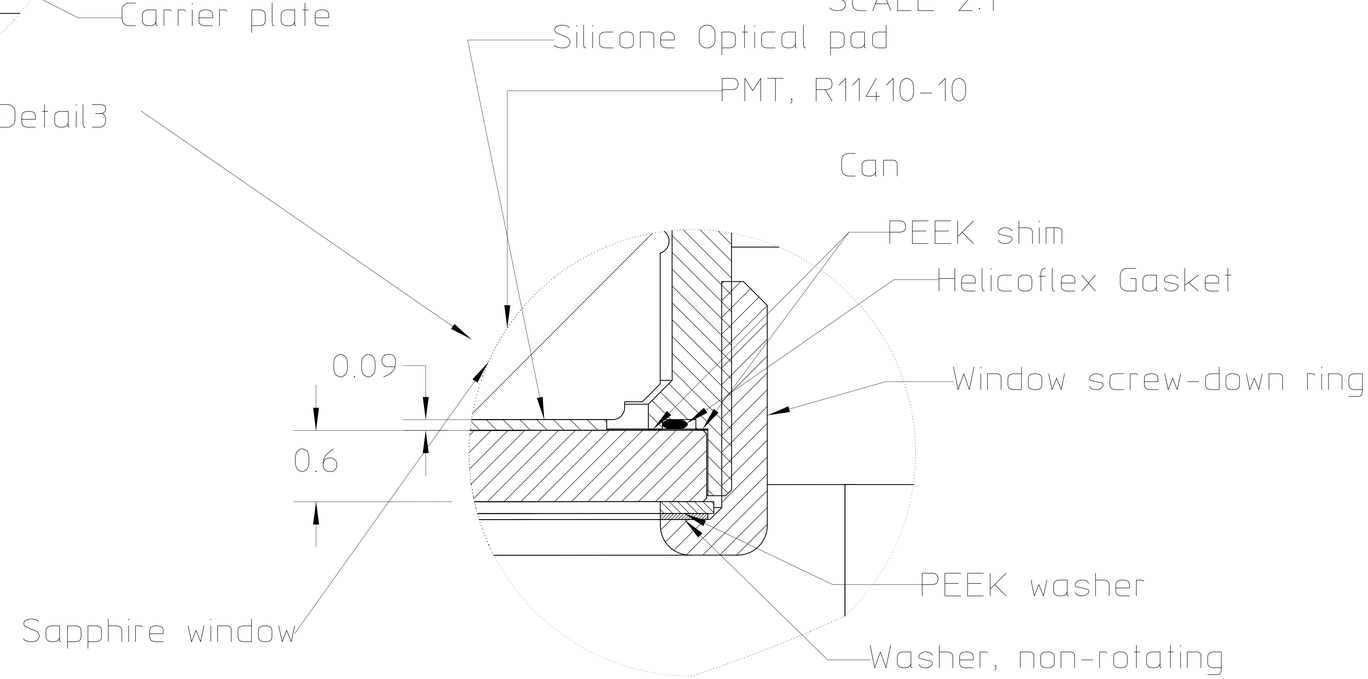
Mesh Plane