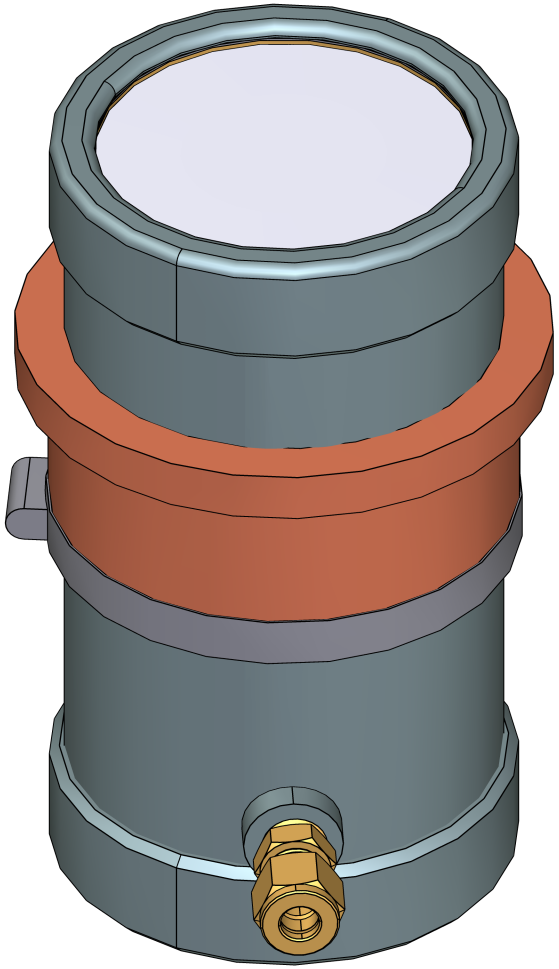

Created With QuadriSpace SHARE3D PDF Trial Software