AXIAL AND RADIAL FLUX GENERATORS IN SMALL-SCALE WIND POWER PRODUCTION

T. Rovio, H. Vihriälä, L. Söderlund, J. Kriikka
Institute of Electromagnetics, Tampere University of Technology
P.O. Box 692, FIN-33101 Tampere, Finland
Tel. +358-3-365 2771, Fax. +358-3-365 2160
E-mail: {teemu.rovio, harri.vihriala, lasse.soderlund, jarmo.kriikka}@tut.fi
M. Hyppönen
Form Center Oy, Jorvas Hitech Center, FIN-02420 Jorvas
Tel. +358-9-296 3873, Fax. +358-9-296 3874
E-mail: matti.hypponen@formcen.pp.fi

ABSTRACT: This paper explores the requirements imposed on the generator of a direct-driven, stall-regulated, and independent small-scale wind power plant. Two prototype generators have been designed, constructed, and tested.
Keywords: Small Wind Plant, Direct Drive, Generators, Variable-Speed Operation

1 INTRODUCTION

Certain installations require a small maintenance-free power supply independent of the grid. Such demands are common in e.g. weather monitoring beacons, measurement stations, and private consumer use. A subkilowatt wind power plant is a vital alternative for such usage.

2 DESIGN PERSPECTIVE

2.1 Stall Regulation

An economically feasible independent small-scale wind power plant must have a very rugged construction, which requires stall control [5]. The generator of a stall-regulated wind power plant must have a very high torque rating to sustain control. In addition, high overload capacity is required to remove the need of a separate braking element.

2.2 Wind Speed of Operation

Small wind power plants are usually situated in worse wind conditions than large power plants. Even though the power content of wind is cubically proportional to wind speed, the rareness of high wind speed skews the distribution of available energy towards moderate wind speed, as can be seen in figure **1**. Therefore, a high-quality generator should have maximal efficiency at subnominal power.

For very small plants, utilising the energy of wind gusts is important. To facilitate easy and fast startup of the plant's turbine, the generator must have very low cogging torque.

2.3 Independency, Permanent Magnets and Cooling

Because there are no external power sources available, the generator must be magnetized with permanent magnets. Neodymium-Iron-Boron magnets were chosen to acquire high force density. However, this type of magnet is relatively sensitive to heat and demagnetizes above certain temperature, which depends on the grade of the magnet material. Therefore, the generator must have sufficient cooling to prevent demagnetization–without fanning.

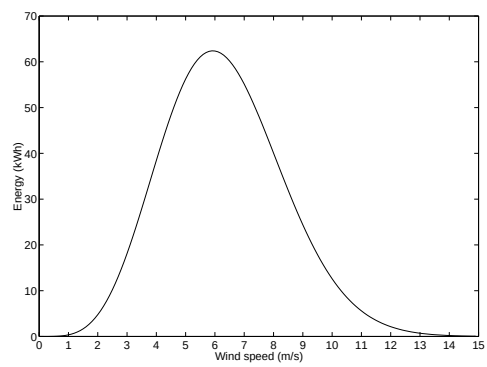

Figure 1: Distribution of energy over wind speed

2.4 Manufacture Cost and Mass

Of course, the price and the mass of the generator are always important. In very small generators, the material costs are offset by labor costs. The making of armature winding is the most time-consuming and expensive phase of the manufacturing process. Therefore, the use of relatively expensive materials is permissible to reduce assembly costs.

In order to facilitate setup at remote locations, the generator should be light enough to be managed by a single person.

2.5 Air Gap Windings

The requirements—especially high torque-to-mass ratio and swift manufacture—are not easily fulfilled by conventional electric machines. Therefore, rather novel machine structures with air gap windings were chosen. Air gap windings are necessary to achieve low cogging torque, negligible phase inductance and armature reaction, and ease of construction.

2.6 Voltage

The small wind power plant is likely to be set up by private consumers with no expertise in electric systems. Therefore, the generator is required to function at a safe voltage. For our purposes, safe voltage means 50 r.m.s volts, line-to-line.

3 MACHINE STRUCTURE

3.1 Axial Flux Machine

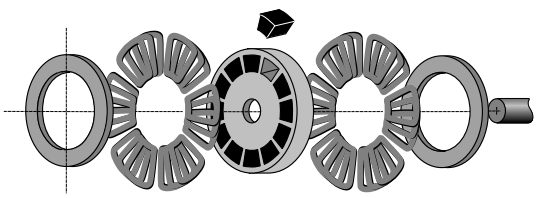

Figure 2: The structure of the axial flux machine

The double stator axial flux machine (figure **2**) has an advantageous structure[1]: The winding is a chain of racetrack coils, immersed in resin. The stator iron is a simple ring of sheet steel, and the rotor is an aluminum disc with slots for sector-shaped magnets. Direct heat conduction from armature to stator iron and casing ensures sufficient cooling.

3.2 Radial Flux Machine

The structure of the radial flux machine is in figure **3**. Because any kind of slots would raise the winding costs to an unacceptable level, a peculiar toroidal winding was used. The stator is made of two halves of SMC (a powder iron material manufactured by Höganäs AB [2]) cylinder, wrapped with racetrack coils and immersed in resin. Direct heat conduction from armature end-turn windings to casing provides excellent cooling.

4 MACHINE DESIGN

4.1 Design Parameters

To compare the different topologies, two particular machines had to be designed for a particular turbine. The properties in table **I** were required of the machines.

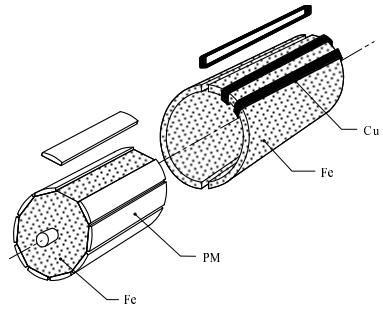

Figure 3: The structure of the radial flux machine

Table I: Nominal values

Torque	τ	5.46Nm
Rotational speed	ω	550 rpm
Phase voltage	V	$\frac{50V}{\sqrt{3}}$

4.2 Iron Circuit Models

Standard iron circuit models were used for determining machine dimensions roughly. Here, we summarize the most important design equations. These same equations give very accurate results after magnetic induction in the air gap has been corrected with FEM calculations.

The torque of the axial flux machine can be computed from the Lorentz force and is given by

$$\tau = \frac{3\ B\ N\ \xi\ IA}{\pi}, \tag{1}$$

where B is air gap induction, N is the number of coil turns, ξ is the number of poles, I is the phase current, and A is the area of the air-gap side of the stator iron. Implicit within this equation lies the most important design trade-off between magnet mass and copper losses. Also, due to the lack of space at the inner radius, the total current $3N\xi I$ is inversely proportional to the inner radius of the stator iron. This dictates the maximum torque obtainable for given winding thickness and outer diameter [4].

The voltage is given by

$$V = \frac{N\xi BA\,\omega}{\pi}, \tag{2}$$

where ω is the machine's speed of rotation, in $\frac{rad}{s}$.

For the radial flux machine, torque is given by

$$\tau = 3N\xi r_m BIL, \tag{3}$$

where r_m is the mean radius of the winding and L is the axial length of the stator iron. The voltage is given by

$$V = N\xi BLr_m\omega. \tag{4}$$

Several electrically feasible compromises between length and radius of the stator had to be rejected due to the brittleness of permanent magnets. Too elongated, thin magnets could break during assembly.

4.3 FEM models

For a more detailed design, current-driven FEM models were used. The 2D-FEM model (figure **4**) of the axial flux machine is a slice from the average radius of the stator iron.

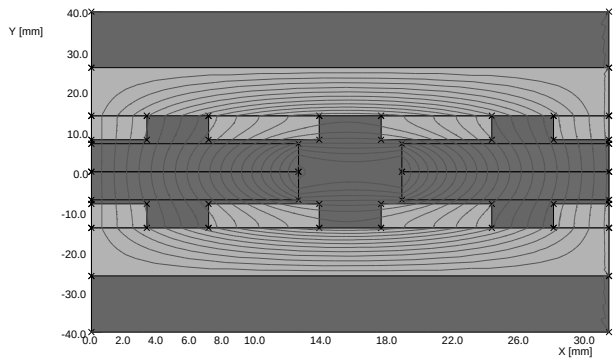

Figure 4: FEM model of the axial flux machine

The FEM model of the radial flux machine is a more traditional radial slice-through of the machine (figure **5**).

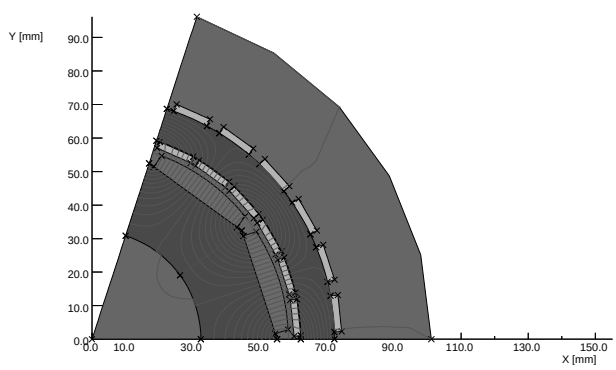

Figure 5: FEM model of the radial flux machine

Since both machines had air gap windings, Lorentz force could be used to compute torque directly. Voltage was computed by sampling the flux density at the vicinity of stator iron to gain an approximation of winding flux.

5 CONSTRUCTION

The axial flux prototype was very simple to manufacture. Stator irons could be wound manually from sheet steel. Ironless rotor was relatively easy to assemble and install, even though assembly does require a special iron desk for stabilizing magnet movements.

The assembly of the radial flux machine had certain complications. The fitting of end-turn windings was rather awkward. Very large attractive forces between stator and rotor required the rotor to be lowered into place with a mill.

6 TEST RESULTS

Both machines were tested in a test bench (figure **6**) with inverter-fed induction machine. Mechanical torque, rotational speed, and electric output were measured. The results are shown in tables **II** and **III**.

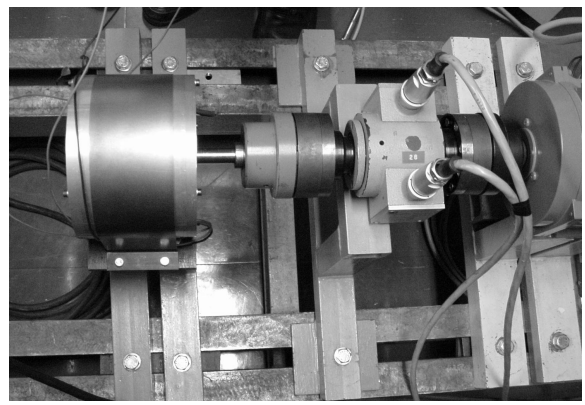

Figure 6: Test bench

Table II: Measured properties of the axial flux machine

Torque	τ	5.46 Nm
Mass	m	8.1 kg
Outer diameter	D_{out}	200 mm
Phase voltage	V	27.4 V
Efficiency	η	73 %
Thermal gradient	ΔT	7.6 K
Power at 10 m/s	P_{out}	230 W

The thermal gradient is the temperature difference between armature winding and the outer surface of casing. Both machines had sufficient cooling even in a laboratory

Table III: Measured properties of the radial flux machine

Torque	τ	5.46 Nm
Mass	m	13.1 kg
Outer diameter	D_{out}	200 mm
Phase voltage	V	29.9 V
Efficiency	η	79 %
Thermal gradient	ΔT	4.5 K
Power at 10 m/s	P_{out}	240 W

environment without wind and excellent overload capability. As seen in figures **7** and **8**, maximal efficiency is reached at very low wind speeds, especially by the axial flux machine, and is retained over the most important 4 to 8 m/s region.

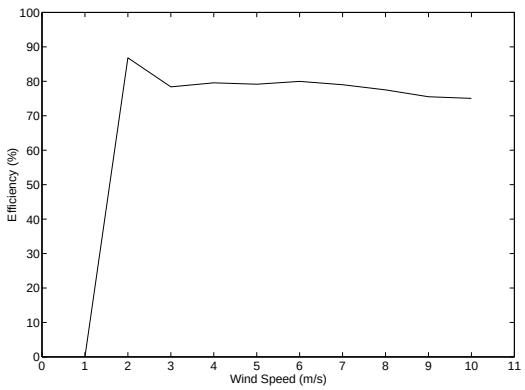

Figure 7: Efficiency of the axial flux machine

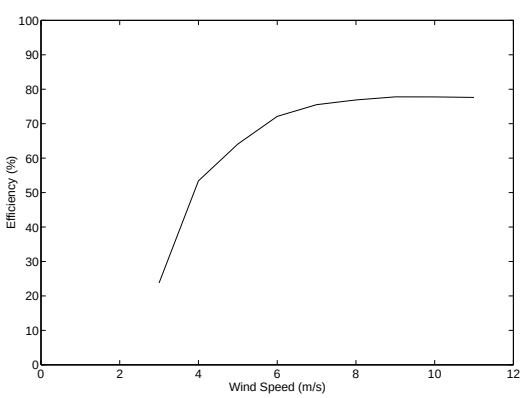

Figure 8: Efficiency of the radial flux machine

7 CONCLUSION

The design methods devised for these generators have been fast and accurate. Further prototypes could be built using the same principles.

The radial flux machine proved rather unsuitable for small-radius, high-torque application. Its parts–toroidal winding, for example–were relatively complicated, resulting in an awkward assembly process. The SMC used for iron parts is not the proper material choice for conventional electric machine. It has too high loss density and the maximal allowed compression ratio (1:4) may force the designer to opt for distasteful dimensions. However, SMC is likely to be the superior material for transversal flux machines.

The axial flux generator has a very simple and robust structure. Its electrothermal properties are excellent, and economic feasibility may be achievable. In the future, a lighter prototype will be built for extensive field testing.

REFERENCES

[1] Mikael Alatalo. Permanent magnet machines with air gap windings and integrated teeth windings. Technical Report 288, Chalmers University of Technology, Göteborg, Sweden, 1996.

[2] Höganäs AB, see http://www.hoganas.com/

[3] Teemu Rovio. Pientuulivoimalan generaattorin suunnittelu. Master's Thesis, Tampere University of Technology, Finland, 2000. *(in Finnish)*

[4] E. Spooner and B.J. Chalmers. "TORUS": A slotless, toroidal-stator, permanent-magnet generator. In *IEE Proceedings-B*, volume 139, pages 497–506, 1992.

[5] Harri Vihriälä. Control of variable speed wind turbine. Licentiate thesis, Tampere University of Technology, 1998.