ITEM	PART NO	REQD	DESCRIPTION	MATERIAL
5	251911	1	RELIEF VALVE WELDMENT	-
4	-	1	LARGE FLANGE TEE MDC-824038	-
3	-	12	DOUBLE CLAW CLAMP MDC-802000	-
2	-	3	CENTERING RING, MDC-810001	-
1	-	1	4" CLAW CLAMP BLANK MDC-812001	SS 304L

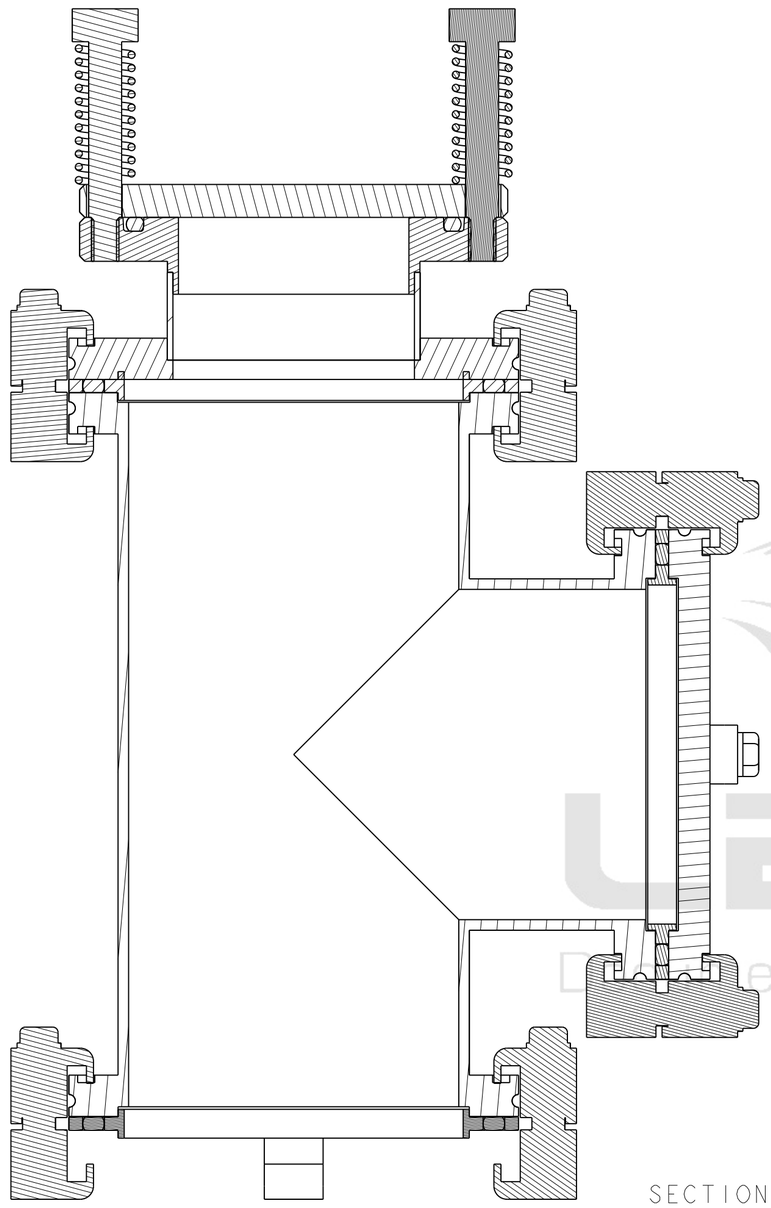

SECTION A - A

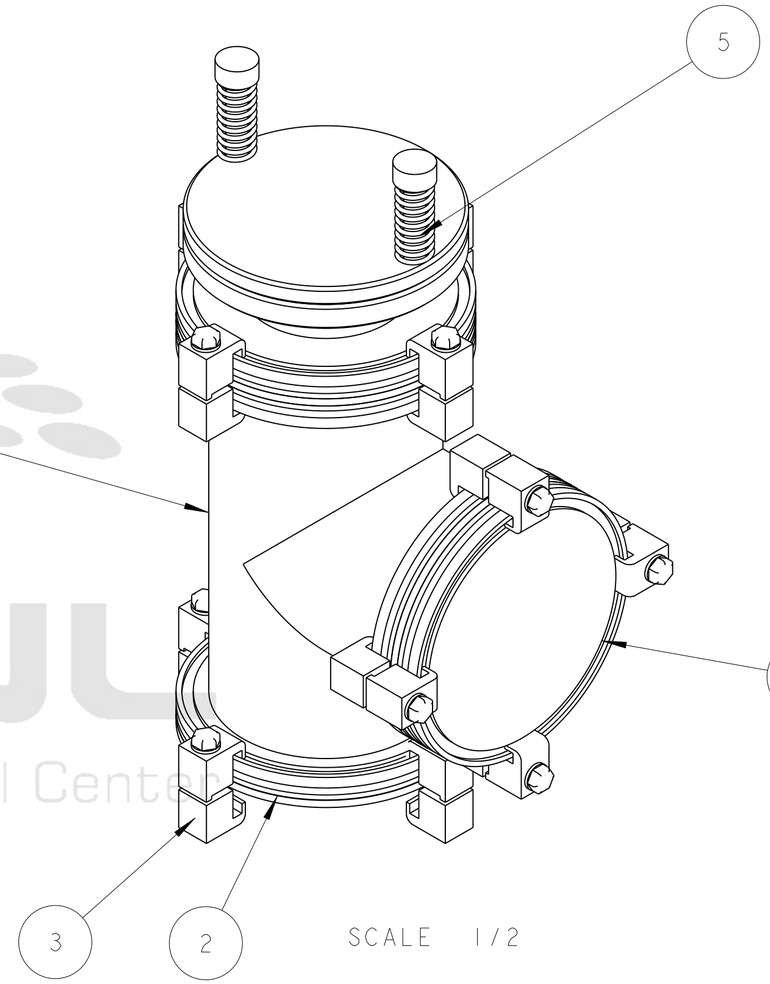

SCALE 1/2

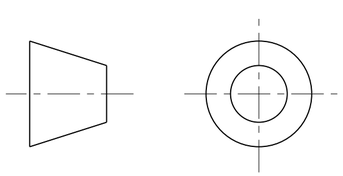

THIRD ANGLE PROJECTION

REV	DWG	CHK	ZONE	DATE	CHANGES
A	ARH	DPO		09-14-02	INITIAL RELEASE

UNLESS OTHERWISE SPECIFIED

TOLERANCES		
	X.X ± 0.1	FRAC. ± 1/64
	X.XX ± 0.03	Angles ± 1.00°
	X.XXX ± 0.010	FINISH 125 √ (µin)

DO NOT SCALE PRINT

THREADS ARE CLASS 2
CHAMFER ENDS OF ALL SCREW TREADS 30°
CUT ROUND, 1.5 THREAD RELIEF ON MACHINED THREADS
BREAK EDGES .016 MAX. ON MACHINED WORK
REMOVE BURRS, WELD SPLATTER & LOOSE SCALE
IN ACCORDANCE WITH ASME Y14.5M & B46.1

SHOP ORDERS

SER NO.	-		
ACCT NO.		NO. REQD	DATE ISSD -
DEL TO			DATE REQD -
SURFACE TREATMT	-		
IDENT METHOD	TAG		
PROJECT NUMBER	N/A		N/A (logo)
PROJECT NAME	N/A		
DWG BY	KNOLLS		DATE 28-Jan-02
CHK BY	Jon Zbasnik		DATE 04-Feb-02
APR BY	Jon Zbasnik		DATE 04-Feb-02

ERNEST ORLANDO LAWRENCE
BERKELEY NATIONAL LABORATORY
UNIVERSITY OF CALIFORNIA - BERKELEY

LHC IR FEEDBOX
MAJOR ASSEMBLY
ROUGHING PORT ASSEMBLY

MICROFILMED:	DWG. TYPE	SHOWN ON	SCALE: 3/4	DO NOT SCALE PRINTS
	ASSEM	.	SHEET 1 OF 1	
PATENT CLEAR:	DESIGN ACCT. NO.	CATEGORY CODE	DWG. NO.	SIZE / REV.
	Z5LCE2	LH2001	2519103	A

Dwg. File: 251910 Model File: 251910

DWG. NO. 2519103 SIZE A REV. SH. 1

LBNL Document Control Center

Officially Released to the LBNL Document Control Center
Released: October 1st, 2002 DCC Auth Key: 0TZSU68F35

Downloaded by: Sukhon Panomchan at January 26, 2005 10:21:00