ITEM	QTY	DESCRIPTION	MAT'L

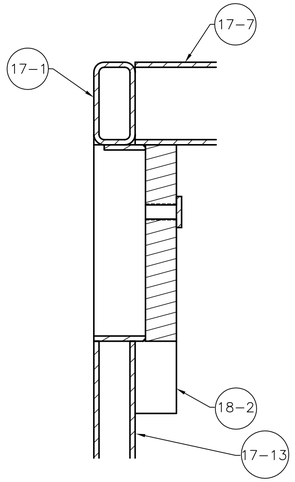

SECTION A–A
4X

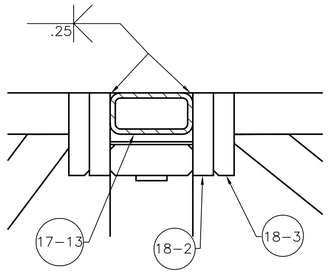

SECTION B–B
4X

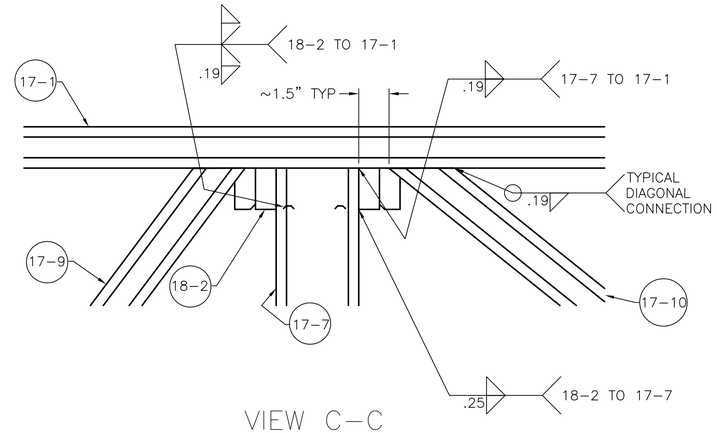

VIEW C–C
4X

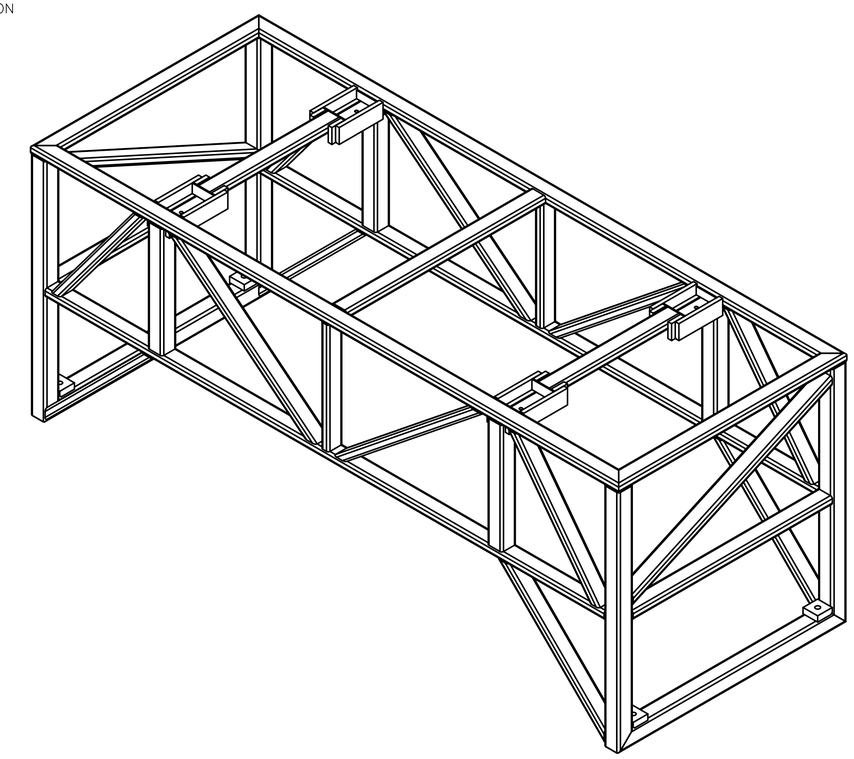

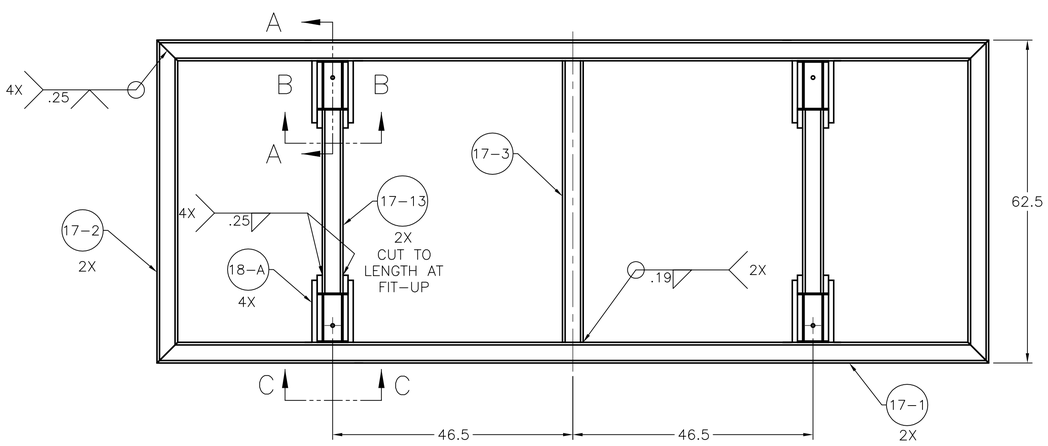

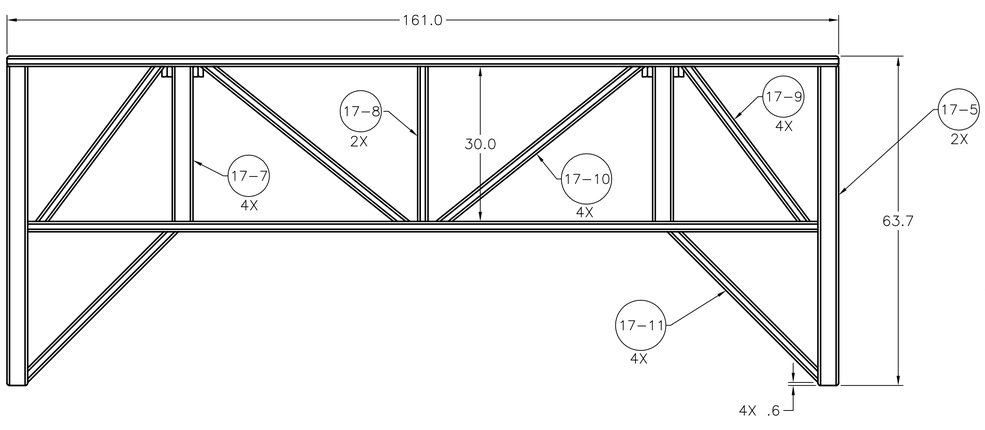

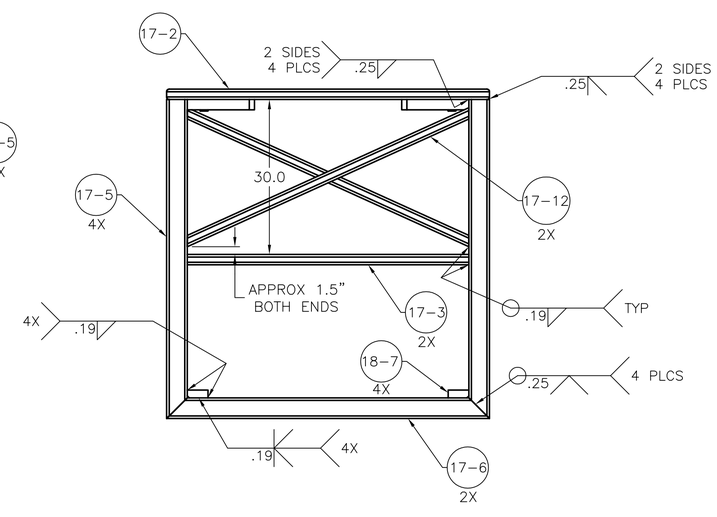

QTY=4

REV.	DESCRIPTION	BY	CHK'D
UNLESS NOTED OTHERWISE DIMENSIONS IN INCHES	MTM Meyer Tool & Mfg., Inc.		
TOLERANCES			
FRACT. ± 1/16 .X ± .03 .XX ± .01 .XXX ± .005 ANGLE ± 1Deg	BY: CME 9/18/03	CHK'D:	
	00918-0065 SHIPPING FRAME UPPER FRAME WELDMENT		

THIS DRAWING AND DESIGN IS THE PROPERTY OF MEYER TOOL AND MFG. CO. UNAUTHORIZED USE OR REPRODUCTION IS STRICTLY PROHIBITED.

SCALE	CUSTOMER	JOB NO.	DWG.	SIZE: D
1:15	LBNL	00918-0065	SF16	REV. 0