ITEM	QTY	DESCRIPTION	MAT'L
1	12	WIRE ROPE VIBRATION ISOLATOR IDC # M20-390-08-A	ALUM/STEEL
2	12	1" x 6" FLAT BAR x 10.5" LG	A36
3	12	1" x 3.5" FLAT BAR x 13" LG	A36
4	96	3/8"-16UNC 1.5LG SOCKET HD CAP SCREW	CS/ZINC

NOTES:
1. QUANTITIES ARE FOR 1 FRAME, 4 FRAMES RQD. (12 ASSEMBLIES PER FRAME)

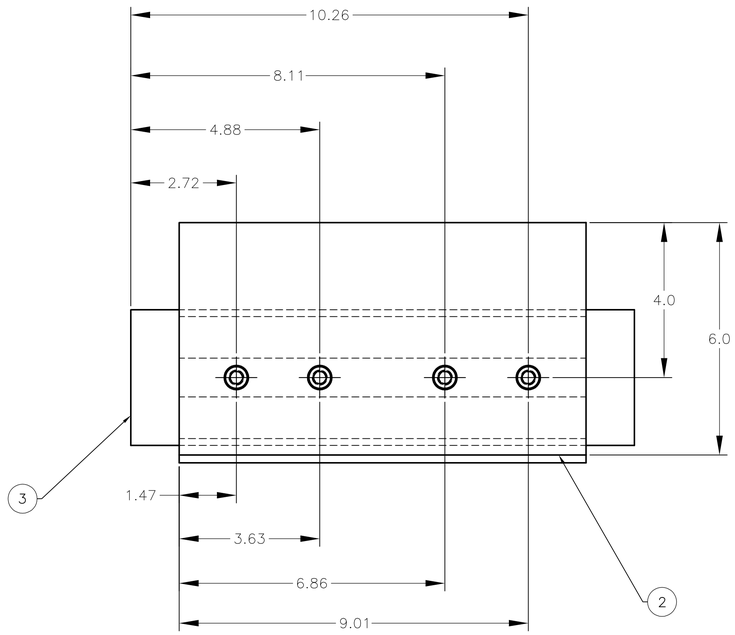

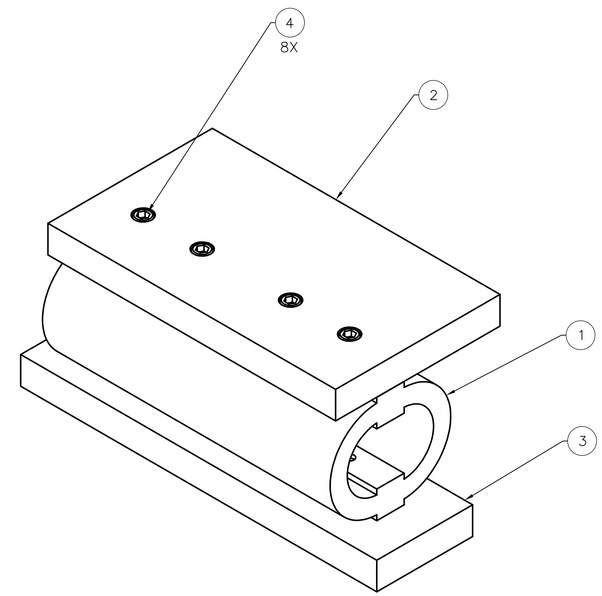

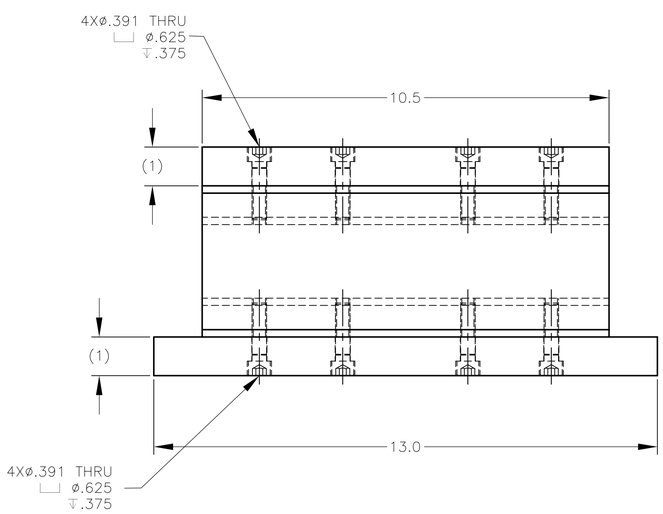

ASSY A

12 PER FRAME

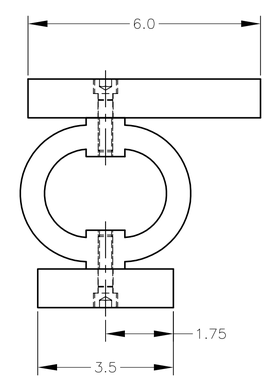

QTY = 48 TOTAL

REV.	DESCRIPTION	BY	CHK'D

UNLESS NOTED OTHERWISE DIMENSIONS IN INCHES
TOLERANCES
FRACT. ± 1/16
.X ± .03
.XX ± .01
.XXX ± .005
ANGLES ± 1Deg

MTM
Meyer Tool & Mfg., Inc.

BY: CME 08/07/03 CHK'D:

00918-0065 SHIPPING FRAME
SADDLE VIBRATION ISOLATOR ASSY

SCALE 1:2 | CUSTOMER LBNL | JOB NO. 00918-0065 | DWG. SF14 | SIZE: D | REV. 0

THIS DRAWING AND DESIGN IS THE PROPERTY OF MEYER TOOL AND MFG. CO. UNAUTHORIZED USE OR REPRODUCTION IS STRICTLY PROHIBITED.