ITEM	QTY	DESCRIPTION	MAT'L

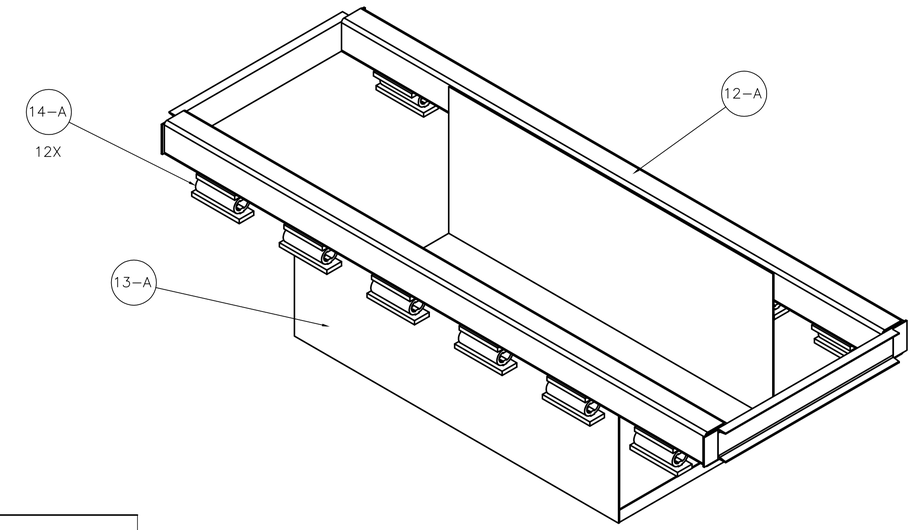

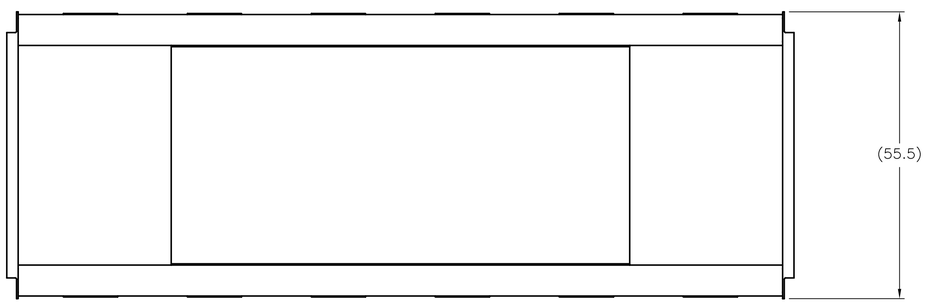

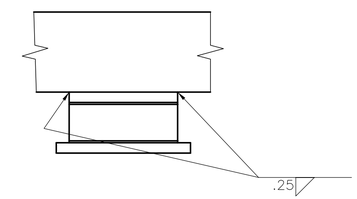

DETAIL A
SCALE 1:7.5
12X

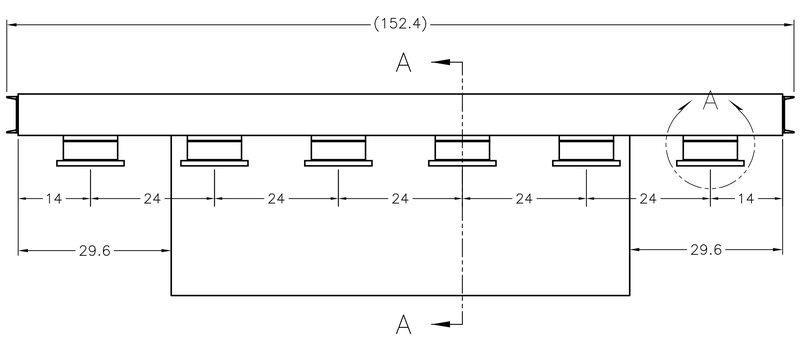

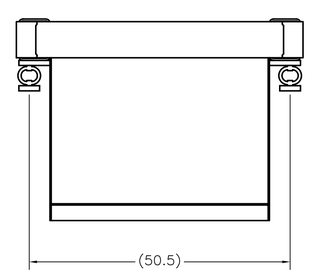

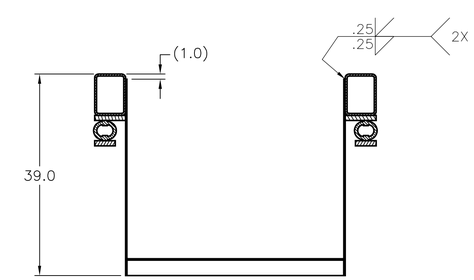

SECTION A–A

QTY = 4

REV.	DESCRIPTION	BY	CHK'D

UNLESS NOTED OTHERWISE DIMENSIONS IN INCHES

TOLERANCES

FRACT. ± 1/16
.X ± .03
.XX ± .01
.XXX ± .005
ANGLES ± 1Deg

MTM
Meyer Tool & Mfg., Inc.

BY: CME 9/18/03 | CHK'D:

00918–0065 SHIPPING FRAME
SADDLE WELDMENT

THIS DRAWING AND DESIGN IS THE PROPERTY OF MEYER TOOL AND MFG. CO. UNAUTHORIZED USE OR REPRODUCTION IS STRICTLY PROHIBITED.

SCALE	CUSTOMER	JOB NO.	DWG.	SIZE: D
1:15	LBNL	00918–0065	SF11	REV. 0