ITEM	QTY	DESCRIPTION	MAT'L
7	4	1 1/2" x 3.5" x 3.5" FLAT BAR	A36
8	4	1/4" x 4" x 4" FLAT BAR	A36
9	2	2 1/2" x 4" x 8" FLAT BAR	A36
10	2	2 1/2" x 4" x 8" FLAT BAR	A36
11	6	2 1/2" x 4" x 4" FLAT BAR	A36
12	4	1/4" PLATE x 1.5" x 1.5"	A36

NOTES:
1. QUANTITIES ARE FOR 1 FRAME, 4 FRAMES RQD.

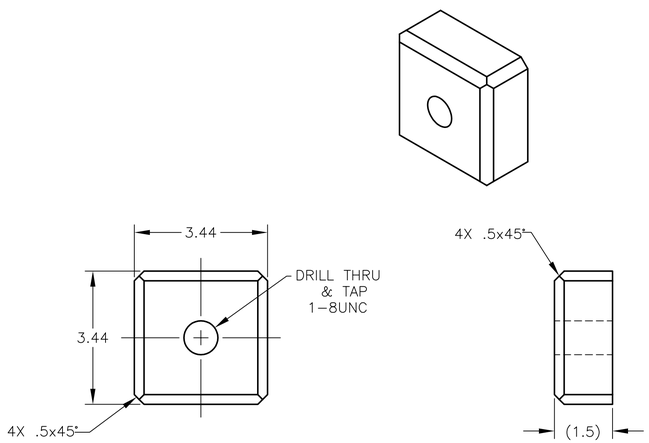

ITEM 7

QTY 4

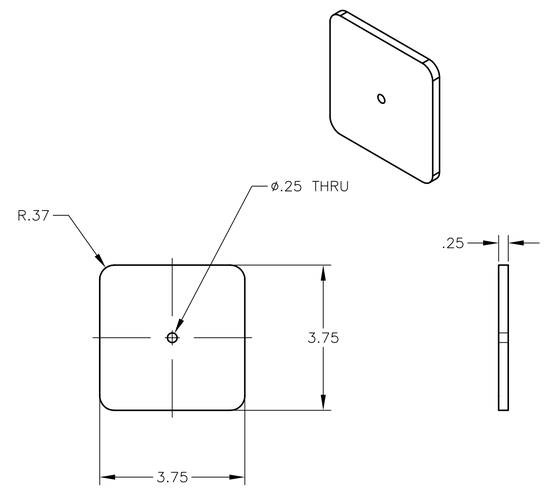

ITEM 8

QTY 4

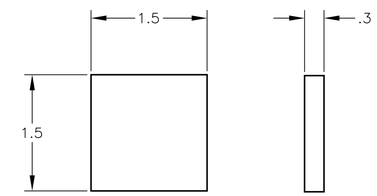

ITEM 12

QTY 4

FULL SCALE

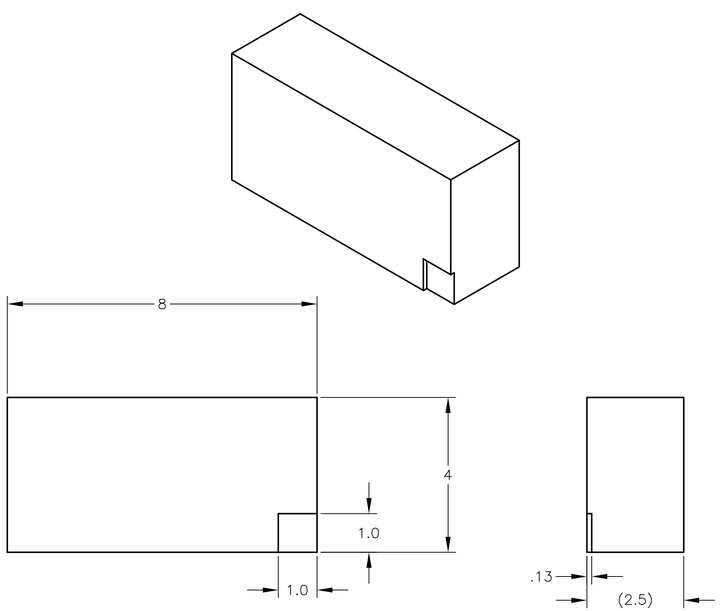

ITEM 9

QTY 2

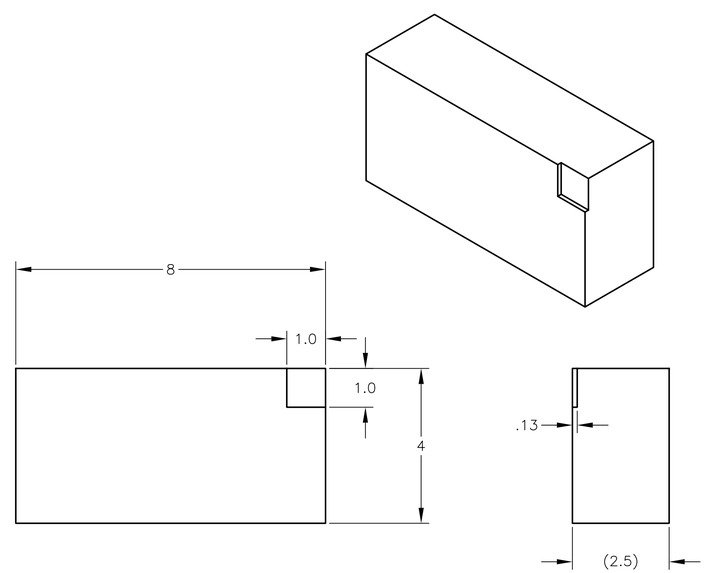

ITEM 10

QTY 2

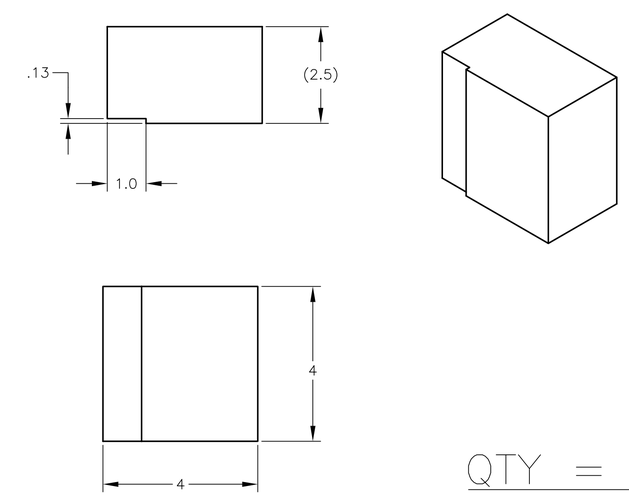

ITEM 11

QTY 6

QTY = 4

REV.	DESCRIPTION	BY	CHK'D

UNLESS NOTED OTHERWISE DIMENSIONS IN INCHES

TOLERANCES

FRACT. ± 1/16
.X ± .03
.XX ± .01
.XXX ± .005
ANGLES ± 1Deg

MTM
Meyer Tool & Mfg., Inc.

BY: CME 08/05/03 CHK'D:

00918-0065 SHIPPING FRAM
BASE FRAME BEAM COMPONENTS

SCALE 1:2

CUSTOMER LBNL

JOB NO. 00918-0065

DWG. SF09

SIZE: D

REV. 0

THIS DRAWING AND DESIGN IS THE PROPERTY OF MEYER TOOL AND MFG. CO. UNAUTHORIZED USE OR REPRODUCTION IS STRICTLY PROHIBITED.