ITEM	QTY	DESCRIPTION	MAT'L

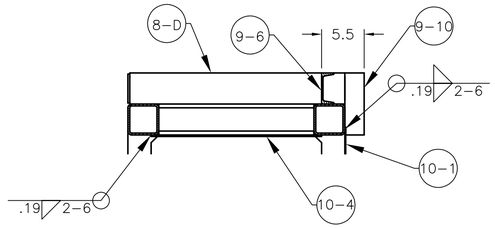

SECTION C-C
SCALE 1:10

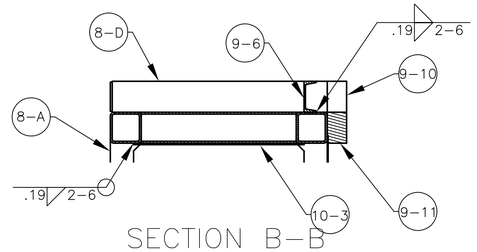

SECTION B-B
SCALE 1:10

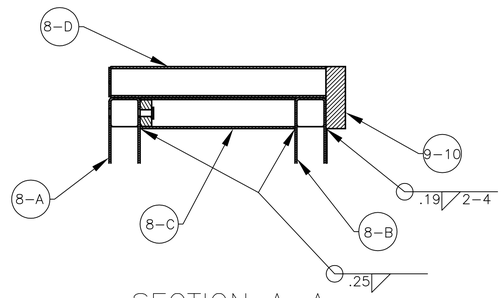

SECTION A-A
SCALE 1:10

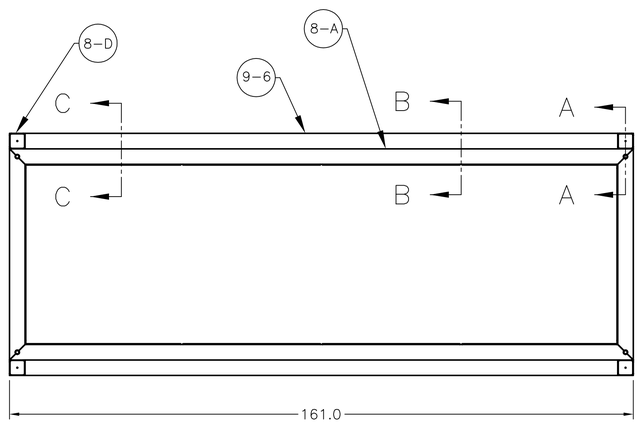

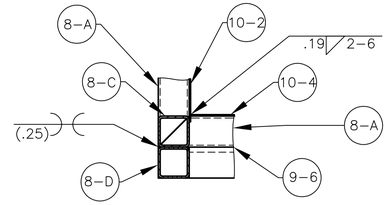

SECTION D-D
SCALE 1:10

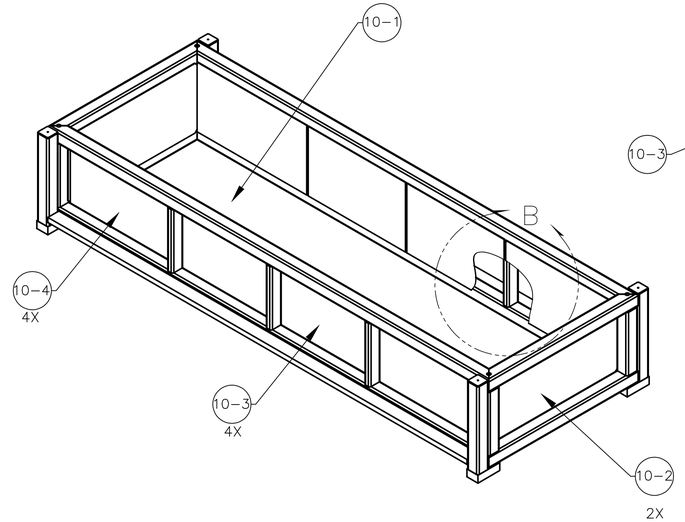

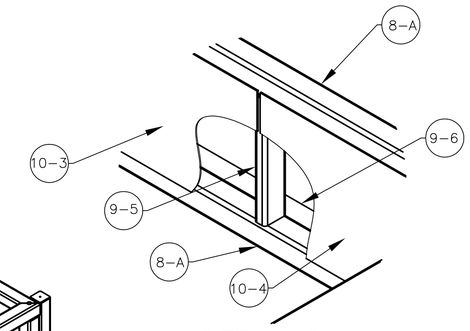

DETAIL B

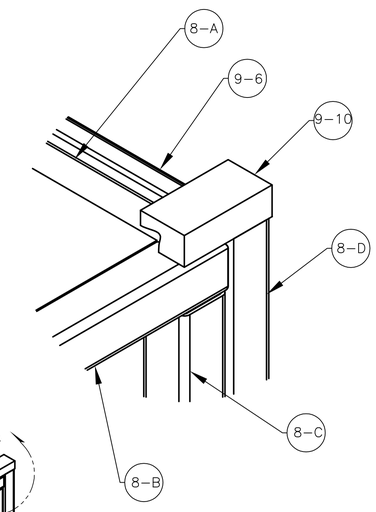

DETAIL A

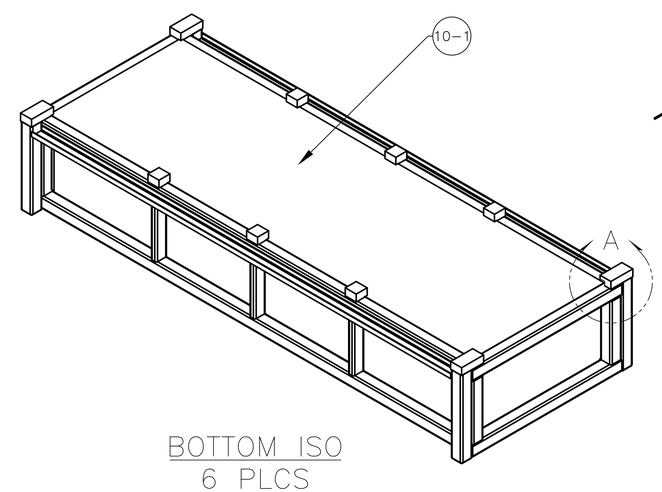

BOTTOM ISO
6 PLCS

QTY = 4

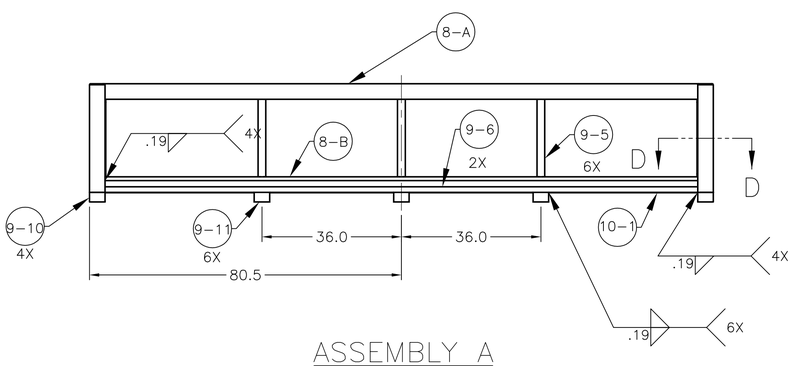

ASSEMBLY A

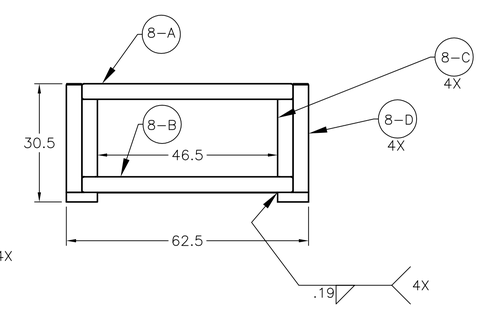

REV.	DESCRIPTION	BY	CHK'D

UNLESS NOTED OTHERWISE DIMENSIONS IN INCHES

TOLERANCES

FRACT. ± 1/16
.X ± .03
.XX ± .01
.XXX ± .005
ANGLES ± 1Deg

MTM
Meyer Tool & Mfg., Inc.

BY: CME 10/06/03 CHK'D:

00918-0065 SHIPPING FRAME
BASE FRAME WELDMENT

THIS DRAWING AND DESIGN IS THE PROPERTY OF MEYER TOOL AND MFG. CO. UNAUTHORIZED USE OR REPRODUCTION IS STRICTLY PROHIBITED.

SCALE	CUSTOMER	JOB NO.	DWG.	SIZE: D
1:20	LBNL	00918-0065	SF07	REV. 0