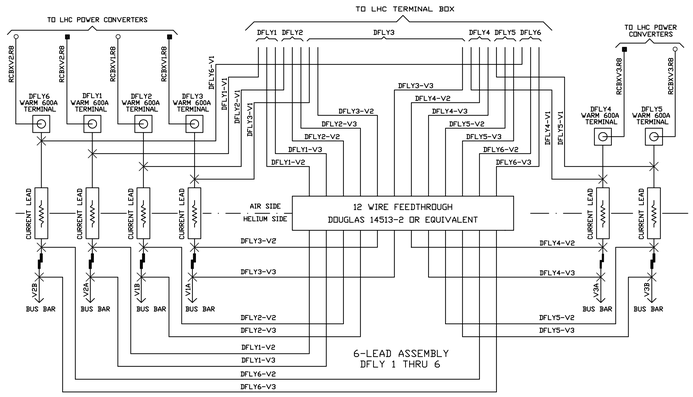

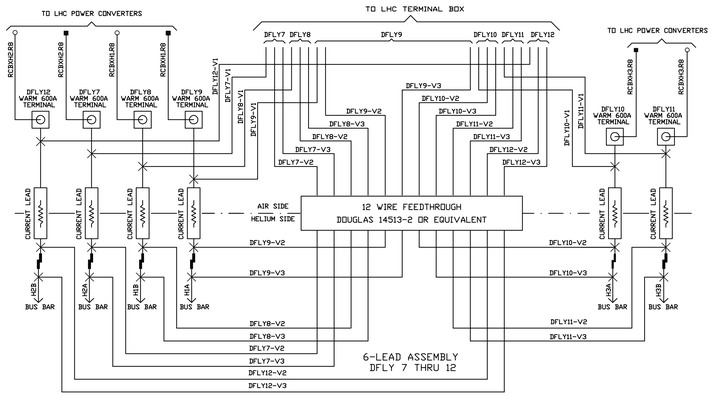

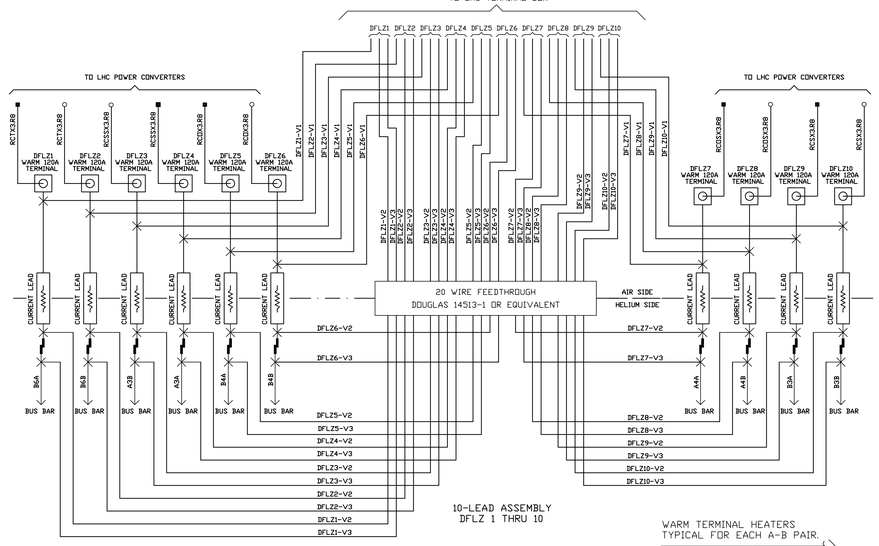

2

120A LEADS (DFLZ)
1 THRU 10

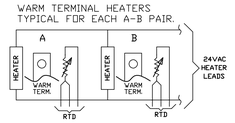

1

600A LEADS (DFLY)
1 THRU 14

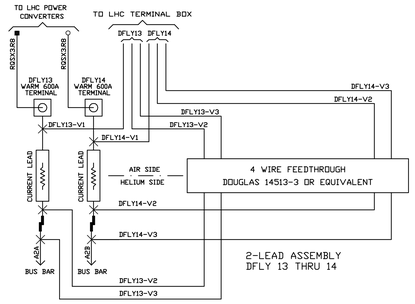

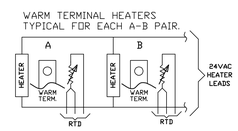

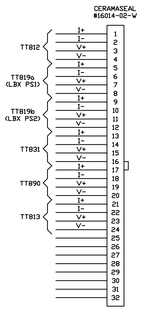

4

CRYOGENIC
PIPING SIGNALS

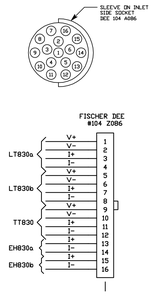

5

LEAD CHAMBER
SERVICE PORT

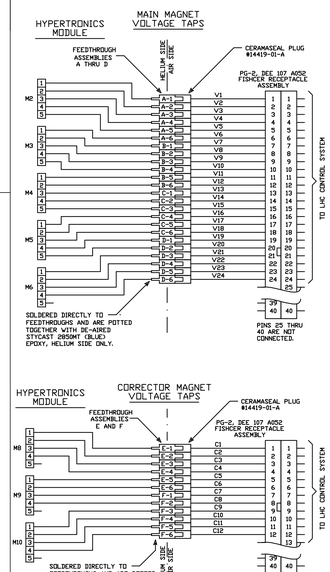

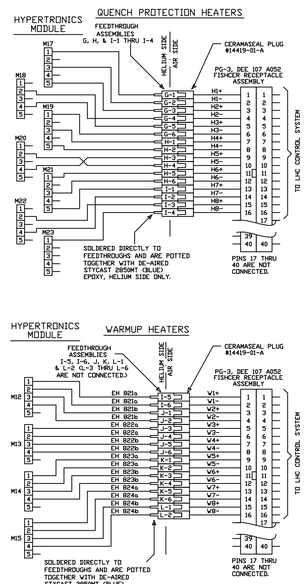

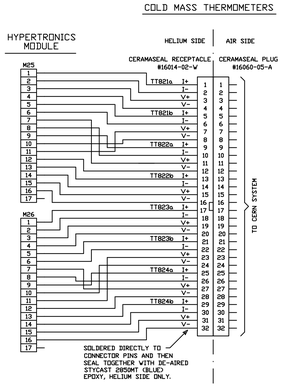

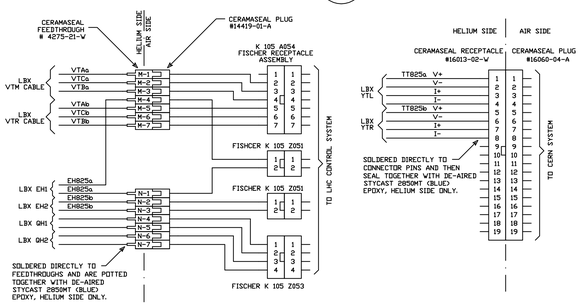

6 LBX

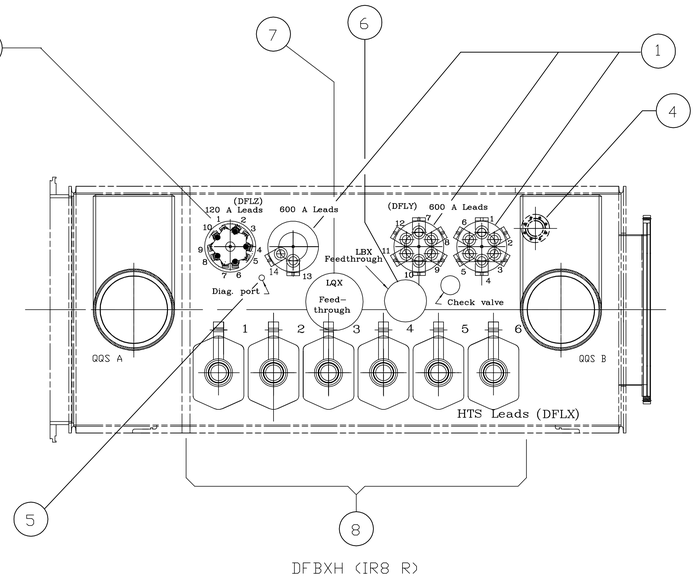

8

DFBXH (IR8 R)

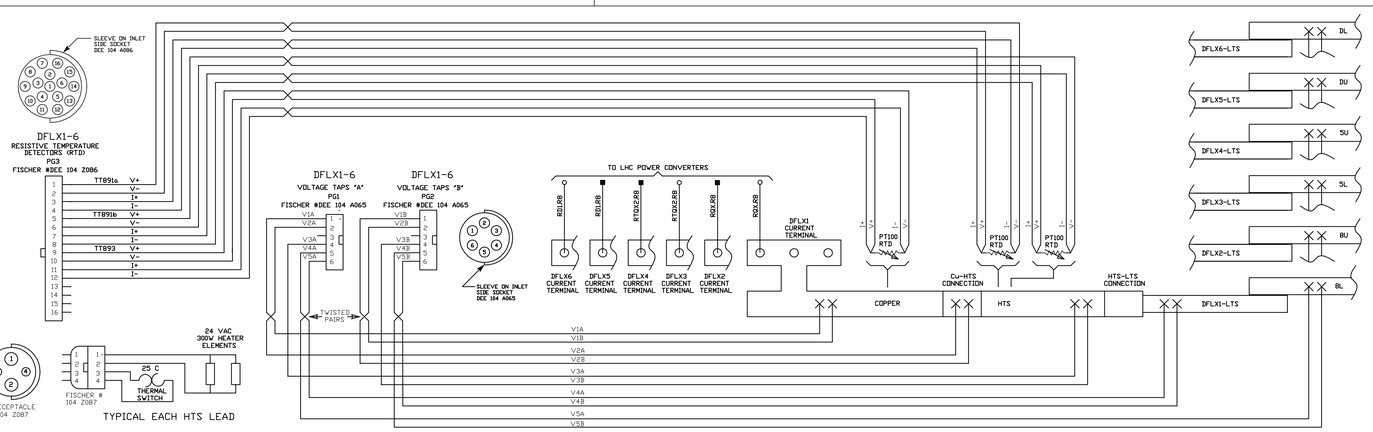

8

HTS LEADS
(DFLX)

SYMBOL LEGEND	
■	= A SIDE
○	= B SIDE
X	= SOLDER JOINT
	= CORRECTOR BUS SPLICE
	= MAIN BUS SPLICE

NOTES:

1) 600A LAP JOINTS PER LBNL PROCEDURE M982
AND 120A LAP JOINTS PER LBNL PROCEDURE M983.

REV	DWG	CHK	ZONE	DATE	CHANGES

	DESCRIPTION	MATERIAL	MAT. LOCATION

UNLESS OTHERWISE SPECIFIED
X.X ± 0.1 | FRAC. ± 1/64
X.XX ± 0.03 | ANGLES ± 1.00°
X.XXX ± 0.010 | FINISH 125 RMS
DO NOT SCALE PRINT
THREADS ARE CLASS 2
CHAMFER ENDS OF ALL SCREW THREADS 30°
CUT ROUND, 1.5 THREAD RELIEF ON MACHINED THREADS
BREAK EDGES .016 MAX. ON MACHINED WORK
REMOVE BURRS, WELD SPLATTER & LOOSE SCALE
IN ACCORDANCE WITH ASME Y14.5M & B46.1

SHOP ORDERS

ACCT NO.		SER NO.	
DEL TO		DATE REQD	
SURFACE TREATMT			
IDENT METHOD			
PROJECT NUMBER			
PROJECT NAME			
DWG J. STIRKKINEN BY	DATE 04-23-02		
CHK B. BINGHAM BY	DATE		
APR J. ZBASNIK BY	DATE		

ERNEST ORLANDO LAWRENCE
BERKELEY NATIONAL LABORATORY
UNIVERSITY OF CALIFORNIA - BERKELEY

LHC IR FEEDBOX
ELECTRICAL
DFBXH (IR8 R) WIRING DIAGRAMS

MICROFILMED:	DWG. TYPE	SHOWN ON	SCALE: 1/1	DO NOT SCALE PRINTS
	ASSEMBLY		SHEET 1 OF 1	
PATENT CLEAR:	Z5LCE2 DESIGN ACCT. NO.	LH2004 CATEGORY CODE	25I6206	REV.