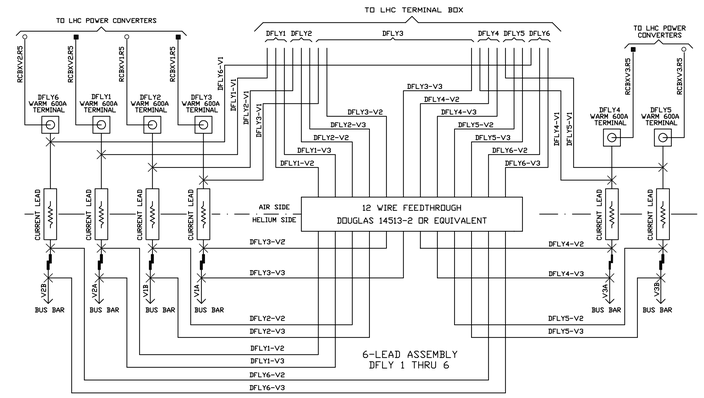

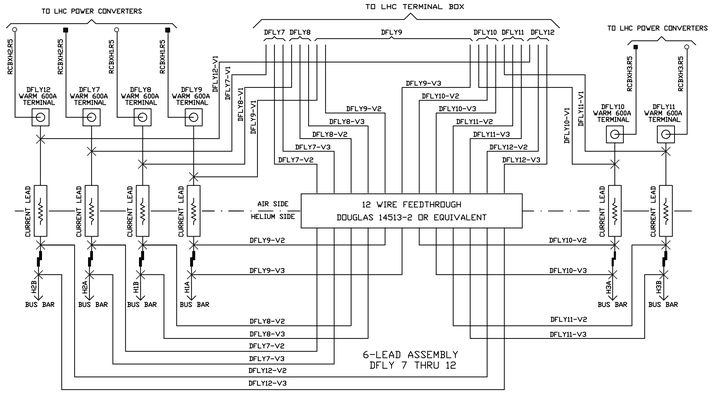

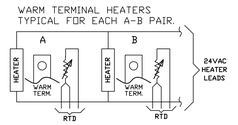

1

600A LEADS (DFLY)

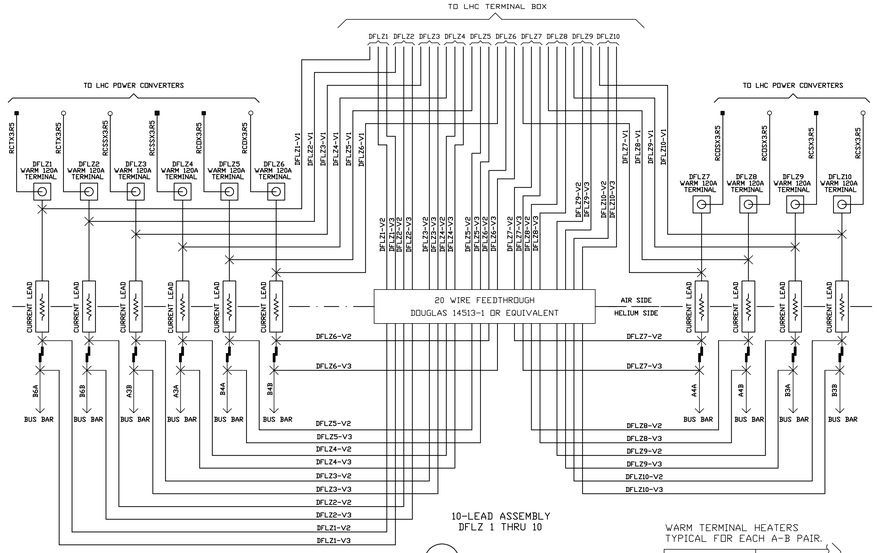

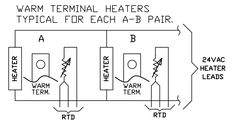

2

120A LEADS (DFLZ)

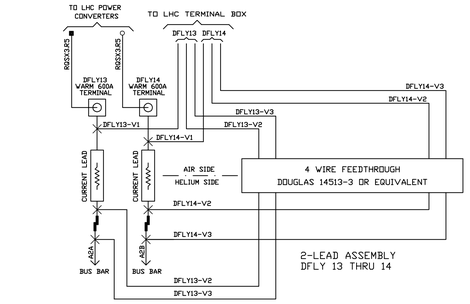

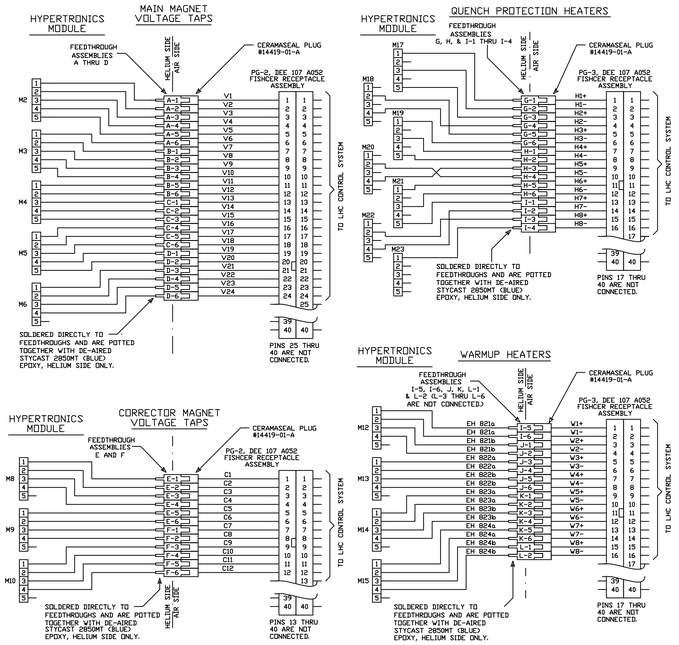

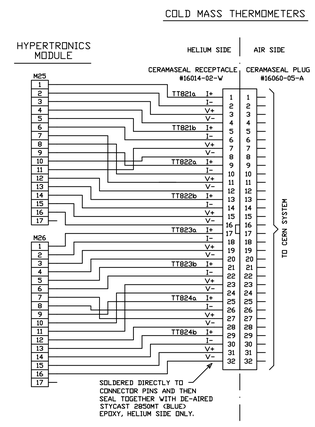

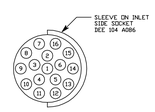

3

LEAD CHAMBER SERVICE PORT

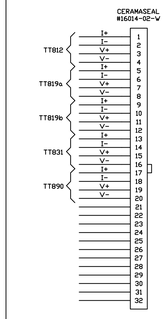

4

CRYOGENIC PIPING SIGNALS

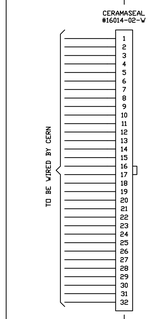

5

PRESSURE TAP AND HELIUM GUARD VOLUME

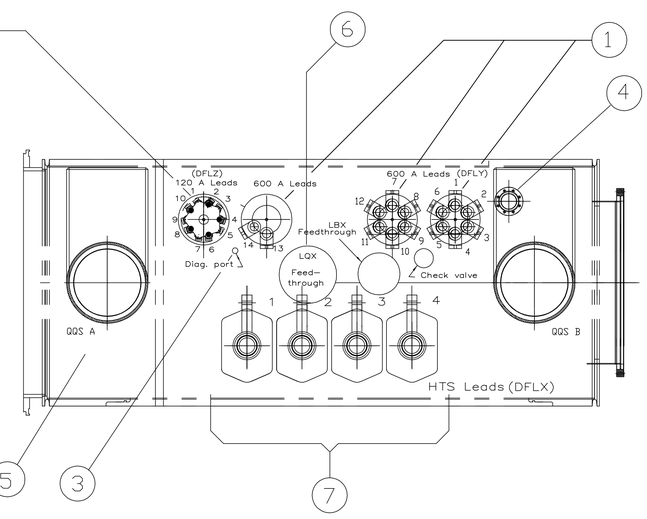

DFBXF (IR5 R)

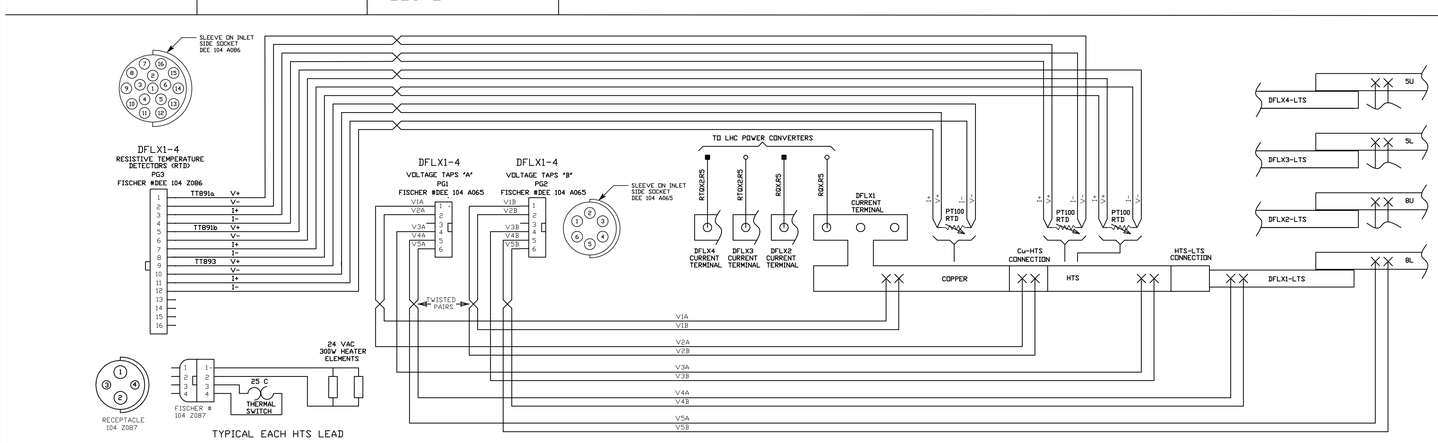

7

HTS LEADS (DFLX)

SYMBOL LEGEND	
■	= A SIDE
○	= B SIDE
╳	= SOLDER JOINT
	= CORRECTOR BUS SPLICE
	= MAIN BUS SPLICE

NOTES:

1) 600A LAP JOINTS PER LBNL PROCEDURE M982 AND 120A LAP JOINTS PER LBNL PROCEDURE M983.

REV	DWG	CHK	ZONE	DATE	CHANGES

UNLESS OTHERWISE SPECIFIED
TOLERANCES: X.X ± 0.1 FRAC. ± 1/64; X.XX ± 0.03 Angles ± 1.00°; X.XXX ± 0.010 FINISH 125 RMS
DO NOT SCALE PRINT
THREADS ARE CLASS 2
CHAMFER ENDS OF ALL SCREW THREADS 30°
CUT ROUND, 1.5 THREAD RELIEF ON MACHINED THREADS
BREAK EDGES .016 MAX ON FINISHED WORK
REMOVE BURRS, WELD SPLATTER & LOOSE SCALE IN ACCORDANCE WITH ASME Y14.5M & B46.1

SHOP ORDERS: SER NO.; ACCT NO.; NO. REQD; DATE ISSD; DEL TO; DATE REQD; SURFACE TREATMT; IDENT METHOD; PROJECT NUMBER; PROJECT NAME; DWG BY: J. STIRKKINEN, DATE 04-23-02; CHK BY: B. BINGHAM, DATE; APR BY: J. ZBASNIK, DATE

DESCRIPTION	MATERIAL	MAT. LOCATION

ERNEST ORLANDO LAWRENCE BERKELEY NATIONAL LABORATORY
UNIVERSITY OF CALIFORNIA - BERKELEY

LHC IR FEEDBOX
ELECTRICAL
DFBXF (IR5 R) WIRING DIAGRAMS

MICROFILMED: | DWG. TYPE: ASSEMBLY | SHOWN ON | SCALE: 1/1 | DO NOT SCALE PRINTS
SHEET 1 OF 1
PATENT CLEAR: | DESIGN ACCT. NO.: Z5LCE2 | CATEGORY CODE: LH2004 | 25I6186 | REV.

SIZE | REV | SH. | DWG. NO.