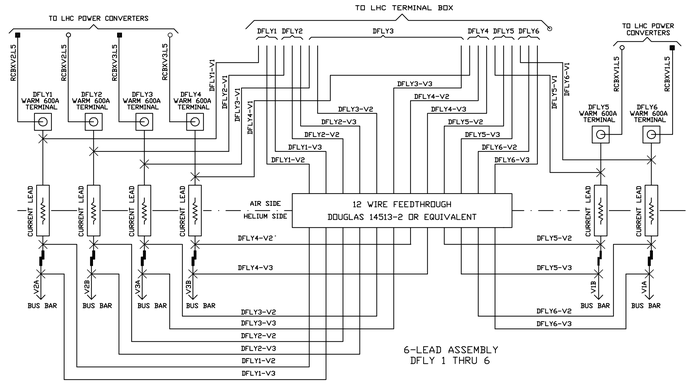

6-LEAD ASSEMBLY
DFLY 1 THRU 6

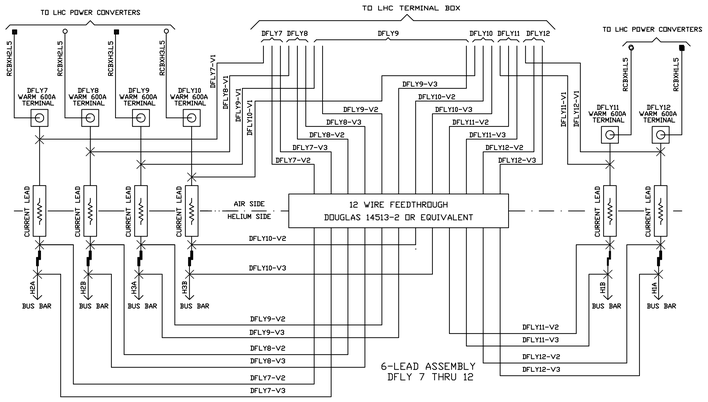

6-LEAD ASSEMBLY
DFLY 7 THRU 12

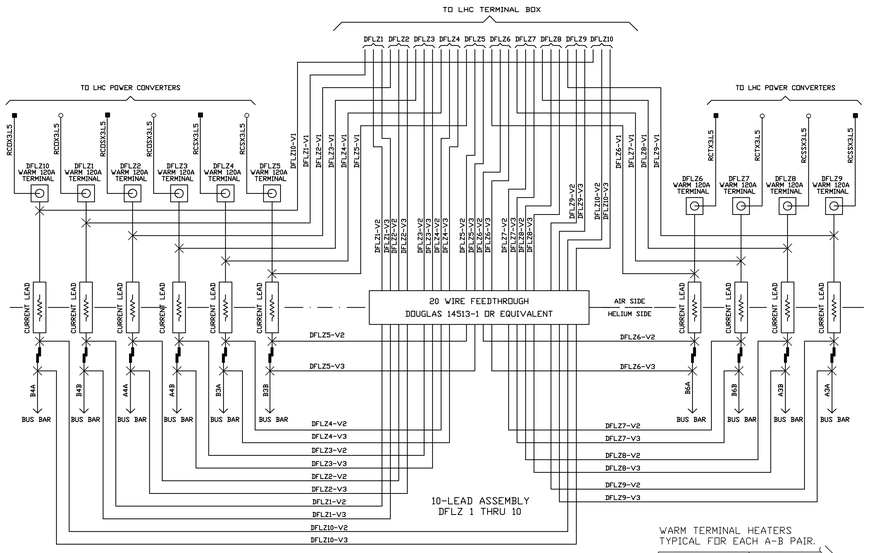

10-LEAD ASSEMBLY
DFLZ 1 THRU 10

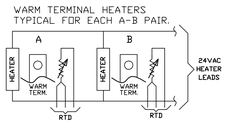

1

600A LEADS (DFLY)

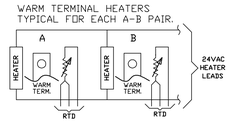

2

120A LEADS (DFLZ)

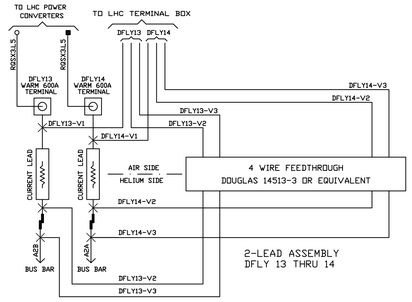

2-LEAD ASSEMBLY
DFLY 13 THRU 14

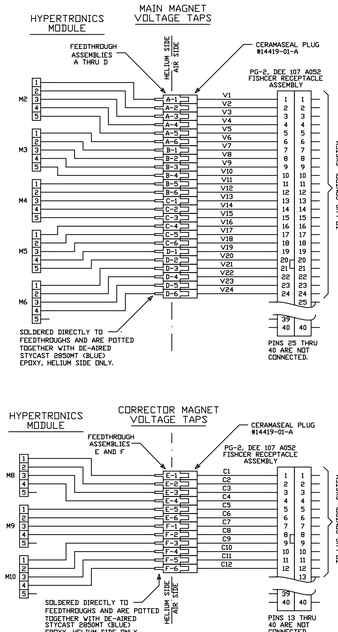

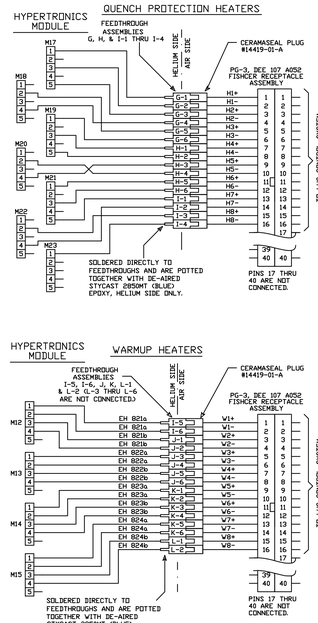

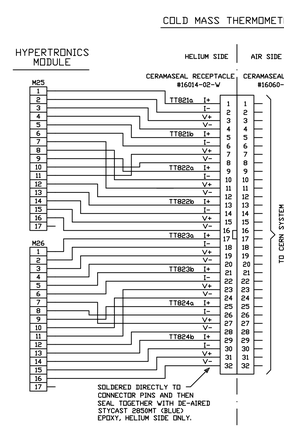

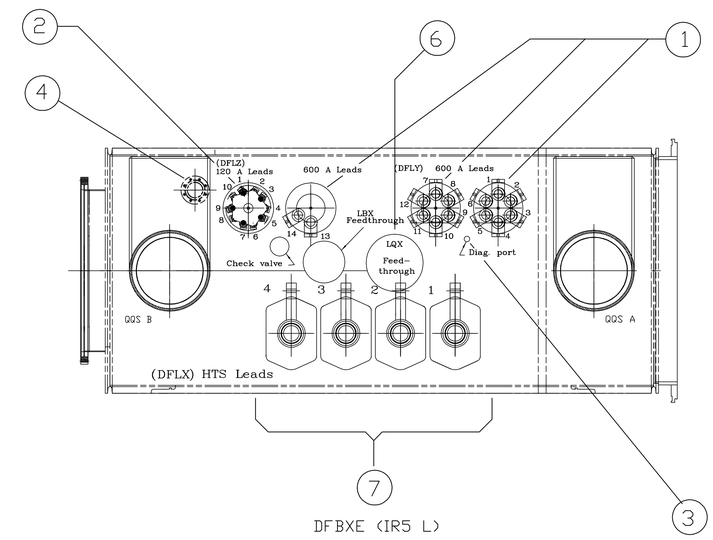

DFBXE (IR5 L)

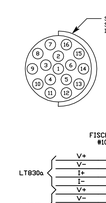

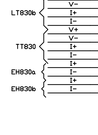

3

LEAD CHAMBER SERVICE PORT

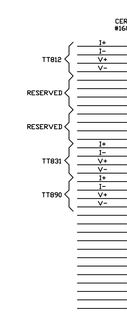

4

CRYOGENIC PIPING SIGNALS

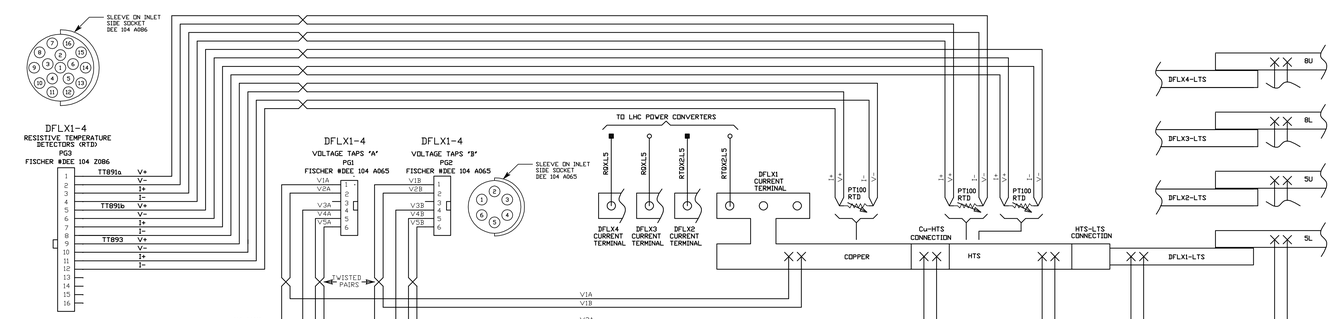

7

HTS LEADS (DFLX)

SYMBOL LEGEND	
■	= A SIDE
○	= B SIDE
X	= SOLDER JOINT
	= CORRECTOR BUS SPLICE
	= MAIN BUS SPLICE

NOTES:

1) 600A LAP JOINTS PER LBNL PROCEDURE M982
AND 120A LAP JOINTS PER LBNL PROCEDURE M983.

REV	DWG	CHK	ZONE	DATE	CHANGES

UNLESS OTHERWISE SPECIFIED
X.X ± 0.1 FRAC. ± 1/64
X.XX ± 0.03 Angles ± 1.00°
X.XXX ± 0.010 FINISH 125
DO NOT SCALE PRINT
THREADS ARE CLASS 2
CHAMFER ENDS OF ALL SCREW THREADS 30°
CUT ROUND, 1.5 THREADS RELIEF ON MACHINED THREADS
BREAK EDGES .016 MAX. ON MACHINED WORK
REMOVE BURRS, WELD SPLATTER & LOOSE SCALE
IN ACCORDANCE WITH ASME Y14.5M & ANI.1

SHOP ORDERS

ACCT NO.	NO. REQD	DATE	
DEL TO		DATE	
SURFACE TREATMT			
IDENT METHOD			
PROJECT NUMBER			
PROJECT NAME			
DWG BY	J. STIRKKINEN	DATE 04-23-02	
CHK BY	B. BINGHAM	DATE	
APR BY	Z. ZBASNIK	DATE	

DESCRIPTION	MATERIAL	MAT. LOCATION

ERNEST ORLANDO LAWRENCE BERKELEY NATIONAL LABORATORY
UNIVERSITY OF CALIFORNIA - BERKELEY

LHC IR FEEDBOX
ELECTRICAL
DFBXE (IR5 L) WIRING DIAGRAMS

MICROFILMED:	DWG. TYPE	SHOWN ON	SCALE: 1/1	DO NOT SCALE PRINTS
	ASSEMBLY		SHEET 1 OF 1	
PATENT CLEAR:	DESIGN ACCT. NO. Z5LCE2	CATEGORY CODE LH2004	2516176	REV.

LBNL FILE: 2516176.dwg