DWG. NO.	SIZE	REV.	SH.
25M9524	A	1	

ITEM	PART NO	REQD	DESCRIPTION	MATERIAL
2	-		SPLIT RING	SS 304L
1	-		PIPE, PER ASTM A312, 6", SCH 40	SS 304L

NOTES: UNLESS OTHERWISE SPECIFIED,

1. DIMENSIONS AND TOLERANCING PER ANSI Y14.5M-1982 UNITS ARE IN INCHES [mm] UNLESS OTHERWISE SPECIFIED.
2. USE OF SULFUR OR SILICONE BEARING OILS, LUBRICANTS, OR COOLANTS ARE STRICTLY PROHIBITED
3. USE OF RESIN OR RUBBER BONDED ADRASIVES UNDER POWER IS STRICTLY PROHIBITED. USE VITREOUS BONDED ABRASIVES ONLY.
4. THIS IS A HIGH VACUUM COMPONENET. CLEAN AFTER MACHINING USING A NON-ETCHING ALKALI BASED SOLUTION.
6. PROTECT FINISHED PART BY BAGGING OR SIMILAR METHOD TO PROTECT AND MAINTAIN CLEANLINESS DURING SHIPMENT AND STORAGE.

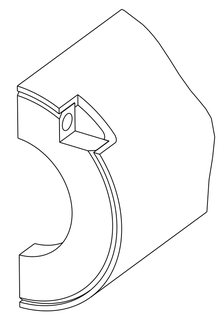

SCALE 1/2

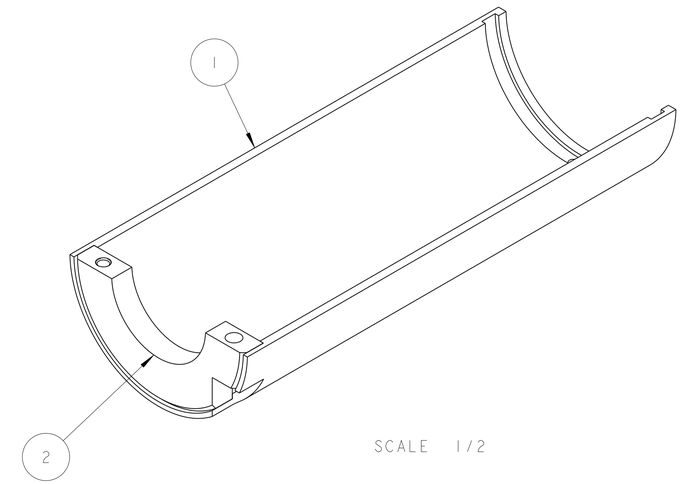

SCALE 1/2

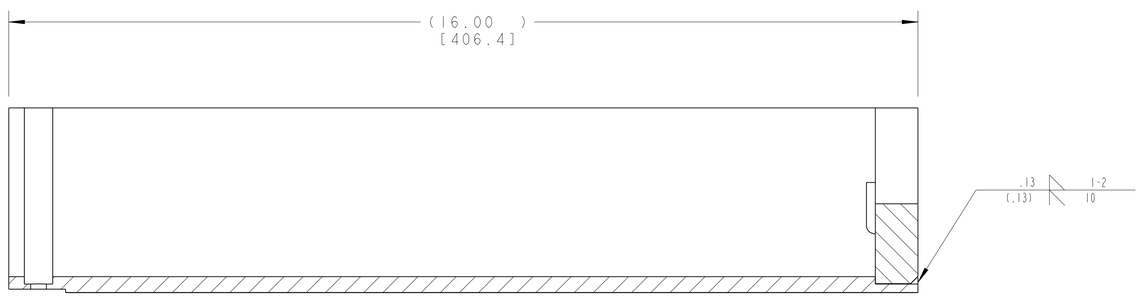

SECTION A - A

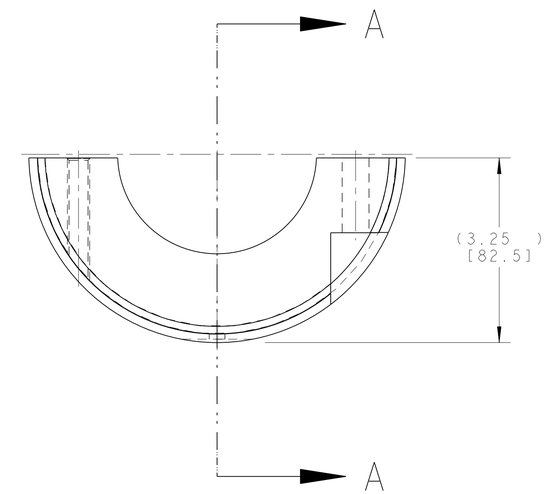

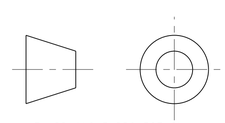

THIRD ANGLE PROJECTION

REV	DWG	CHK	ZONE	DATE	CHANGES
A	RLM	JPZ		2/21/03	INITIAL RELEASE

UNLESS OTHERWISE SPECIFIED

TOLERANCES		
X.X ± 0.1	FRAC. ± 1/64	
X.XX ± 0.03	Angles ± 1.00°	
X.XXX ± 0.010	FINISH 125 √(μin)	

DO NOT SCALE PRINT

THREADS ARE CLASS 2
CHAMFER ENDS OF ALL SCREW TREADS 30°
CUT ROUND, 1.5 THREAD RELIEF ON MACHINED THREADS
BREAK EDGES .016 MAX. ON MACHINED WORK
REMOVE BURRS, WELD SPLATTER & LOOSE SCALE
IN ACCORDANCE WITH ASME Y14.5M & B46.1

SHOP ORDERS

ACCT NO.	NO. REQD	SER NO.	-
DEL TO		DATE ISSD	-
SURFACE TREATMT	-	DATE REQD	-
IDENT METHOD	TAG		
PROJECT NUMBER	N/A		
PROJECT NAME	N/A		
DWG BY	AL HARRIS	DATE	06-Feb-03
CHK BY	R LA MANTIA	DATE	2/14/03
APR BY	J ZBASNIK	DATE	2/21/03

ERNEST ORLANDO LAWRENCE BERKELEY NATIONAL LABORATORY
UNIVERSITY OF CALIFORNIA - BERKELEY

LHC IR FEEDBOX
CRYOGENICS
BELLOWS RESTRAINT SHELL

MICROFILMED:	DWG. TYPE	SHOWN ON	SCALE: 3/4	DO NOT SCALE PRINTS
	ASSEM	-	SHEET 1 OF 2	
PATENT CLEAR:	DESIGN ACCT. NO.	CATEGORY CODE	DWG. NO.	SIZE / REV.
	Z5LCE3	LH2003	25M9524	A

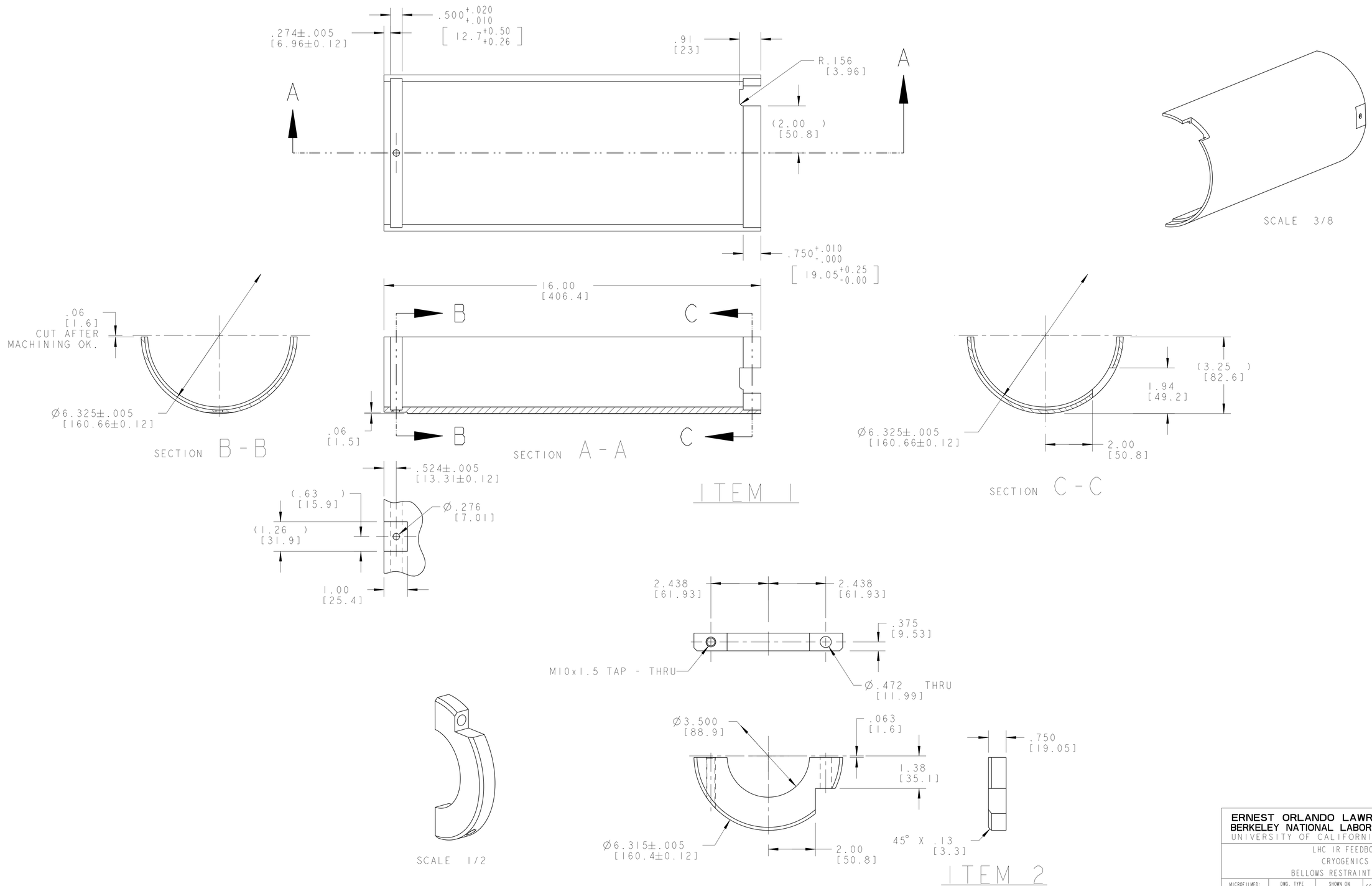

ERNEST ORLANDO LAWRENCE
BERKELEY NATIONAL LABORATORY
UNIVERSITY OF CALIFORNIA - BERKELEY

LHC IR FEEDBOX
CRYOGENICS
BELLOWS RESTRAINT SHELL

MICROFILMED:	DWG. TYPE	SHOWN ON	SCALE: 1/2	DO NOT SCALE PRINTS
	ASSEM	-	SHEET 2 OF 2	
PATENT CLEAR:	DESIGN ACCT. NO.	CATEGORY CODE	DWG. NO.	SIZE / REV.
	Z5LCE3	LH2003	25M9524	A