NOTES: (UNLESS OTHERWISE SPECIFIED)

1. THIS IS A CRYOGENIC VACUUM COMPONENT.
2. DIMENSIONS AND TOLERANCING PER ANSI Y14.5M-1982. UNITS ARE IN INCHES [mm] UNLESS OTHERWISE SPECIFIED.
3. USE OF SULFUR OR SILICONE BEARING OILS, LUBRICANTS, OR COOLANTS ARE STRICTLY PROHIBITED.
4. USE OF RESIN OR RUBBER BONDED ABRASIVES UNDER POWER IS STRICTLY PROHIBITED. USE VITREOUS BONDED ABRASIVES ONLY.
5. ITEM 7 CABLES FACE INWARD, ITEM 8 CABLES FACE OUTWARD
6. THIN EDGE OF ITEM 7 CABLE IS ORIENTED TO THICK EDGE OF ITEM 8 PARTNER.
7. ENDS OF CONDUCTOR TO BE TINNED 1" WITH Sn96.5 Ag3.5 SOLDER, 60/40 SnPb OKAY FOR INTERNAL JOINTS.
8. ITEMS 7 & 8 POTTED INTO ITEMS 3, 4 & 6 WITH STYCAST 2850MT (BLUE) USING ESTABLISHED LBNL PROCEDURES.

ITEM	PART NO	REQD	DESCRIPTION	MATERIAL
8	-	2	COPPER STABILIZER CABLE	CDA 101
7	-	2	LHC IRQ INNER CABLE	NbTi/Cu
6	251448	1	LAMBDA PLUG, WELD NECK FLANGE	SS 304L
5	251447	1	LAMBDA PLUG, TIE DOWN RING	SS 304L
4	25M935	1	2 BUS BAR LAMBDA PLUG BODY	NEMA G10-CR
3	25M936	1	2 BUS BAR LAMBDA PLUG CAP	Nema G10
2	-	12	WASHER, M12, MC MASTER #91116A180	SS
1	-	12	SHCS M12, 45mm LG., MC MASTER #91292A229	SS

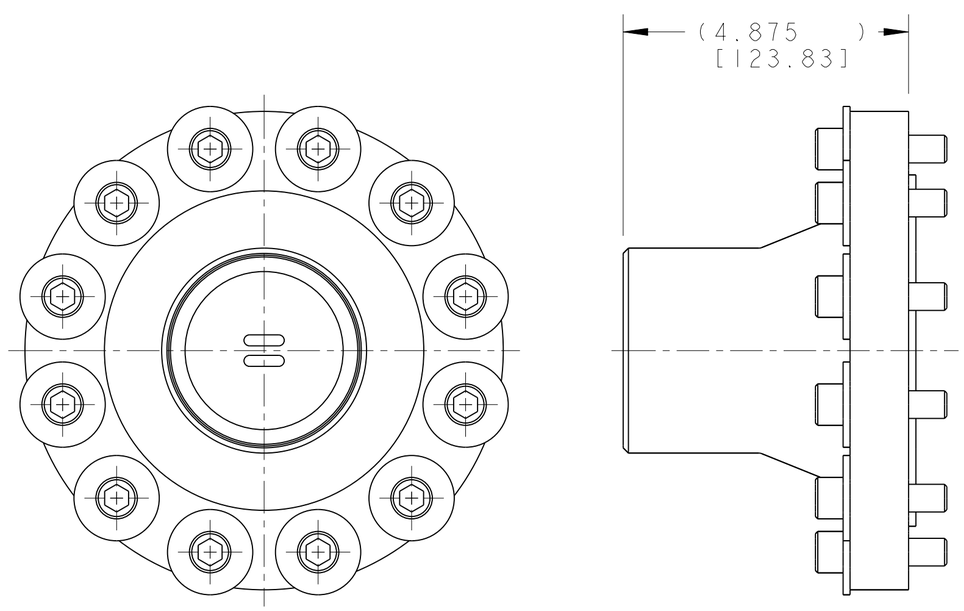

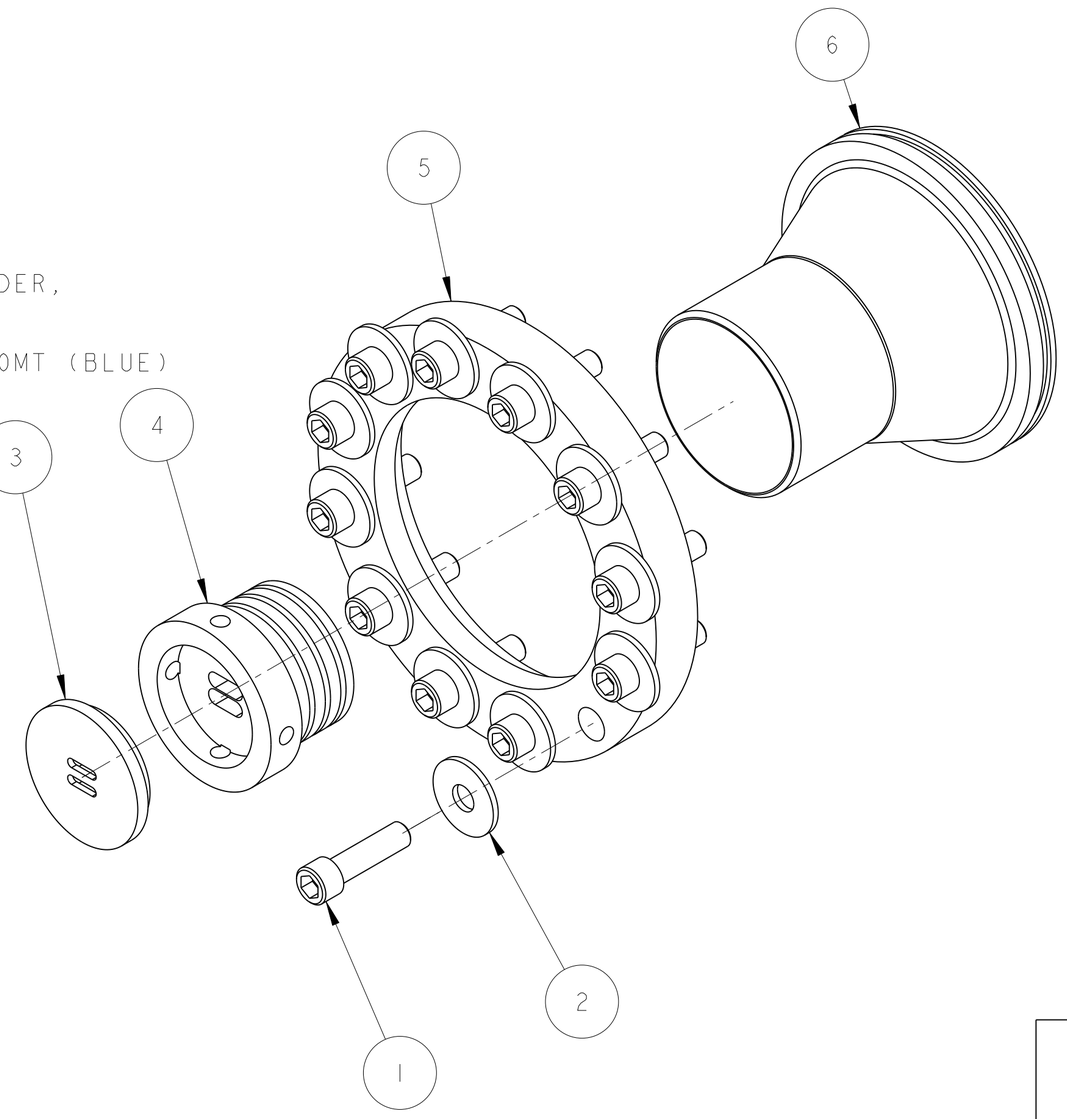

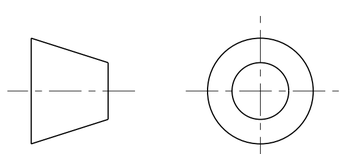

THIRD ANGLE PROJECTION

REV	DWG	CHK	ZONE	DATE	CHANGES
B	RLM	JPZ		1/8/03	INITIAL RELEASE

UNLESS OTHERWISE SPECIFIED

TOLERANCES		
	X.X ± 0.1	FRAC. ± 1/64
	X.XX ± 0.03	Angles ± 1.00°
	X.XXX ± 0.010	FINISH 125 √(µin)

DO NOT SCALE PRINT

THREADS ARE CLASS 2
CHAMFER ENDS OF ALL SCREW TREADS 30°
CUT ROUND, 1.5 THREAD RELIEF ON MACHINED THREADS
BREAK EDGES .016 MAX. ON MACHINED WORK
REMOVE BURRS, WELD SPLATTER & LOOSE SCALE
IN ACCORDANCE WITH ASME Y14.5M & B46.1

SHOP ORDERS

ACCT NO.	NO. REQD	DATE ISSD	-
DEL TO		DATE REQD	-
SURFACE TREATMT	-		
IDENT METHOD	TAG		
PROJECT NUMBER	N/A		
PROJECT NAME	N/A		
DWG BY	KNOLLS	DATE	11-Dec-01
CHK BY	ZBASNIK, OSHATZ	DATE	31-JUL-02
APR BY	ZBASNIK, OSHATZ	DATE	31-JUL-02

SER NO. -

N/A (logo)

ERNEST ORLANDO LAWRENCE BERKELEY NATIONAL LABORATORY
UNIVERSITY OF CALIFORNIA - BERKELEY

LHC IR FEEDBOX
CRYOGENICS
DI LAMBDA PLUG ASSY

MICROFILMED:	DWG. TYPE	SHOWN ON	SCALE: 1/2	DO NOT SCALE PRINTS
	ASSEM	-	SHEET 1 OF 1	
PATENT CLEAR:	DESIGN ACCT. NO.	CATEGORY CODE	DWG. NO.	SIZE / REV.
	Z5LCE2	LH2003	25M9453	B

DWG. NO. 25M9453 SIZE B REV. SH. 1

Dwg. File: 25M945 Model File: 25M945

Rev. 17-Jul-2000 J. C. Oshatz