| DESCRIPTION | MATERIAL | MAT. LOCATION |
|---|---|---|
| PLATE, 1/4" THICK | SS 304L | |

NOTES: UNLESS OTHERWISE SPECIFIED,

1. DIMENSIONS AND TOLERANCING PER ANSI Y14.5M-1982 UNITS ARE IN INCHES UNLESS OTHERWISE SPECIFIED.
2. USE OF SULFUR OR SILICONE BEARING OILS, LUBRICANTS, OR COOLANTS ARE STRICTLY PROHIBITED
3. USE OF RESIN OR RUBBER BONDED ADRASIVES UNDER POWER IS STRICTLY PROHIBITED. USE VITREOUS BONDED ABRASIVES ONLY.
4. THIS IS A HIGH VACUUM COMPONENET. CLEAN AFTER FORMING USING A NON-ETCHING ALKALI BASED SOLUTION.
6. PROTECT FINISHED PART BY BAGGING OR SIMILAR METHOD TO PROTECT AND MAINTAIN CLEANLINESS DURING SHIPMENT AND STORAGE.

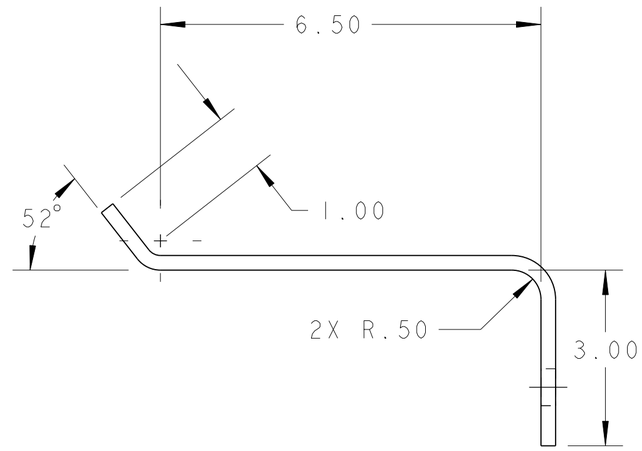


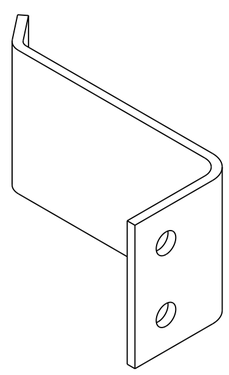

SCALE 3/8

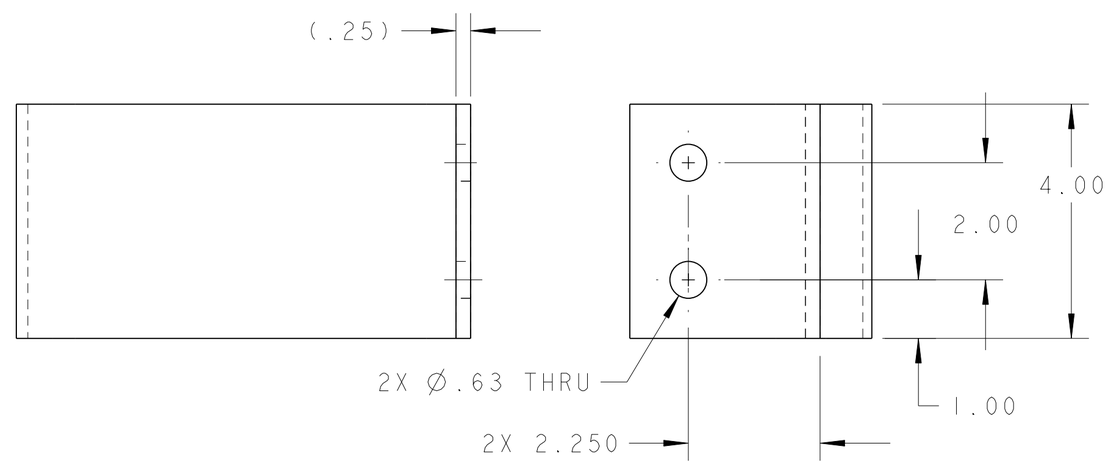


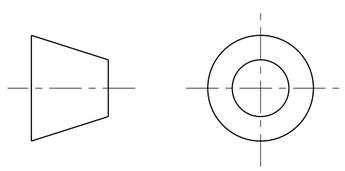

THIRD ANGLE PROJECTION

| REV | DWG | CHK | ZONE | DATE | CHANGES |
|---|---|---|---|---|---|
| A | ARH | SPV | | 18-11-02 | INITIAL RELEASE |

UNLESS OTHERWISE SPECIFIED

| TOLERANCES | | |
|---|---|---|
| | X.X ± 0.1 | FRAC. ± 1/64 |
| | X.XX ± 0.03 | Angles ± 1.00° |
| | X.XXX ± 0.010 | FINISH 125 √ (µin) |

DO NOT SCALE PRINT

THREADS ARE CLASS 2
CHAMFER ENDS OF ALL SCREW TREADS 30°
CUT ROUND, 1.5 THREAD RELIEF ON MACHINED THREADS
BREAK EDGES .016 MAX. ON MACHINED WORK
REMOVE BURRS, WELD SPLATTER & LOOSE SCALE
IN ACCORDANCE WITH ASME Y14.5M & B46.1

**SHOP ORDERS**

| | | | |
|---|---|---|---|
| ACCT NO. | NO. REQD | DATE ISSD | - |
| DEL TO | | DATE REQD | - |
| SURFACE TREATMT | - | | |
| IDENT METHOD | TAG | | |
| PROJECT NUMBER | N/A | | N/A (logo) |
| PROJECT NAME | N/A | | |
| DWG BY | A. HARRIS | DATE | 18-Nov-02 |
| CHK BY | S. VIROSTEK | DATE | 20-Nov-02 |
| APR BY | D. OSHATZ | DATE | 22-Nov-02 |

SER NO. -

**ERNEST ORLANDO LAWRENCE BERKELEY NATIONAL LABORATORY**
UNIVERSITY OF CALIFORNIA - BERKELEY

LHC IR FEEDBOX
CRYOGENICS
XB VERTICAL SUPORT BRACKET

| MICROFILMED: | DWG. TYPE | SHOWN ON | SCALE: 1/2 | DO NOT SCALE PRINTS |
|---|---|---|---|---|
| | PART | - | SHEET 1 OF 1 | |
| PATENT CLEAR: | DESIGN ACCT. NO. | CATEGORY CODE | DWG. NO. | SIZE / REV. |
| | 25LCE2 | LH2003 | 25M9283 | A |

DWG. NO. 25M9283 SIZE A REV. 1 SH.

Dwg. File: 25M928 Model File: 25M928

Rev. 17-Jul-2000 J. K. Osborn