DWG. NO.	SIZE	REV.	SH.
25M9262	A		1

DESCRIPTION	MATERIAL	MAT. LOCATION
SHEET METAL, .1" THICK	304 SS	-

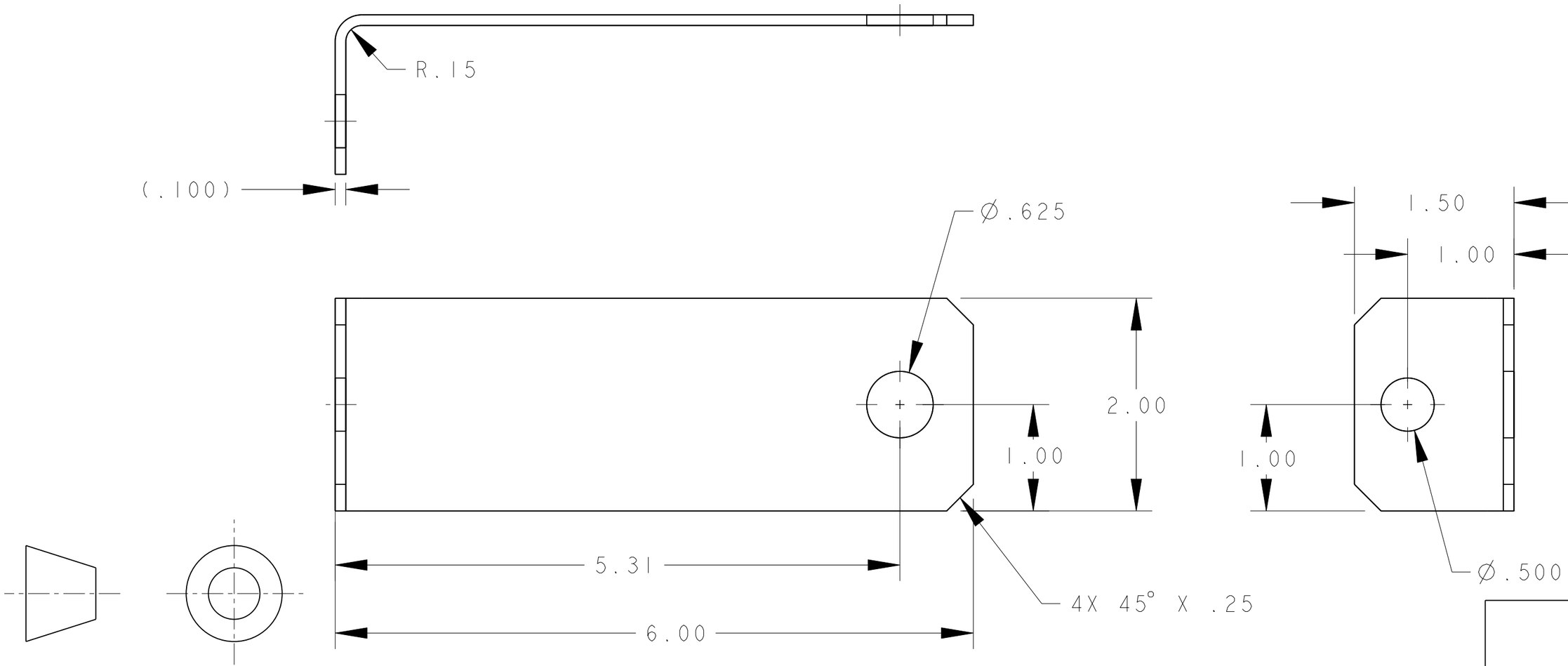

REV	DWG	CHK	ZONE	DATE	CHANGES
A	MJK	DPO		11/6/02	INITIAL RELEASE

UNLESS OTHERWISE SPECIFIED

TOLERANCES		
	X.X ± 0.1	FRAC. ± 1/64
	X.XX ± 0.03	Angles ± 1.00°
	X.XXX ± 0.010	FINISH 125 √ (µin)

DO NOT SCALE PRINT

THREADS ARE CLASS 2
CHAMFER ENDS OF ALL SCREW TREADS 30°
CUT ROUND, 1.5 THREAD RELIEF ON MACHINED THREADS
BREAK EDGES .016 MAX. ON MACHINED WORK
REMOVE BURRS, WELD SPLATTER & LOOSE SCALE
IN ACCORDANCE WITH ASME Y14.5M & B46.1

SHOP ORDERS

ACCT NO. -	NO. REQD -	SER NO. -	
DEL TO -		DATE ISSD -	
SURFACE TREATMT -		DATE REQD -	
IDENT METHOD TAG			
PROJECT NUMBER N/A		N/A (logo)	
PROJECT NAME N/A			
DWG BY D. OSHATZ		DATE 05-Nov-02	
CHK BY S. VIROSTEK		DATE 12-Nov-02	
APR BY D. OSHATZ		DATE 12-Nov-02	

ERNEST ORLANDO LAWRENCE BERKELEY NATIONAL LABORATORY
UNIVERSITY OF CALIFORNIA - BERKELEY

LHC IR FEEDBOX
CRYOGENICS
XB HANGER, ANGLE PLATE

MICROFILMED:	DWG. TYPE	SHOWN ON	SCALE: 1/1	DO NOT SCALE PRINTS
	PART	-	SHEET 1 OF 1	
PATENT CLEAR:	DESIGN ACCT. NO.	CATEGORY CODE	DWG. NO.	SIZE / REV.
	Z5LCE2	LH2003	25M9262	A

Dwg. File: 25M926 Model File: 25M926

Rev 1/29/2000 J. R. Osborn