DWG. NO.	SIZE	REV.	SH.
25M9234		A	1

ITEM	PART NO	REQD	DESCRIPTION	MATERIAL
9	25M926	1	XB HANGER, ANGLE PLATE	304 SS
8	25M925	1	XB THRUST PLATE	INVAR 36
7	25M924	1	XB THRUST RING	SS 304L
6	25M922	2	THRUST SUPPORT WITH THERMAL BREAK	-
5	25M810	1	THRUST SUPPORT WITH THERMAL BREAK	-
4	-	1	HEX HD BOLT, 1/2-13 X 1-1/4 LG	18-8 SS
3	-	7	1/2" FLAT WASHER	18-8 SS
2	-	13	1/2" HEX NUT	18-8 SS
1	-	3	1/2-13 UNC THREADED ROD X 8.5" LG	18-8 SS

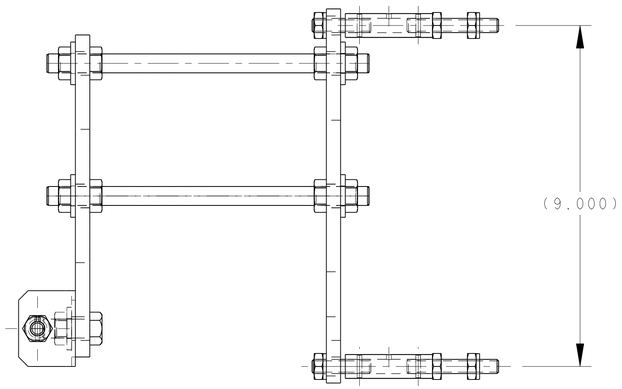

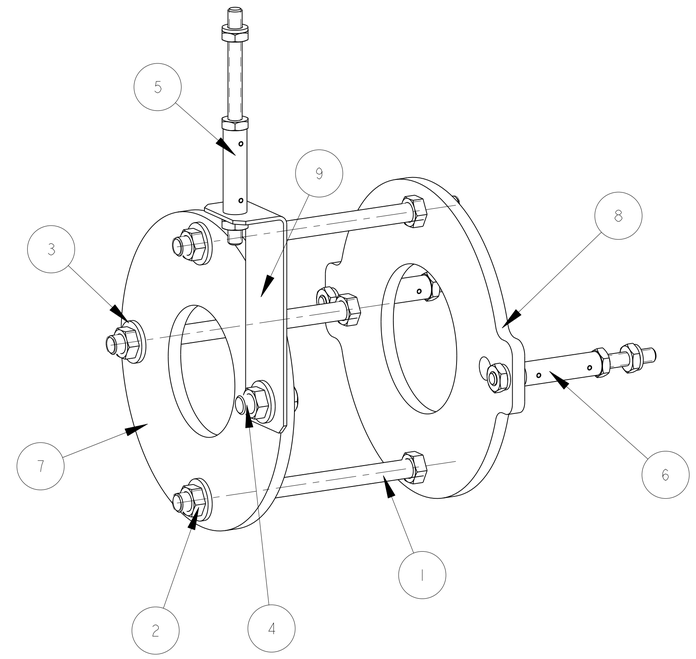

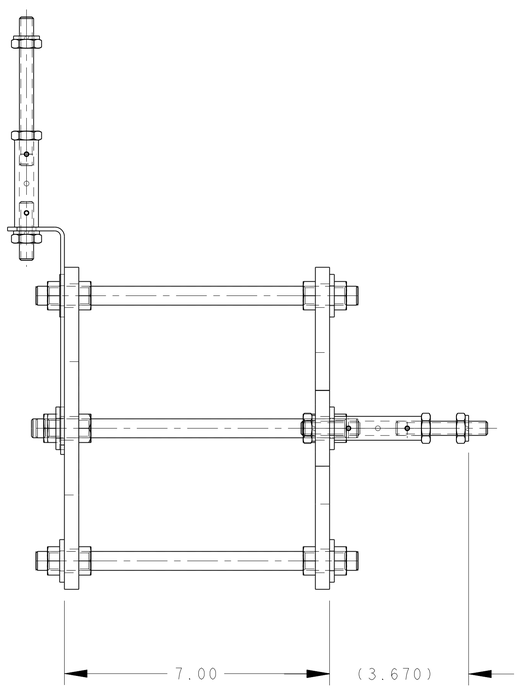

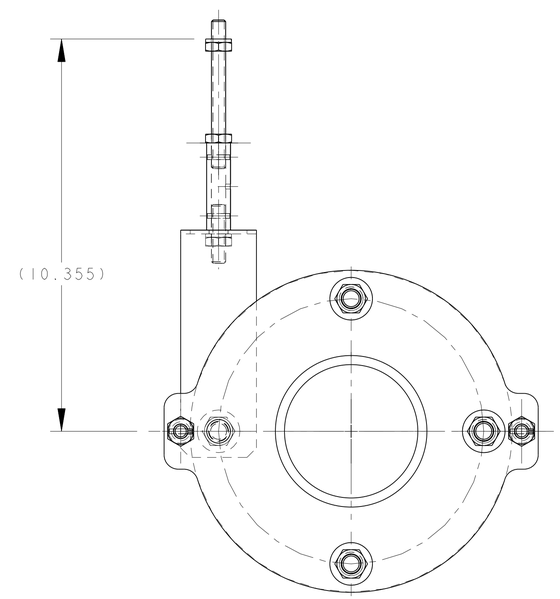

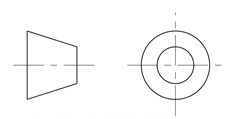

THIRD ANGLE PROJECTION

NOTES: (UNLESS OTHERWISE SPECIFIED)

1. THIS IS A CRYOGENIC VACUUM COMPONENT.
2. CLEANING PROCEDURE : PER VENDOR SPECIFICATION WITH LBNL APPROVAL.
3. PACKAGING AND STORAGE PROCEDURE OF THE COMPONENTS: PER VENDOR SPCIFICATION WITH LBNL APPROVAL.
4. DIMENSIONS AND TOLERANCING PER ANSI Y14.5M-1982. UNITS ARE IN INCHES UNLESS OTHERWISE SPECIFIED.
5. USE OF SULFUR OR SILICONE BEARING OILS, LUBRICANTS, OR COOLANTS ARE STRICTLY PROHIBITED.
6. USE OF RESIN OR RUBBER BONDED ABRASIVES UNDER POWER IS STRICTLY PROHIBITED. USE VITREOUS BONDED ABRASIVES ONLY.

REV	DWG	CHK	ZONE	DATE	CHANGES
A	MJK	DPO		11/6/02	INITIAL RELEASE

UNLESS OTHERWISE SPECIFIED

TOLERANCES		
	X.X ± 0.1	FRAC. ± 1/64
	X.XX ± 0.03	Angles ± 1.00°
	X.XXX ± 0.010	FINISH 125/(μin)

DO NOT SCALE PRINT

THREADS ARE CLASS 2
CHAMFER ENDS OF ALL SCREW TREADS 30°
CUT ROUND, 1.5 THREAD RELIEF ON MACHINED THREADS
BREAK EDGES .016 MAX. ON MACHINED WORK
REMOVE BURRS, WELD SPLATTER & LOOSE SCALE
IN ACCORDANCE WITH ASME Y14.5M & B46.1

SHOP ORDERS

ACCT NO. -	NO. REQD -	SER NO. -	
DEL TO -		DATE ISSD -	
SURFACE TREATMT -		DATE REQD -	
IDENT METHOD TAG			
PROJECT NUMBER N/A			
PROJECT NAME N/A			
DWG BY D. OSHATZ		DATE 05-Nov-02	
CHK BY S. VIROSTEK		DATE 12-Nov-02	
APR BY D. OSHATZ		DATE 12-Nov-02	

ERNEST ORLANDO LAWRENCE
BERKELEY NATIONAL LABORATORY
UNIVERSITY OF CALIFORNIA - BERKELEY

LHC IR FEEDBOX
CRYOGENICS
XB THRUST PLATE ASSY

MICROFILMED:	DWG. TYPE	SHOWN ON	SCALE: 1/2	DO NOT SCALE PRINTS
	ASSEM	-	SHEET 1 OF 1	
PATENT CLEAR:	DESIGN ACCT. NO.	CATEGORY CODE	DWG. NO. 25M9234	SIZE / REV. A
	Z5LCE2	LC2003		

Dwg. File: 25M923 Model File: 25M923