NOTES: (UNLESS OTHERWISE SPECIFIED)

1. THIS IS A CRYOGENIC VACUUM COMPONENT.
2. CLEANING PROCEDURE : PER VENDOR SPECIFICATION WITH LBNL APPROVAL.
3. PACKAGING AND STORAGE PROCEDURE OF THE COMPONENTS: PER VENDOR SPCIFICATION WITH LBNL APPROVAL.
4. DIMENSIONS AND TOLERANCING PER ANSI Y14.5M-1982. UNITS ARE IN INCHES UNLESS OTHERWISE SPECIFIED.
5. USE OF SULFUR OR SILICONE BEARING OILS, LUBRICANTS, OR COOLANTS ARE STRICTLY PROHIBITED.
6. USE OF RESIN OR RUBBER BONDED ABRASIVES UNDER POWER IS STRICTLY PROHIBITED. USE VITREOUS BONDED ABRASIVES ONLY.
7. PART IS PARALLEL TO PLANE OF REINFORCEMENT.

ITEM	PART NO	REQD	DESCRIPTION	MATERIAL
7	-	1	THREADED ROD	B8M STRN.HRD.316 SS
5	-	1	THREADED ROD	B8M STRN.HRD.316 SS
4	-	1	THERMAL BREAK, TUBE	NEMA G-10
3	-	2	LOCK WASHER, 3/8	SS
2	-	3	JAM NUT, 3/8-16 UNC	ST 18-8
1	-	2	DOWEL PIN, 1/8", 5/8LG., MCMASTER #98380A472, OR EQUIV.	SS 416, HARDENED

7

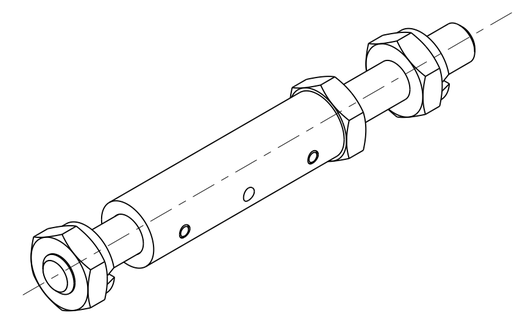

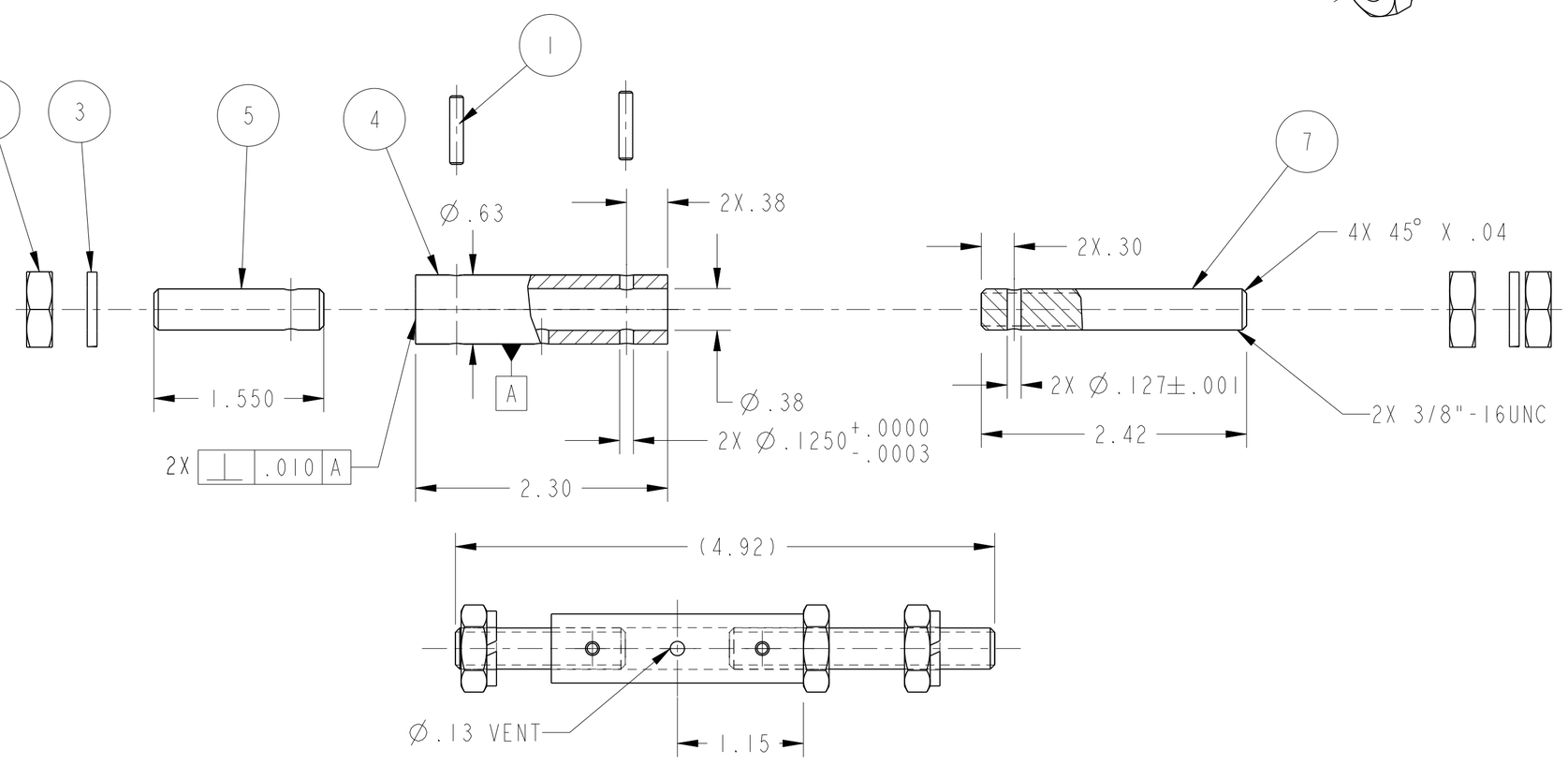

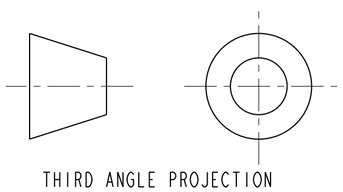

THIRD ANGLE PROJECTION

REV	DWG	CHK	ZONE	DATE	CHANGES
A	MJK	DPO		11/6/02	INITIAL RELEASE

UNLESS OTHERWISE SPECIFIED

TOLERANCES		
	X.X ± 0.1	FRAC. ± 1/64
	X.XX ± 0.02	Angles ± 1.00°
	X.XXX ± 0.005	FINISH 125 (μin)

DO NOT SCALE PRINT

THREADS ARE CLASS 2
CHAMFER ENDS OF ALL SCREW TREADS 30°
CUT ROUND, 1.5 THREAD RELIEF ON MACHINED THREADS
BREAK EDGES .016 MAX. ON MACHINED WORK
REMOVE BURRS, WELD SPLATTER & LOOSE SCALE
IN ACCORDANCE WITH ASME Y14.5M & B46.1

SHOP ORDERS

ACCT NO.	NO. REQD	SER NO.	-
DEL TO		DATE ISSD	-
SURFACE TREATMT	-	DATE REQD	-
IDENT METHOD	TAG		
PROJECT NUMBER	N/A		
PROJECT NAME	N/A		
DWG BY	OSHATZ	DATE	NOV.4,02
CHK BY	KNOLLS	DATE	NOV.6,02
APR BY	D OSHATZ	DATE	NOV.6,02

N/A (logo)

ERNEST ORLANDO LAWRENCE BERKELEY NATIONAL LABORATORY
UNIVERSITY OF CALIFORNIA - BERKELEY

LHC IR FEEDBOX
CRYOGENICS
THRUST SUPPORT WITH THERMAL BREAK

MICROFILMED:	DWG. TYPE	SHOWN ON	SCALE: 1.000	DO NOT SCALE PRINTS
	ASSEM	-	SHEET 1 OF 1	
PATENT CLEAR:	DESIGN ACCT. NO.	CATEGORY CODE	DWG. NO. SIZE	REV.
	Z5LCE3	LH2003	25M9223	A

DWG. NO. 25M9223 SIZE A REV. 1 SH. 1

Dwg. File: 25M922 Model File: 25M922